Precision, Wide Bandwidth 3-Port Isolation Amplifier

AD210

FEATURES

High CMV Isolation: 2500 V rms Continuous
±3500 V Peak Continuous
Small Size: 1.00" × 2.10" × 0.350"
Three-Port Isolation: Input, Output, and Power
Low Nonlinearity: ±0.012% max
Wide Bandwidth: 20 kHz Full-Power (–3 dB)
Low Gain Drift: ±25 ppm/°C max
High CMR: 120 dB (G = 100 V/V)
Isolated Power: ±15 V @ ±5 mA
Uncommitted Input Amplifier

APPLICATIONS

Multichannel Data Acquisition
High Voltage Instrumentation Amplifier
Current Shunt Measurements
Process Signal Isolation

FUNCTIONAL BLOCK DIAGRAM

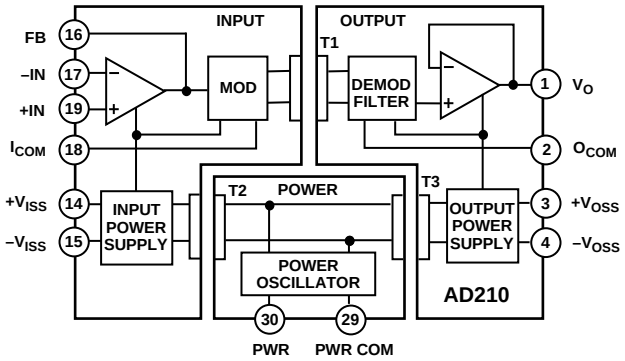

GENERAL DESCRIPTION

The AD210 is the latest member of a new generation of low cost, high performance isolation amplifiers. This three-port, wide bandwidth isolation amplifier is manufactured with surface-mounted components in an automated assembly process. The AD210 combines design expertise with state-of-the-art manufacturing technology to produce an extremely compact and economical isolator whose performance and abundant user features far exceed those offered in more expensive devices.

The AD210 provides a complete isolation function with both signal and power isolation supplied via transformer coupling internal to the module. The AD210's functionally complete design, powered by a single +15 V supply, eliminates the need for an external DC/DC converter, unlike optically coupled isolation devices. The true three-port design structure permits the AD210 to be applied as an input or output isolator, in single or multichannel applications. The AD210 will maintain its high performance under sustained common-mode stress.

Providing high accuracy and complete galvanic isolation, the AD210 interrupts ground loops and leakage paths, and rejects common-mode voltage and noise that may other vise degrade measurement accuracy. In addition, the AD210 provides protection from fault conditions that may cause damage to other sections of a measurement system.

PRODUCT HIGHLIGHTS

The AD210 is a full-featured isolator providing numerous user benefits including:

High Common-Mode Performance: The AD210 provides 2500 V rms (Continuous) and ± 3500 V peak (Continuous) common-mode voltage isolation between any two ports. Low input capacitance of 5 pF results in a 120 dB CMR at a gain of 100, and a low leakage current (2 µA rms max @ 240 V rms, 60 Hz).

High Accuracy: With maximum nonlinearity of ±0.012% (B Grade), gain drift of ±25 ppm/°C max and input offset drift of (±10 ±30/G) µV/°C, the AD210 assures signal integrity while providing high level isolation.

Wide Bandwidth: The AD210's full-power bandwidth of 20 kHz makes it useful for wideband signals. It is also effective in applications like control loops, where limited bandwidth could result in instability.

Small Size: The AD210 provides a complete isolation function in a small DIP package just 1.00" × 2.10" × 0.350". The low profile DIP package allows application in 0.5" card racks and assemblies. The pinout is optimized to facilitate board layout while maintaining isolation spacing between ports.

Three-Port Design: The AD210's three-port design structure allows each port (Input, Output, and Power) to remain independent. This three-port design permits the AD210 to be used as an input or output isolator. It also provides additional system protection should a fault occur in the power source.

Isolated Power: ±15 V @ 5 mA is available at the input and output sections of the isolator. This feature permits the AD210 to excite floating signal conditioners, front-end amplifiers and remote transducers at the input as well as other circuitry at the output.

Flexible Input: An uncommitted operational amplifier is provided at the input. This amplifier provides buffering and gain as required and facilitates many alternative input functions as required by the user.

REV. A

Information furnished by Analog Devices is believed to be accurate and reliable. However, no responsibility is assumed by Analog Devices for its use, nor for any infringements of patents or other rights of third parties which may result from its use. No license is granted by implication or otherwise under any patent or patent rights of Analog Devices.

One Technology Way, P.O. Box 9106, Norwood, MA 02062-9106, U.S.A.
Tel: 617/329-4700 **Fax: 617/326-8703**

AD210–SPECIFICATIONS (typical @ +25°C, and V_S = +15 V unless otherwise noted)

Model	AD210AN	AD210BN	AD210JN
GAIN			
Range	1 V/V – 100 V/V	*	*
Error	±2% max	±1% max	*
vs. Temperature(0°C to +70°C)	+25 ppm/°C max	*	*
(–25°C to +85°C)	±50 ppm/°C max	*	*
vs. Supply Voltage	±0.002%/V	*	*
Nonlinearity[1]	±0.025% max	±0.012% max	*
INPUT VOLTAGE RATINGS			
Linear Differential Range	±10 V	*	*
Maximum Safe Differential Input	±15 V	*	*
Max. CMV Input-to-Output	*		
ac, 60 Hz, Continuous	2500 V rms	*	1500 V rms
dc, Continuous	±3500 V peak	*	±2000 V peak
Common-Mode Rejection	*		
60 Hz, G = 100 V/V	*		
$R_S \leq 500\ \Omega$ Impedance Imbalance	120 dB	*	*
Leakage Current Input-to-Output	*		
@ 240 V rms, 60 Hz	2 µA rms max	*	*
INPUT IMPEDANCE			
Differential	$10^{12}\ \Omega$	*	*
Common Mode	5 GΩ‖5 pF	*	*
INPUT BIAS CURRENT			
Initial, @ +25°C	30 pA typ (400 pA max)	*	*
vs. Temperature (0°C to +70°C)	10 nA max	*	*
(–25°C to +85°C)	30 nA max	*	*
INPUT DIFFERENCE CURRENT			
Initial, @ +25°C	5 pA typ (200 pA max)	*	*
vs. Temperature(0°C to + 70°C)	2 nA max	*	*
(–25°C to +85°C)	10 nA max	*	*
INPUT NOISE			
Voltage (1 kHz)	18 nV/√Hz	*	*
(10 Hz to 10 kHz)	4 µV rms	*	*
Current (1 kHz)	0.01 pA/√Hz	*	*
FREQUENCY RESPONSE			
Bandwidth (–3 dB)	*		
G = 1 V/V	20 kHz	*	*
G = 100 V/V	15 kHz	*	*
Settling Time (±10 mV, 20 V Step)	*		
G = 1 V/V	150 µs	*	*
G = 100 V/V	500 µs	*	*
Slew Rate (G = 1 V/V)	1 V/µs	*	*
OFFSET VOLTAGE (RTI)[2]			
Initial, @ +25°C	±15 ±45/G) mV max	(±5 ±15/G) mV max	*
vs. Temperature (0°C to +70°C)	(±10 ±30/G) µV/°C	*	*
(–25°C to +85°C)	(±10 ±50/G) µV/°C	*	*
RATED OUTPUT[3]			
Voltage, 2 kΩ Load	±10 V min	*	*
Impedance	1 Ω max	*	*
Ripple (Bandwidth = 100 kHz)	10 mV p-p max	*	*
ISOLATED POWER OUTPUTS[4]			
Voltage, No Load	±15 V	*	*
Accuracy	±10%	*	*
Current	±5 mA	*	*
Regulation, No Load to Full Load	See Text	*	*
Ripple	See Text	*	*
POWER SUPPLY			
Voltage, Rated Performance	+15 V dc ± 5%	*	*
Voltage, Operating	+15 V dc ± 10%	*	*
Current, Quiescent	50 mA	*	*
Current, Full Load – Full Signal	80 mA	*	*
TEMPERATURE RANGE			
Rated Performance	–25°C to +85°C	*	*
Operating	–40°C to +85°C	*	*
Storage	–40°C to +85°C	*	*
PACKAGE DIMENSIONS			
Inches	1.00 × 2.10 × 0.350	*	*
Millimeters	25.4 × 53.3 × 8.9	*	*

NOTES
*Specifications same as AD210AN.
[1]Nonlinearity is specified as a % deviation from a best straight line..
[2]RTI – Referred to Input.
[3]A reduced signal swing is recommended when both $\pm V_{ISS}$ and $\pm V_{OSS}$ supplies are fully loaded, due to supply voltage reduction.
[4]See text for detailed information.
Specifications subject to change without notice.

OUTLINE DIMENSIONS

Dimensions shown in inches and (mm).

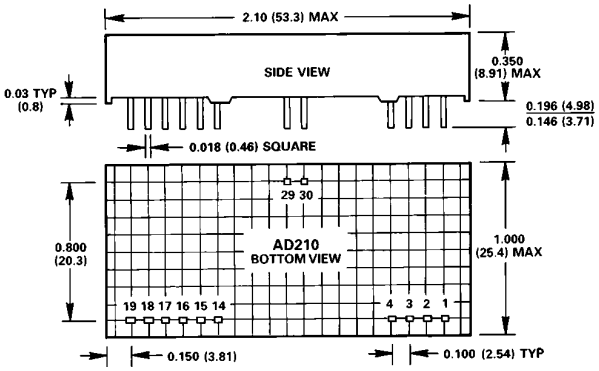

AC1059 MATING SOCKET

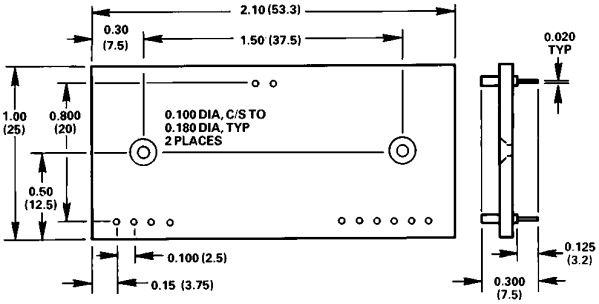

AD210 PIN DESIGNATIONS

Pin	Designation	Function
1	V_O	Output
2	O_{COM}	Output Common
3	$+V_{OSS}$	+Isolated Power @ Output
4	$-V_{OSS}$	–Isolated Power @ Output
14	$+V_{ISS}$	+Isolated Power @ Input
15	$-V_{ISS}$	–Isolated Power @ Input
16	FB	Input Feedback
17	–IN	–Input
18	I_{COM}	Input Common
19	+IN	+Input
29	Pwr Com	Power Common
30	Pwr	Power Input

CAUTION

ESD (electrostatic discharge) sensitive device. Electrostatic charges as high as 4000 V readily accumulate on the human body and test equipment and can discharge without detection. Although the AD210 features proprietary ESD protection circuitry, permanent damage may occur on devices subjected to high energy electrostatic discharges. Therefore, proper ESD precautions are recommended to avoid performance degradation or loss of functionality.

INSIDE THE AD210

The AD210 basic block diagram is illustrated in Figure 1. A +15 V supply is connected to the power port, and ±15 V isolated power is supplied to both the input and output ports via a 50 kHz carrier frequency. The uncommitted input amplifier can be used to supply gain or buffering of input signals to the AD210. The fullwave modulator translates the signal to the carrier frequency for application to transformer T1. The synchronous demodulator in the output port reconstructs the input signal. A 20 kHz, three-pole filter is employed to minimize output noise and ripple. Finally, an output buffer provides a low impedance output capable of driving a 2 kΩ load.

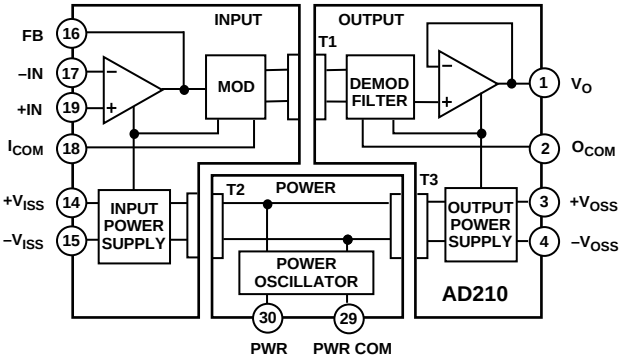

Figure 1. AD210 Block Diagram

USING THE AD210

The AD210 is very simple to apply in a wide range of applications. Powered by a single +15 V power supply, the AD210 will provide outstanding performance when used as an input or output isolator, in single and multichannel configurations.

Input Configurations: The basic unity gain configuration for signals up to ±10 V is shown in Figure 2. Additional input amplifier variations are shown in the following figures. For smaller signal levels Figure 3 shows how to obtain gain while maintaining a very high input impedance.

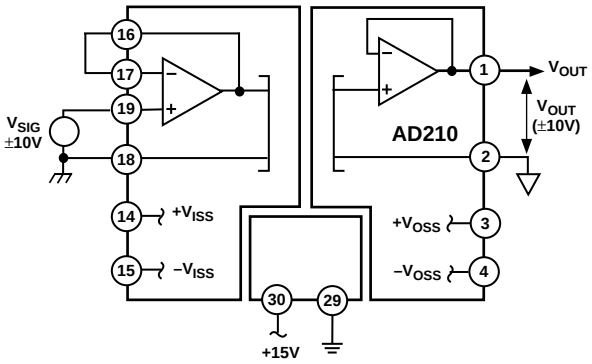

Figure 2. Basic Unity Gain Configuration

The high input impedance of the circuits in Figures 2 and 3 can be maintained in an inverting application. Since the AD210 is a three-port isolator, either the input leads or the output leads may be interchanged to create the signal inversion.

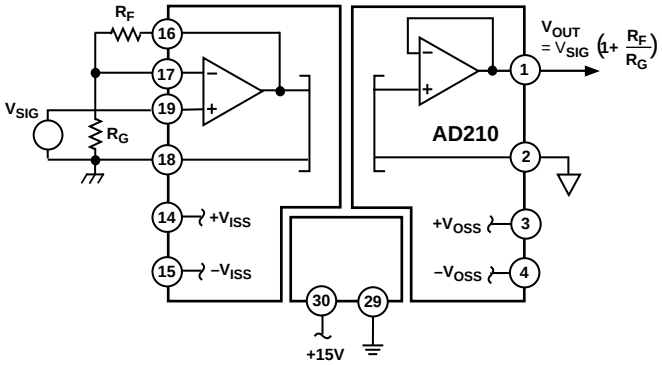

Figure 3. Input Configuration for G > 1

Figure 4 shows how to accommodate current inputs or sum currents or voltages. This circuit configuration can also be used for signals greater than ±10 V. For example, a ±100 V input span can be handled with R_F = 20 kΩ and R_{S1} = 200 kΩ.

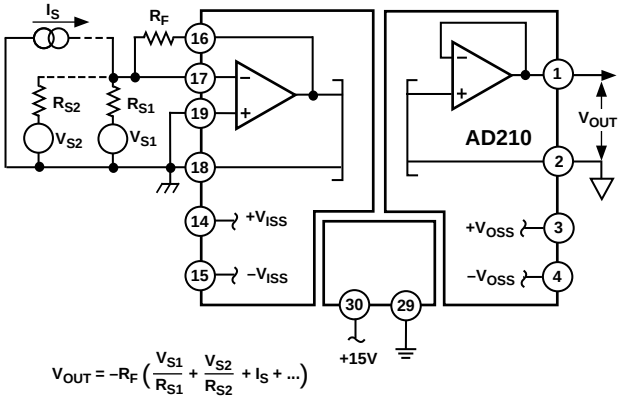

Figure 4. Summing or Current Input Configuration

Adjustments

When gain and offset adjustments are required, the actual circuit adjustment components will depend on the choice of input configuration and whether the adjustments are to be made at the isolator's input or output. Adjustments on the output side might be used when potentiometers on the input side would represent a hazard due to the presence of high common-mode voltage during adjustment. Offset adjustments are best done at the input side, as it is better to null the offset ahead of the gain.

Figure 5 shows the input adjustment circuit for use when the input amplifier is configured in the noninverting mode. This offset adjustment circuit injects a small voltage in series with the

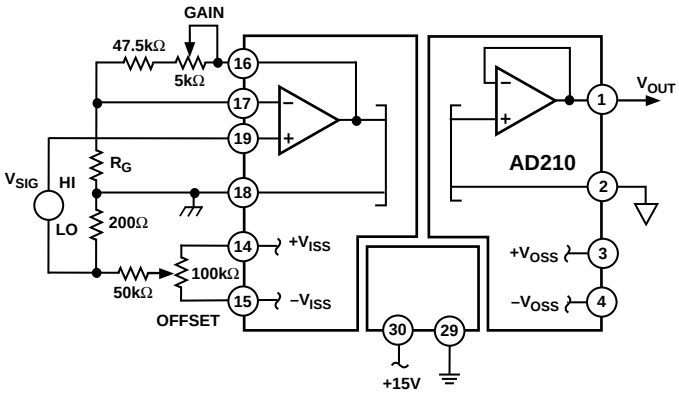

Figure 5. Adjustments for Noninverting Input

low side of the signal source. This will not work if the source has another current path to input common or if current flows in the signal source LO lead. To minimize CMR degradation, keep the resistor in series with the input LO below a few hundred ohms.

Figure 5 also shows the preferred gain adjustment circuit. The circuit shows R_F of 50 kΩ, and will work for gains of ten or greater. The adjustment becomes less effective at lower gains (its effect is halved at G = 2) so that the pot will have to be a larger fraction of the total R_F at low gain. At G = 1 (follower) the gain cannot be adjusted downward without compromising input impedance; it is better to adjust gain at the signal source or after the output.

Figure 6 shows the input adjustment circuit for use when the input amplifier is configured in the inverting mode. The offset adjustment nulls the voltage at the summing node. This is preferable to current injection because it is less affected by subsequent gain adjustment. Gain adjustment is made in the feedback and will work for gains from 1 V/V to 100 V/V.

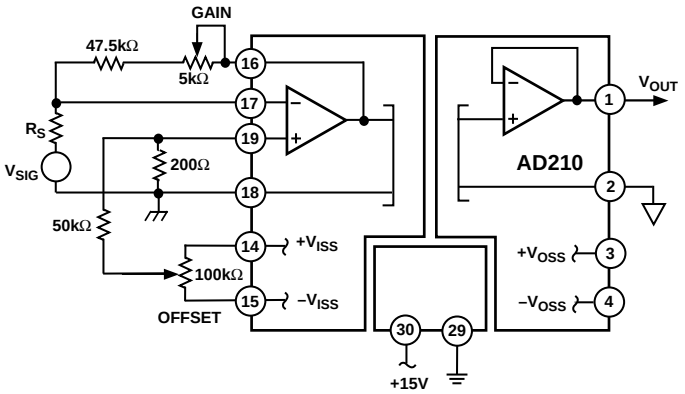

Figure 6. Adjustments for Inverting Input

Figure 7 shows how offset adjustments can be made at the output, by offsetting the floating output port. In this circuit, ±15 V would be supplied by a separate source. The AD210's output amplifier is fixed at unity, therefore, output gain must be made in a subsequent stage.

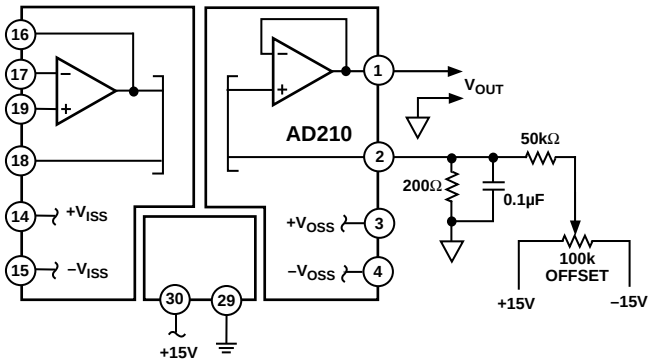

Figure 7. Output-Side Offset Adjustment

PCB Layout for Multichannel Applications: The unique pinout positioning minimizes board space constraints for multichannel applications. Figure 8 shows the recommended printed circuit board layout for a noninverting input configuration with gain.

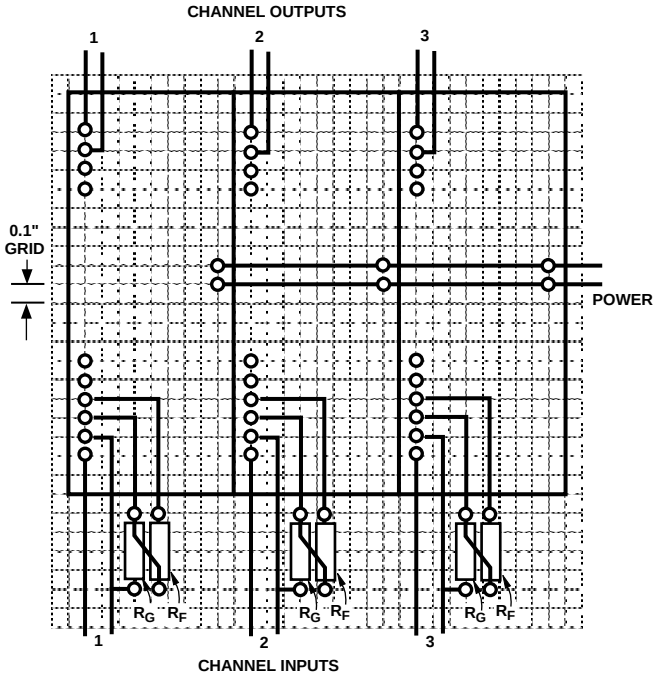

Figure 8. PCB Layout for Multichannel Applications with Gain

Synchronization: The AD210 is insensitive to the clock of an adjacent unit, eliminating the need to synchronize the clocks. However, in rare instances channel to channel pick-up may occur if input signal wires are bundled together. If this happens, shielded input cables are recommended.

PERFORMANCE CHARACTERISTICS

Common-Mode Rejection: Figure 9 shows the common-mode rejection of the AD210 versus frequency, gain and input source resistance. For maximum common-mode rejection of unwanted signals, keep the input source resistance low and carefully lay out the input, avoiding excessive stray capacitance at the input terminals.

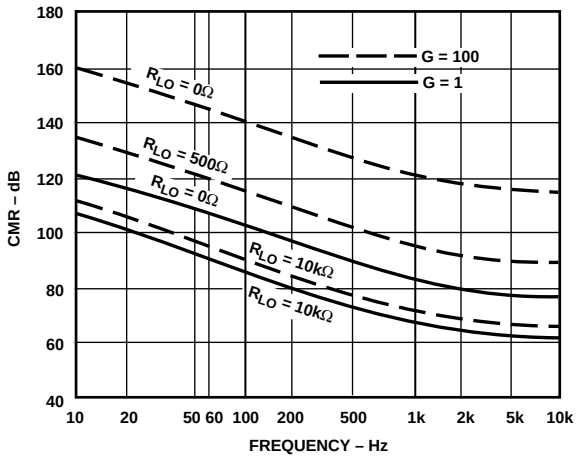

Figure 9. Common-Mode Rejection vs. Frequency

Phase Shift: Figure 10 illustrates the AD210's low phase shift and gain versus frequency. The AD210's phase shift and wide bandwidth performance make it well suited for applications like power monitors and controls systems.

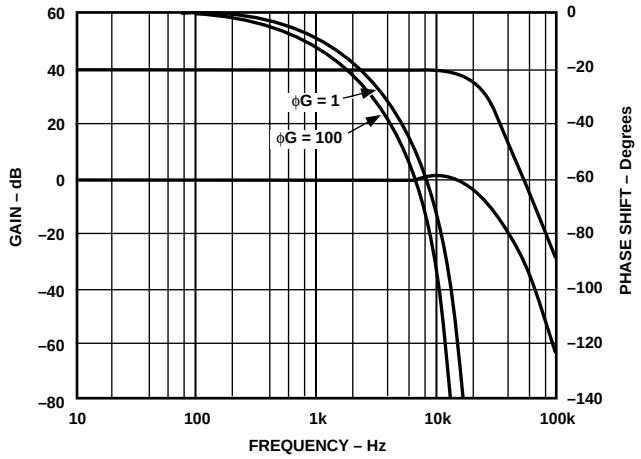

Figure 10. Phase Shift and Gain vs. Frequency

Input Noise vs. Frequency: Voltage noise referred to the input is dependent on gain and signal bandwidth. Figure 11 illustrates the typical input noise in nV/√Hz of the AD210 for a frequency range from 10 to 10 kHz.

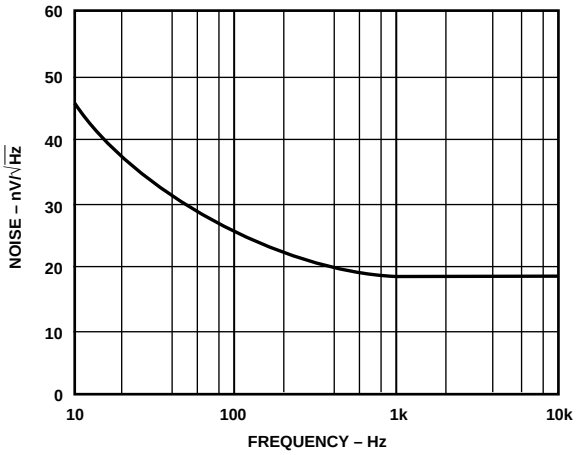

Figure 11. Input Noise vs. Frequency

Gain Nonlinearity vs. Output: Gain nonlinearity is defined as the deviation of the output voltage from the best straight line, and is specified as % peak-to-peak of output span. The AD210B provides guaranteed maximum nonlinearity of ±0.012% with an output span of ±10 V. The AD210's nonlinearity performance is shown in Figure 12.

Gain Nonlinearity vs. Output Swing: The gain nonlinearity of the AD210 varies as a function of total signal swing. When the output swing is less than 20 volts, the gain nonlinearity as a fraction of signal swing improves. The shape of the nonlinearity remains constant. Figure 13 shows the gain nonlinearity of the AD210 as a function of total signal swing.

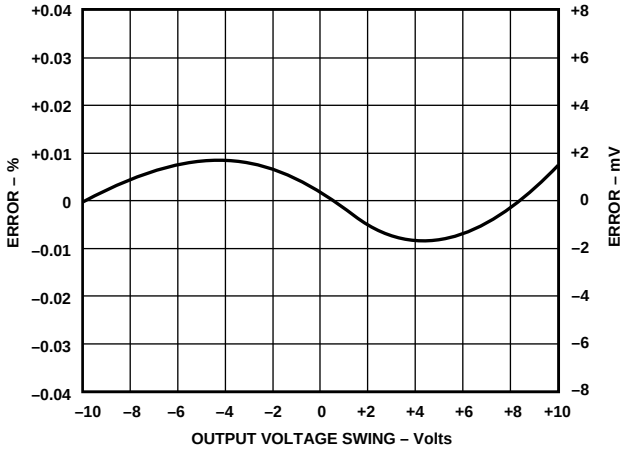

Figure 12. Gain Nonlinearity Error vs. Output

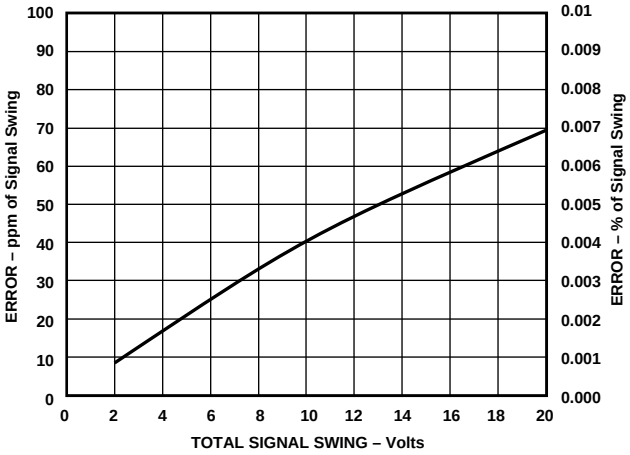

Figure 13. Gain Nonlinearity vs. Output Swing

Gain vs. Temperature: Figure 14 illustrates the AD210's gain vs. temperature performance. The gain versus temperature performance illustrated is for an AD210 configured as a unity gain amplifier.

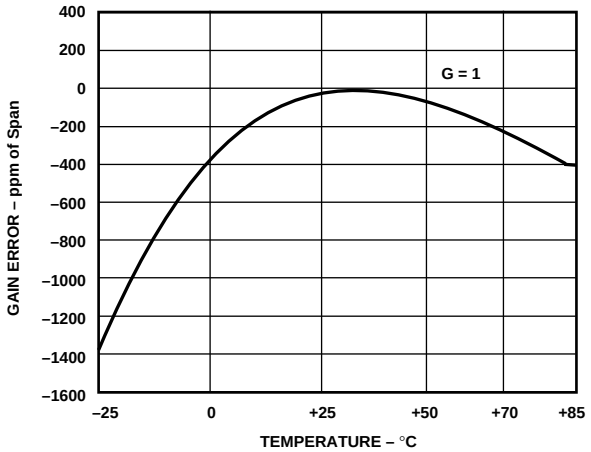

Figure 14. Gain vs. Temperature

Isolated Power: The AD210 provides isolated power at the input and output ports. This power is useful for various signal conditioning tasks. Both ports are rated at a nominal ±15 V at 5 mA.

The load characteristics of the isolated power supplies are shown in Figure 15. For example, when measuring the load rejection of the input isolated supplies V_{ISS}, the load is placed between $+V_{ISS}$ and $-V_{ISS}$. The curves labeled V_{ISS} and V_{OSS} are the individual load rejection characteristics of the input and the output supplies, respectively.

There is also some effect on either isolated supply when loading the other supply. The curve labeled CROSSLOAD indicates the sensitivity of either the input or output supplies as a function of the load on the opposite supply.

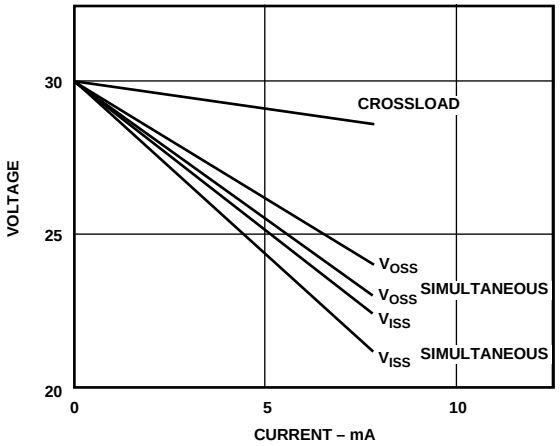

Figure 15. Isolated Power Supplies vs. Load

Lastly, the curves labeled V_{OSS} simultaneous and V_{ISS} simultaneous indicate the load characteristics of the isolated power supplies when an equal load is placed on both supplies.

The AD210 provides short circuit protection for its isolated power supplies. When either the input supplies or the output supplies are shorted to input common or output common, respectively, no damage will be incurred, even under continuous application of the short. However, the AD210 may be damaged if the input and output supplies are shorted simultaneously.

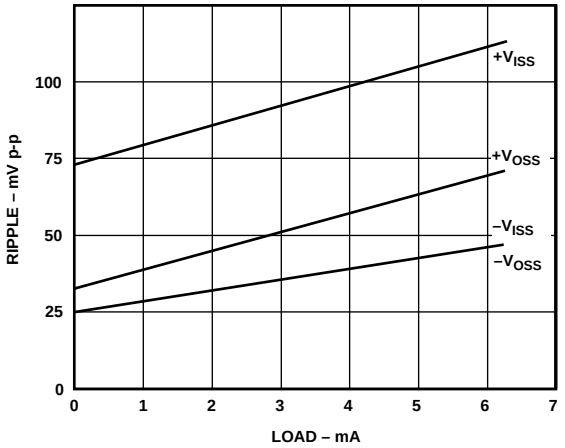

Figure 16a. Isolated Supply Ripple vs. Load (External 4.7 µF Bypass)

Under any circumstances, care should be taken to ensure that the power supplies do not accidentally become shorted.

The isolated power supplies exhibit some ripple which varies as a function of load. Figure 16a shows this relationship. The AD210 has internal bypass capacitance to reduce the ripple to a point where performance is not affected, even under full load. Since the internal circuitry is more sensitive to noise on the negative supplies, these supplies have been filtered more heavily. Should a specific application require more bypassing on the isolated power supplies, there is no problem with adding external capacitors. Figure 16b depicts supply ripple as a function of external bypass capacitance under full load.

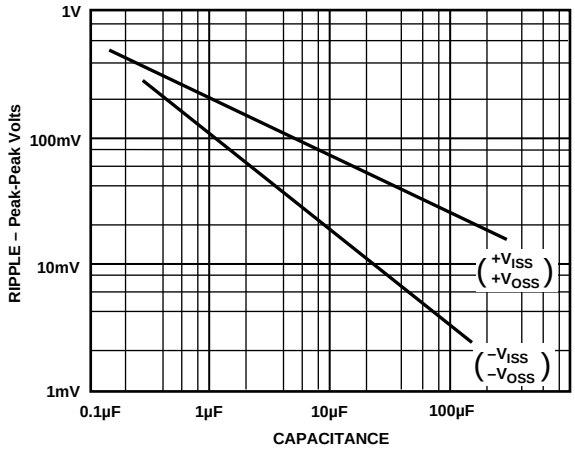

Figure 16b. Isolated Power Supply Ripple vs. Bypass Capacitance (Volts p-p, 1 MHz Bandwidth, 5 mA Load)

APPLICATIONS EXAMPLES

Noise Reduction in Data Acquisition Systems: Transformer coupled isolation amplifiers must have a carrier to pass both ac and dc signals through their signal transformers. Therefore, some carrier ripple is inevitably passed through to the isolator output. As the bandwidth of the isolator is increased more of the carrier signal will be present at the output. In most cases, the ripple at the AD210's output will be insignificant when compared to the measured signal. However, in some applications, particularly when a fast analog-to-digital converter is used following the isolator, it may be desirable to add filtering; otherwise ripple may cause inaccurate measurements. Figure 17 shows a circuit that will limit the isolator's bandwidth, thereby reducing the carrier ripple.

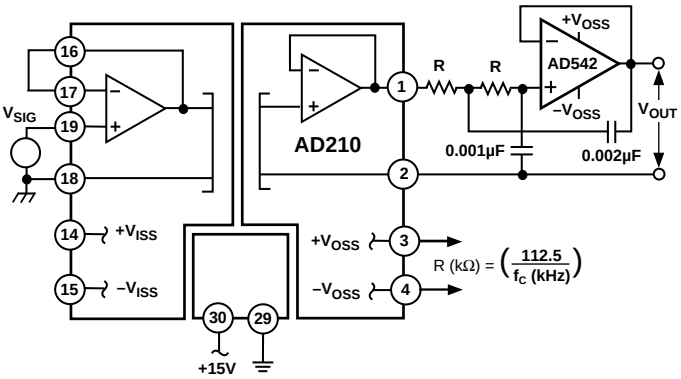

Figure 17. 2-Pole, Output Filter

Self-Powered Current Source

The output circuit shown in Figure 18 can be used to create a self-powered output current source using the AD210. The 2 kΩ resistor converts the voltage output of the AD210 to an equiva-

lent current $V_{OUT}/2$ kΩ. This resistor directly affects the output gain temperature coefficient, and must be of suitable stability for the application. The external low power op amp, powered by $+V_{OSS}$ and $-V_{OSS}$, maintains its summing junction at output common. All the current flowing through the 2 kΩ resistor flows through the output Darlington pass devices. A Darlington configuration is used to minimize loss of output current to the base.

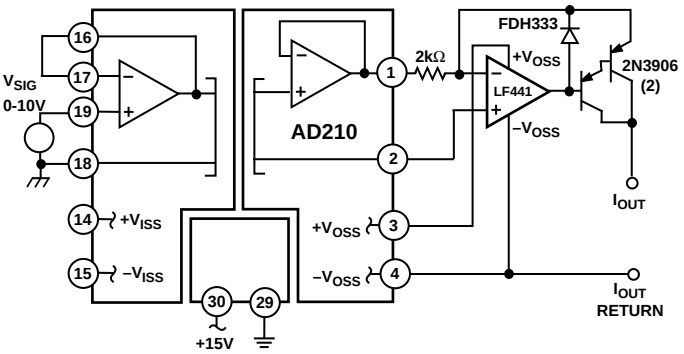

Figure 18. Self-Powered Isolated Current Source

The low leakage diode is used to protect the base-emitter junction against reverse bias voltages. Using $-V_{OSS}$ as a current return allows more than 10 V of compliance. Offset and gain control may be done at the input of the AD210 or by varying the 2 kΩ resistor and summing a small correction current directly into the summing node. A nominal range of 1 mA–5 mA is recommended since the current output cannot reach zero due to reverse bias and leakage currents. If the AD210 is powered from the input potential, this circuit provides a fully isolated, wide bandwidth current output. This configuration is limited to 5 mA output current.

Isolated V-to-I Converter

Illustrated in Figure 19, the AD210 is used to convert a 0 V to +10 V input signal to an isolated 4–20 mA output current. The AD210 isolates the 0 V to +10 V input signal and provides a proportional voltage at the isolator's output. The output circuit converts the input voltage to a 4–20 mA output current, which in turn is applied to the loop load R_{LOAD}.

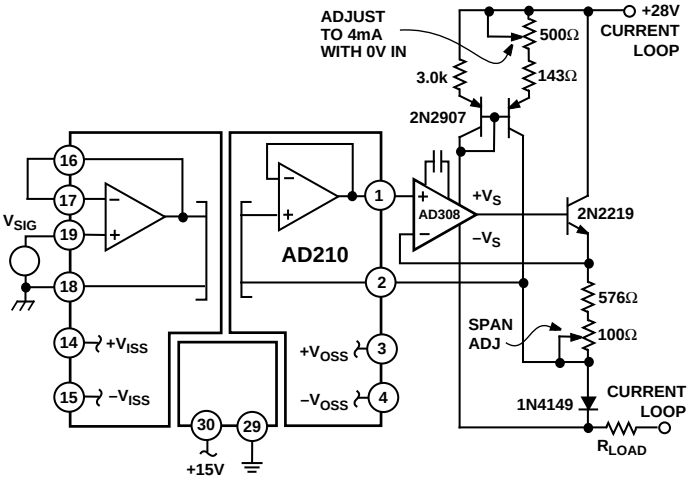

Figure 19. Isolated Voltage-to-Current Loop Converter

Isolated Thermocouple Amplifier

The AD210 application shown in Figure 20 provides amplification, isolation and cold-junction compensation for a standard J type thermocouple. The AD590 temperature sensor accurately monitors the input terminal (cold-junction). Ambient temperature changes from 0°C to +40°C sensed by the AD590, are cancelled out at the cold junction. Total circuit gain equals 183; 100 and 1.83, from A1 and the AD210 respectively. Calibration is performed by replacing the thermocouple junction with plain thermocouple wire and a millivolt source set at 0.0000 V (0°C) and adjusting R_O for E_{OUT} equal to 0.000 V. Set the millivolt source to +0.02185 V (400°C) and adjust R_G for V_{OUT} equal to +4.000 V. This application circuit will produce a nonlinearized output of about +10 mV/°C for a 0°C to +400°C range.

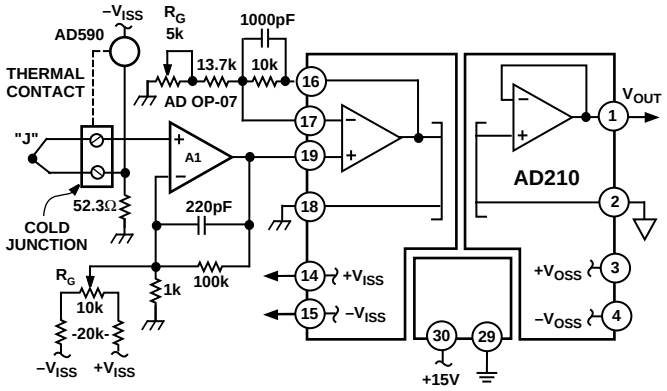

Figure 20. Isolated Thermocouple Amplifier

Precision Floating Programmable Reference

The AD210, when combined with a digital-to-analog converter, can be used to create a fully floating voltage output. Figure 21 shows one possible implementation.

The digital inputs of the AD7541 are TTL or CMOS compatible. Both the AD7541 and AD581 voltage reference are powered by the isolated power supply + V_{ISS}. I_{COM} should be tied to input digital common to provide a digital ground reference for the inputs.

The AD7541 is a current output DAC and, as such, requires an external output amplifier. The uncommitted input amplifier internal to the AD210 may be used for this purpose. For best results, its input offset voltage must be trimmed as shown.

The output voltage of the AD210 will go from 0 V to –10 V for digital inputs of 0 and full scale, respectively. However, since the output port is truly isolated, V_{OUT} and O_{COM} may be freely interchanged to get 0 V to +10 V.

This circuit provides a precision 0 V–10 V programmable reference with a ±3500 V common-mode range.

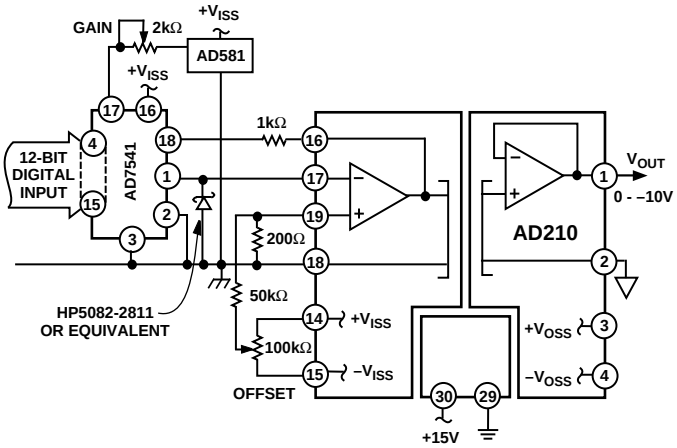

Figure 21. Precision Floating Programmable Reference

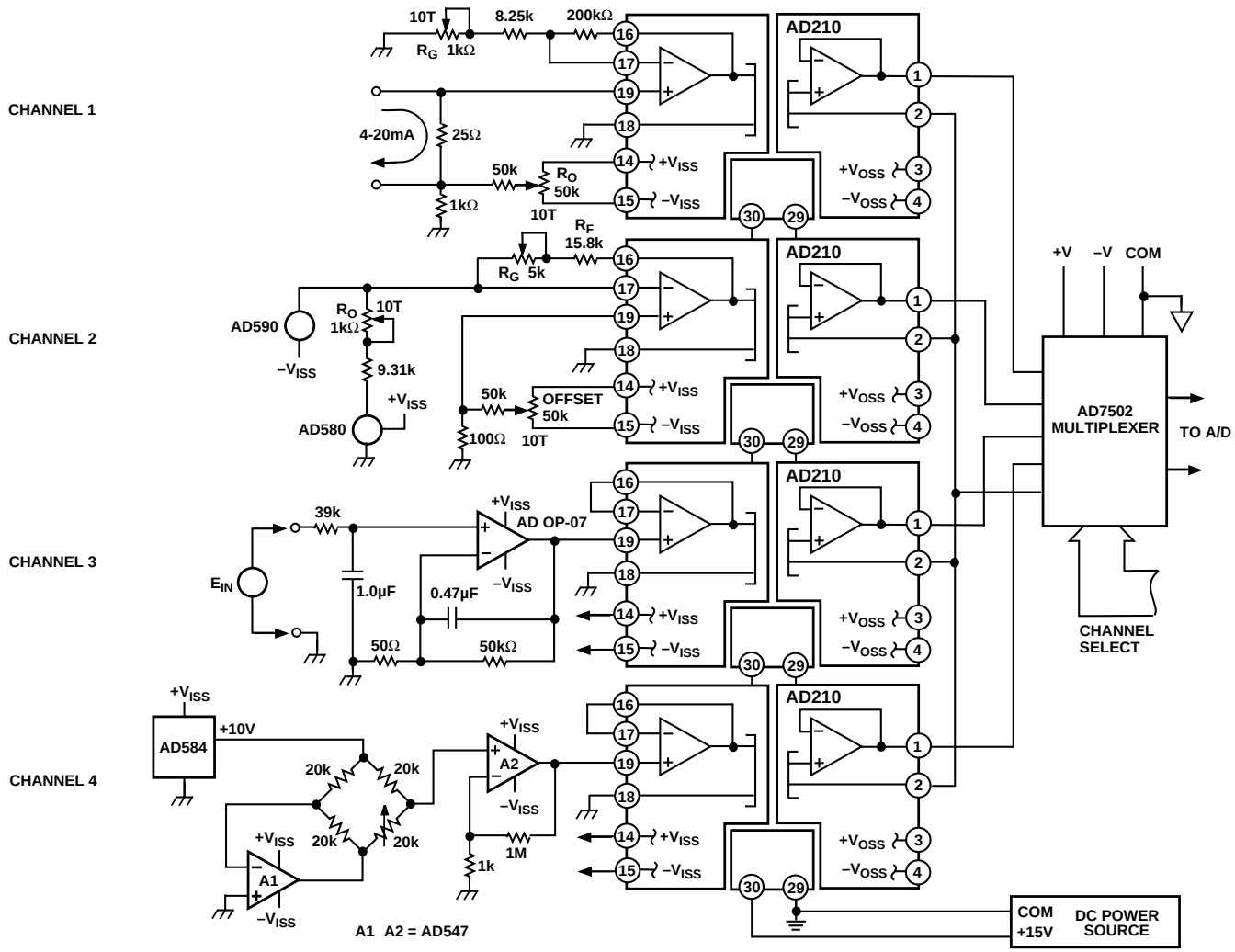

Figure 22. Multichannel Data Acquisition Front-End

MULTICHANNEL DATA ACQUISITION FRONT-END

Illustrated in Figure 22 is a four-channel data acquisition front-end used to condition and isolate several common input signals found in various process applications. In this application, each AD210 will provide complete isolation from input to output as well as channel to channel. By using an isolator per channel, maximum protection and rejection of unwanted signals is obtained. The three-port design allows the AD210 to be configured as an input or output isolator. In this application the isolators are configured as input devices with the power port providing additional protection from possible power source faults.

Channel 1: The AD210 is used to convert a 4–20 mA current loop input signal into a 0 V–10 V input. The 25 Ω shunt resistor converts the 4-20 mA current into a +100 mV to +500 mV signal. The signal is offset by –100 mV via R_O to produce a 0 mV to +400 mV input. This signal is amplified by a gain of 25 to produce the desired 0 V to +10 V output. With an open circuit, the AD210 will show –2.5 V at the output.

Channel 2: In this channel, the AD210 is used to condition and isolate a current output temperature transducer, Model AD590. At +25°C, the AD590 produces a nominal current of 298.2 µA. This level of current will change at a rate of 1 µA/°C. At –17.8°C (0°F), the AD590 current will be reduced by 42.8 µA to +255.4 µA. The AD580 reference circuit provides an equal but opposite current, resulting in a zero net current flow, producing a 0 V output from the AD210. At +100°C (+212°F), the AD590 current output will be 373.2 µA minus the 255.4 µA offsetting current from the AD580 circuit to yield a +117.8 µA input current. This current is converted to a voltage via R_F and R_G to produce an output of +2.12 V. Channel 2 will produce an output of +10 mV/°F over a 0°F to +212°F span.

Channel 3: Channel 3 is a low level input channel configured with a high gain amplifier used to condition millivolt signals. With the AD210's input set to unity and the input amplifier set for a gain of 1000, a ±10 mV input will produce a ±10 V at the AD210's output.

Channel 4: Channel 4 illustrates one possible configuration for conditioning a bridge circuit. The AD584 produces a +10 V excitation voltage, while A1 inverts the voltage, producing negative excitation. A2 provides a gain of 1000 V/V to amplify the low level bridge signal. Additional gain can be obtained by reconfiguration of the AD210's input amplifier. $\pm V_{ISS}$ provides the complete power for this circuit, eliminating the need for a separate isolated excitation source.

Each channel is individually addressed by the multiplexer's channel select. Additional filtering or signal conditioning should follow the multiplexer, prior to an analog-to-digital conversion stage.

C1005–9–9/86

PRINTED IN U.S.A.

Компания «ЭлектроПласт» предлагает заключение долгосрочных отношений при поставках импортных электронных компонентов на взаимовыгодных условиях!

Наши преимущества:

- Оперативные поставки широкого спектра электронных компонентов отечественного и импортного производства напрямую от производителей и с крупнейших мировых складов;
- Поставка более 17-ти миллионов наименований электронных компонентов;
- Поставка сложных, дефицитных, либо снятых с производства позиций;
- Оперативные сроки поставки под заказ (от 5 рабочих дней);
- Экспресс доставка в любую точку России;
- Техническая поддержка проекта, помощь в подборе аналогов, поставка прототипов;
- Система менеджмента качества сертифицирована по Международному стандарту ISO 9001;
- Лицензия ФСБ на осуществление работ с использованием сведений, составляющих государственную тайну;
- Поставка специализированных компонентов (Xilinx, Altera, Analog Devices, Intersil, Interpoint, Microsemi, Aeroflex, Peregrine, Syfer, Eurofarad, Texas Instrument, Miteq, Cobham, E2V, MA-COM, Hittite, Mini-Circuits,General Dynamics и др.);

Помимо этого, одним из направлений компании «ЭлектроПласт» является направление «Источники питания». Мы предлагаем Вам помощь Конструкторского отдела:

- Подбор оптимального решения, техническое обоснование при выборе компонента;
- Подбор аналогов;
- Консультации по применению компонента;
- Поставка образцов и прототипов;
- Техническая поддержка проекта;
- Защита от снятия компонента с производства.

Как с нами связаться

Телефон: 8 (812) 309 58 32 (многоканальный)
Факс: 8 (812) 320-02-42
Электронная почта: org@eplast1.ru
Адрес: 198099, г. Санкт-Петербург, ул. Калинина, дом 2, корпус 4, литера А.