Solid-Electrolyte TANTALEX® Capacitors, Hermetically-Sealed, Axial-Lead

FEATURES

- Terminations: Tin/lead (SnPb), 100 % tin (RoHS compliant)
- These high performance, hermetically-sealed TANTALEX® capacitors have set the standard for solid-electrolyte tantalum capacitors for more than three decades
- High capacitance, low DCL, low dissipation factor and exceptional operating stability
- Performance and reliability have been proven in commercial, industrial and military applications
- Available in four case codes and capacitors and are supplied with plastic-film insulation
- Terminals are solid, tinned nickel wire leads
- The military equivalent to the 150D is the M39003/01 (style CSR13) which is qualified to MIL-PRF-39003
- Material categorization: For definitions of compliance please see www.vishay.com/doc?99912

Pb Available
RoHS* COMPLIANT

Note
* Lead (Pb)-containing terminations are not RoHS-compliant. Exemptions may apply.

PERFORMANCE CHARACTERISTICS

Operating Temperature: - 55 °C to + 125 °C
(above 85 °C, voltage derating is required)

Capacitance Tolerance: At 120 Hz, + 25 °C
± 20 %, ± 10 % standard. ± 5 % available as special

Dissipation Factor: At 120 Hz, + 25 °C

DC Leakage Current (DCL Max.):

At + 25 °C: Leakage current shall not exceed the values listed in the Standard Ratings table

At + 85 °C: Leakage current shall not exceed 10 times the values listed in the Standard Ratings table

At + 125 °C: Leakage shall not exceed 15 times the values listed in the Standard Ratings table

Life Test: Capacitors shall withstand rated DC voltage applied at + 85 °C for 2000 h or derated DC voltage applied at + 125 °C for 1000 h

Following the life test:

1. DCL shall not exceed 125 % of the initial requirement
2. Dissipation factor shall meet the initial requirement
3. Change in capacitance shall not exceed ± 5 %

ORDERING INFORMATION

150D	224	X0	006	A	2	T	E3
MODEL	CAPACITANCE	CAPACITANCE TOLERANCE	DC VOLTAGE RATING AT 85 °C	CASE CODE	STYLE NUMBER	PACKAGING	RoHS COMPLIANT
	This is expressed in picofarads. The first two digits are the significant figures. The third is the number of zeros to follow.	X0 = ± 20 % X9 = ± 10 % X5 = ± 5 % * * Special order	This is expressed in volts. To complete the three-digit block, zeros precede the voltage rating.	See Ratings and Case Codes table	0 = No Sleeve 2 = Insulated sleeve	B = Bulk T = Tape and reel	E3 = 100 % tin termination (RoHS compliant) Blank = SnPb termination

For technical questions, contact: tantalum@vishay.com
THIS DOCUMENT IS SUBJECT TO CHANGE WITHOUT NOTICE. THE PRODUCTS DESCRIBED HEREIN AND THIS DOCUMENT ARE SUBJECT TO SPECIFIC DISCLAIMERS, SET FORTH AT www.vishay.com/doc?91000

DIMENSIONS in inches [millimeters]

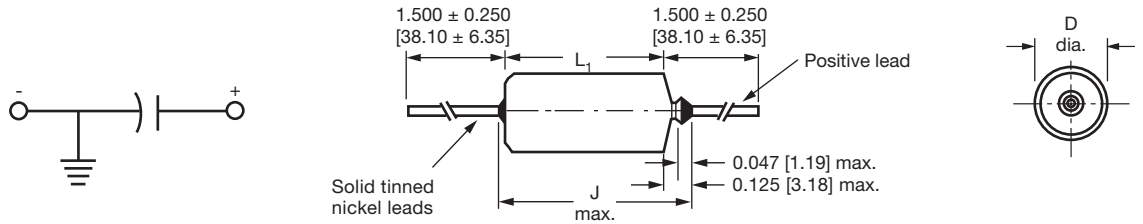

CASE CODE	D	L_1	J (MAXIMUM)	LEAD SIZE	
	WITH INSULATING SLEEVE (1)			AWG NO.	NOMINAL DIAMETER
A	0.135 ± 0.016 [3.43 ± 0.41]	0.286 ± 0.031 [7.26 ± 0.79]	0.422 [10.720]	24	0.020 [0.51]
B	0.185 ± 0.016 [4.70 ± 0.41]	0.474 ± 0.031 [12.04 ± 0.79]	0.610 [15.490]	24	0.020 [0.51]
R	0.289 ± 0.016 [7.34 ± 0.41]	0.686 ± 0.031 [17.42 ± 0.79]	0.822 [20.880]	22	0.025 [0.64]
S	0.351 ± 0.016 [8.92 ± 0.41]	0.786 ± 0.031 [19.96 ± 0.79]	0.922 [23.420]	22	0.025 [0.64]

Note

(1) When a shrink-fitted insulation is used, it shall lap over the ends of the capacitor body

STANDARD RATINGS

CAPACITANCE (µF)	CASE CODE	PART NUMBER	MAX. DCL AT + 25 °C (µA)	MAX. DF AT + 25 °C 120 Hz (%)
6 V_{DC} AT + 85 °C, SURGE = 8 V; 4 V_{DC} AT + 125 °C, SURGE = 5 V				
0.22	A	150D224(1)006A2	0.5	2
0.27	A	150D274(1)006A2	0.5	2
0.33	A	150D334(1)006A2	0.5	2
0.39	A	150D394(1)006A2	0.5	2
0.47	A	150D474(1)006A2	0.5	2
0.56	A	150D564(1)006A2	0.5	2
0.68	A	150D684(1)006A2	0.5	2
0.82	A	150D824(1)006A2	0.5	2
1.0	A	150D105(1)006A2	0.5	2
1.2	A	150D125(1)006A2	0.5	4
1.5	A	150D155(1)006A2	0.5	4
1.8	A	150D185(1)006A2	0.5	4
2.2	A	150D225(1)006A2	0.5	4
2.7	A	150D275(1)006A2	0.5	4
3.3	A	150D335(1)006A2	0.5	4
3.9	A	150D395(1)006A2	0.5	4
4.7	A	150D475(1)006A2	0.5	4
5.6	A	150D565(1)006A2	0.5	4
6.8	A	150D685(1)006A2	0.5	6
8.2	B	150D825(1)006B2	0.5	6
10	B	150D106(1)006B2	0.5	6
12	B	150D126(1)006B2	0.5	6
15	B	150D156(1)006B2	1.0	6
18	B	150D186(1)006B2	1.0	6

Note

- Part number definitions:
  (1) For 10 % tolerance specify X9; for 20 % specify “X0”; for 5 % “X5” (special order)

For technical questions, contact: tantalum@vishay.com
THIS DOCUMENT IS SUBJECT TO CHANGE WITHOUT NOTICE. THE PRODUCTS DESCRIBED HEREIN AND THIS DOCUMENT ARE SUBJECT TO SPECIFIC DISCLAIMERS, SET FORTH AT www.vishay.com/doc?91000

STANDARD RATINGS

CAPACITANCE (µF)	CASE CODE	PART NUMBER	MAX. DCL AT + 25 °C (µA)	MAX. DF AT + 25 °C 120 Hz (%)
6 V_{DC} AT + 85 °C, SURGE = 8 V; 4 V_{DC} AT + 125 °C, SURGE = 5 V				
22	B	150D226(1)006B2	1.0	6
27	B	150D276(1)006B2	1.0	6
33	B	150D336(1)006B2	1.0	6
39	B	150D396(1)006B2	1.0	6
47	B	150D476(1)006B2	2.0	6
56	B	150D566(1)006B2	2.0	6
68	R	150D686(1)006R2	3.0	6
82	R	150D826(1)006R2	3.0	6
100	R	150D107(1)006R2	3.0	6
120	R	150D127(1)006R2	3.0	6
150	R	150D157(1)006R2	6.0	6
180	R	150D187(1)006R2	6.0	6
220	S	150D227(1)006S2	6.0	8
270	S	150D277(1)006S2	6.0	8
330	S	150D337(1)006S2	10.0	8
10 V_{DC} AT + 85 °C, SURGE = 13 V; 7 V_{DC} AT + 125 °C, SURGE = 9 V				
0.22	A	150D224(1)010A2	0.5	2
0.27	A	150D274(1)010A2	0.5	2
0.33	A	150D334(1)010A2	0.5	2
0.39	A	150D394(1)010A2	0.5	2
0.47	A	150D474(1)010A2	0.5	2
0.56	A	150D564(1)010A2	0.5	2
0.68	A	150D684(1)010A2	0.5	2
0.82	A	150D824(1)010A2	0.5	2
1.0	A	150D105(1)010A2	0.5	2
1.2	A	150D125(1)010A2	0.5	4
1.5	A	150D155(1)010A2	0.5	4
1.8	A	150D185(1)010A2	0.5	4
2.2	A	150D225(1)010A2	0.5	4
2.7	A	150D275(1)010A2	0.5	4
3.3	A	150D335(1)010A2	0.5	4
3.9	A	150D395(1)010A2	0.5	4
4.7	A	150D475(1)010A2	0.5	4
5.6	B	150D565(1)010B2	0.5	4
6.8	B	150D685(1)010B2	1.0	6
8.2	B	150D825(1)010B2	1.0	6
10	B	150D106(1)010B2	1.0	6
12	B	150D126(1)010B2	1.0	6
15	B	150D156(1)010B2	1.0	6
18	B	150D186(1)010B2	1.0	6
22	B	150D226(1)010B2	2.0	6
27	B	150D276(1)010B2	2.0	6

Note

- Part number definitions:
  (1) For 10 % tolerance specify X9; for 20 % specify “X0”; for 5 % “X5” (special order)

For technical questions, contact: tantalum@vishay.com
THIS DOCUMENT IS SUBJECT TO CHANGE WITHOUT NOTICE. THE PRODUCTS DESCRIBED HEREIN AND THIS DOCUMENT ARE SUBJECT TO SPECIFIC DISCLAIMERS, SET FORTH AT www.vishay.com/doc?91000

STANDARD RATINGS

CAPACITANCE (µF)	CASE CODE	PART NUMBER	MAX. DCL AT + 25 °C (µA)	MAX. DF AT + 25 °C 120 Hz (%)
10 V_{DC} AT + 85 °C, SURGE = 13 V; 7 V_{DC} AT + 125 °C, SURGE = 9 V				
33	B	150D336(1)010B2	2.0	6
39	B	150D396(1)010B2	2.0	6
47	R	150D476(1)010R2	3.0	6
56	R	150D566(1)010R2	3.0	6
68	R	150D686(1)010R2	3.0	6
82	R	150D826(1)010R2	3.0	6
100	R	150D107(1)010R2	6.0	6
120	R	150D127(1)010R2	6.0	6
150	S	150D157(1)010S2	10.0	6
180	S	150D187(1)010S2	10.0	6
220	S	150D227(1)010S2	10.0	8
15 V_{DC} AT + 85 °C, SURGE = 20 V; 10 V_{DC} AT + 125 °C, SURGE = 12 V				
0.22	A	150D224(1)015A2	0.5	2
0.27	A	150D274(1)015A2	0.5	2
0.33	A	150D334(1)015A2	0.5	2
0.39	A	150D394(1)015A2	0.5	2
0.47	A	150D474(1)015A2	0.5	2
0.56	A	150D564(1)015A2	0.5	2
0.68	A	150D684(1)015A2	0.5	2
0.82	A	150D824(1)015A2	0.5	2
1.0	A	150D105(1)015A2	0.5	2
1.2	A	150D125(1)015A2	0.5	4
1.5	A	150D155(1)015A2	0.5	4
1.8	A	150D185(1)015A2	0.5	4
2.2	A	150D225(1)015A2	0.5	4
2.7	A	150D275(1)015A2	0.5	4
3.3	A	150D335(1)015A2	0.5	4
3.9	B	150D395(1)015B2	0.5	4
4.7	B	150D475(1)015B2	1.0	4
5.6	B	150D565(1)015B2	1.0	4
6.8	B	150D685(1)015B2	1.0	6
8.2	B	150D825(1)015B2	1.0	6
10	B	150D106(1)015B2	1.0	6
12	B	150D126(1)015B2	1.0	6
15	B	150D156(1)015B2	2.0	6
18	B	150D186(1)015B2	2.0	6
22	B	150D226(1)015B2	3.0	6
27	R	150D276(1)015R2	3.0	6
33	R	150D336(1)015R2	3.0	6
39	R	150D396(1)015R2	3.0	6
47	R	150D476(1)015R2	6.0	6
56	R	150D566(1)015R2	6.0	6

Note

- Part number definitions:
  (1) For 10 % tolerance specify X9; for 20 % specify “X0”; for 5 % “X5” (special order)

For technical questions, contact: tantalum@vishay.com
THIS DOCUMENT IS SUBJECT TO CHANGE WITHOUT NOTICE. THE PRODUCTS DESCRIBED HEREIN AND THIS DOCUMENT ARE SUBJECT TO SPECIFIC DISCLAIMERS, SET FORTH AT www.vishay.com/doc?91000

STANDARD RATINGS				
CAPACITANCE (µF)	CASE CODE	PART NUMBER	MAX. DCL AT + 25 °C (µA)	MAX. DF AT + 25 °C 120 Hz (%)
15 V_{DC} AT + 85 °C, SURGE = 20 V; 10 V_{DC} AT + 125 °C, SURGE = 12 V				
68	R	150D686(1)015R2	6.0	6
82	S	150D826(1)015S2	6.0	6
100	S	150D107(1)015S2	6.0	6
120	S	150D127(1)015S2	6.0	6
150	S	150D157(1)015S2	10.0	6
20 V_{DC} AT + 85 °C, SURGE = 26 V; 13 V_{DC} AT + 125 °C, SURGE = 16 V				
0.033	A	150D333(1)020A2	0.1	2
0.039	A	150D393(1)020A2	0.1	2
0.047	A	150D473(1)020A2	0.1	2
0.056	A	150D563(1)020A2	0.1	2
0.068	A	150D683(1)020A2	0.1	2
0.082	A	150D823(1)020A2	0.1	2
0.10	A	150D104(1)020A2	0.5	2
0.12	A	150D124(1)020A2	0.5	2
0.15	A	150D154(1)020A2	0.5	2
0.18	A	150D184(1)020A2	0.5	2
0.22	A	150D224(1)020A2	0.5	2
0.27	A	150D274(1)020A2	0.5	2
0.33	A	150D334(1)020A2	0.5	2
0.39	A	150D394(1)020A2	0.5	2
0.47	A	150D474(1)020A2	0.5	2
0.56	A	150D564(1)020A2	0.5	2
0.68	A	150D684(1)020A2	0.5	2
0.82	A	150D824(1)020A2	0.5	2
1.0	A	150D105(1)020A2	0.5	2
1.2	A	150D125(1)020A2	0.5	4
1.5	A	150D155(1)020A2	0.5	4
1.8	A	150D185(1)020A2	0.5	4
2.2	A	150D225(1)020A2	0.5	4
2.7	B	150D275(1)020B2	0.5	4
3.3	B	150D335(1)020B2	0.5	4
3.9	B	150D395(1)020B2	1.0	4
4.7	B	150D475(1)020B2	1.0	4
5.6	B	150D565(1)020B2	1.0	4
6.8	B	150D685(1)020B2	1.0	6
8.2	B	150D825(1)020B2	1.0	6
10	B	150D106(1)020B2	1.0	6
12	B	150D126(1)020B2	1.0	6
15	B	150D156(1)020B2	2.0	6
18	R	150D186(1)020R2	3.0	6
22	R	150D226(1)020R2	3.0	6
27	R	150D276(1)020R2	3.0	6

Note

- Part number definitions:
  (1) For 10 % tolerance specify X9; for 20 % specify “X0”; for 5 % “X5” (special order)

For technical questions, contact: tantalum@vishay.com
THIS DOCUMENT IS SUBJECT TO CHANGE WITHOUT NOTICE. THE PRODUCTS DESCRIBED HEREIN AND THIS DOCUMENT ARE SUBJECT TO SPECIFIC DISCLAIMERS, SET FORTH AT www.vishay.com/doc?91000

STANDARD RATINGS

CAPACITANCE (µF)	CASE CODE	PART NUMBER	MAX. DCL AT + 25 °C (µA)	MAX. DF AT + 25 °C 120 Hz (%)
20 V_{DC} AT + 85 °C, SURGE = 26 V; 13 V_{DC} AT + 125 °C, SURGE = 16 V				
33	R	150D336(1)020R2	3.0	6
39	R	150D396(1)020R2	3.0	6
47	R	150D476(1)020R2	6.0	6
56	S	150D566(1)020S2	6.0	6
68	S	150D686(1)020S2	6.0	6
82	S	150D826(1)020S2	6.0	6
100	S	150D107(1)020S2	10.0	6
25 V_{DC} AT + 85 °C, SURGE = 32 V; 17 V_{DC} AT + 125 °C, SURGE = 21 V				
1.2	A	150D125(1)025A2	0.5	4
1.5	A	150D155(1)025A2	0.5	4
1.8	A	150D185(1)025A2	0.5	4
4.7	B	150D475(1)025B2	1.2	4
5.6	B	150D565(1)025B2	1.4	4
6.8	B	150D685(1)025B2	1.7	4
8.2	B	150D825(1)025B2	2.1	4
10	B	150D106(1)025B2	2.5	6
15	B	150D156(1)025B2	3.8	6
33	R	150D336(1)025R2	8.3	6
68	S	150D686(1)025S2	17	6
100	S	150D107(1)025S2	25	6
35 V_{DC} AT + 85 °C, SURGE = 46 V; 23 V_{DC} AT + 125 °C, SURGE = 28 V				
0.033	A	150D333(1)035A2	0.1	2
0.039	A	150D393(1)035A2	0.1	2
0.047	A	150D473(1)035A2	0.1	2
0.056	A	150D563(1)035A2	0.1	2
0.068	A	150D683(1)035A2	0.1	2
0.082	A	150D823(1)035A2	0.1	2
0.10	A	150D104(1)035A2	0.5	2
0.12	A	150D124(1)035A2	0.5	2
0.15	A	150D154(1)035A2	0.5	2
0.18	A	150D184(1)035A2	0.5	2
0.22	A	150D224(1)035A2	0.5	2
0.27	A	150D274(1)035A2	0.5	2
0.33	A	150D334(1)035A2	0.5	2
0.39	A	150D394(1)035A2	0.5	2
0.47	A	150D474(1)035A2	0.5	2
0.56	A	150D564(1)035A2	0.5	2
0.68	A	150D684(1)035A2	0.5	2
0.82	A	150D824(1)035A2	0.5	2
1.0	A	150D105(1)035A2	0.5	2
1.2	B	150D125(1)035B2	0.5	4
1.5	B	150D155(1)035B2	0.5	4

Note

- Part number definitions:
  (1) For 10 % tolerance specify X9; for 20 % specify “X0”; for 5 % “X5” (special order)

For technical questions, contact: tantalum@vishay.com
THIS DOCUMENT IS SUBJECT TO CHANGE WITHOUT NOTICE. THE PRODUCTS DESCRIBED HEREIN AND THIS DOCUMENT ARE SUBJECT TO SPECIFIC DISCLAIMERS, SET FORTH AT www.vishay.com/doc?91000

STANDARD RATINGS				
CAPACITANCE (µF)	CASE CODE	PART NUMBER	MAX. DCL AT + 25 °C (µA)	MAX. DF AT + 25 °C 120 Hz (%)
35 V_{DC} AT + 85 °C, SURGE = 46 V; 23 V_{DC} AT + 125 °C, SURGE = 28 V				
1.8	B	150D185(1)035B2	0.5	4
2.2	B	150D225(1)035B2	1.0	4
2.7	B	150D275(1)035B2	1.0	4
3.3	B	150D335(1)035B2	1.0	4
3.9	B	150D395(1)035B2	1.0	4
4.7	B	150D475(1)035B2	1.0	4
5.6	B	150D565(1)035B2	1.0	4
6.8	B	150D685(1)035B2	2.0	4
8.2	R	150D825(1)035R2	3.0	4
10	R	150D106(1)035R2	3.0	4
12	R	150D126(1)035R2	3.0	4
15	R	150D156(1)035R2	3.0	4
18	R	150D186(1)035R2	3.0	4
22	R	150D226(1)035R2	6.0	4
27	S	150D276(1)035S2	6.0	4
33	S	150D336(1)035S2	6.0	4
39	S	150D396(1)035S2	6.0	4
47	S	150D476(1)035S2	10.0	4
50 V_{DC} AT + 85 °C, SURGE = 65 V; 33 V_{DC} AT + 125 °C, SURGE = 40 V				
0.056	A	150D563(1)050A2	0.1	2
0.068	A	150D683(1)050A2	0.1	2
0.082	A	150D823(1)050A2	0.1	2
0.10	A	150D104(1)050A2	0.5	2
0.12	A	150D124(1)050A2	0.5	2
0.15	A	150D154(1)050A2	0.5	2
0.18	A	150D184(1)050A2	0.5	2
0.22	A	150D224(1)050A2	0.5	2
0.27	A	150D274(1)050A2	0.5	2
0.33	A	150D334(1)050A2	0.5	2
0.39	A	150D394(1)050A2	0.5	2
0.47	A	150D474(1)050A2	0.5	2
0.56	A	150D564(1)050A2	0.5	2
0.68	A	150D684(1)050A2	0.5	2
0.82	A	150D824(1)050A2	0.5	2
1.0	A	150D105(1)050A2	0.5	2
1.2	B	150D125(1)050B2	0.5	4
1.5	B	150D155(1)050B2	0.5	4
1.8	B	150D185(1)050B2	0.5	4
2.2	B	150D225(1)050B2	1.0	4
2.7	B	150D275(1)050B2	1.0	4
3.3	B	150D335(1)050B2	2.0	4
3.9	B	150D395(1)050B2	2.0	4

Note

- Part number definitions:
  (1) For 10 % tolerance specify X9; for 20 % specify “X0”; for 5 % “X5” (special order)

For technical questions, contact: tantalum@vishay.com
THIS DOCUMENT IS SUBJECT TO CHANGE WITHOUT NOTICE. THE PRODUCTS DESCRIBED HEREIN AND THIS DOCUMENT ARE SUBJECT TO SPECIFIC DISCLAIMERS, SET FORTH AT www.vishay.com/doc?91000

STANDARD RATINGS				
CAPACITANCE (µF)	CASE CODE	PART NUMBER	MAX. DCL AT + 25 °C (µA)	MAX. DF AT + 25 °C 120 Hz (%)
50 V_{DC} AT + 85 °C, SURGE = 65 V; 33 V_{DC} AT + 125 °C, SURGE = 40 V				
4.7	B	150D475(1)050B2	3.0	4
5.6	R	150D565(1)050R2	3.0	4
6.8	R	150D685(1)050R2	3.0	4
8.2	R	150D825(1)050R2	3.0	4
10	R	150D106(1)050R2	3.0	4
12	R	150D126(1)050R2	3.0	4
15	R	150D156(1)050R2	6.0	4
18	R	150D186(1)050R2	6.0	4
22	S	150D226(1)050S2	6.0	4
60 V_{DC} AT + 85 °C, SURGE = 78 V; 40 V_{DC} AT + 125 °C, SURGE = 49 V				
0.10	A	150D104(1)060A2	0.5	4.0
0.12	A	150D124(1)060A2	0.5	4.0
0.15	A	150D154(1)060A2	0.5	4.0
0.18	A	150D184(1)060A2	0.5	4.0
0.22	A	150D224(1)060A2	0.5	4.0
0.27	A	150D274(1)060A2	0.5	4.0
0.33	A	150D334(1)060A2	0.5	4.0
0.39	A	150D394(1)060A2	0.5	4.0
0.47	A	150D474(1)060A2	0.5	4.0
0.56	A	150D564(1)060A2	0.5	4.0
0.68	A	150D684(1)060A2	0.5	4.0
1.0	B	150D105(1)060B2	0.5	4.0
2.2	B	150D225(1)060B2	1.0	4.0
4.7	R	150D475(1)060R2	3.0	6.0
5.6	R	150D565(1)060R2	3.0	6.0
6.8	R	150D685(1)060R2	4.0	6.0
8.2	R	150D825(1)060R2	5.0	6.0
10	R	150D106(1)060R2	6.0	6.0
12	S	150D126(1)060S2	6.0	6.0
15	S	150D156(1)060S2	9.0	6.0
18	S	150D186(1)060S2	10.0	6.0
22	S	150D226(1)060S2	12.0	6.0
75 V_{DC} AT + 85 °C, SURGE = 98 V; 50 V_{DC} AT + 125 °C, SURGE = 64 V				
0.033	A	150D333(1)075A2	0.5	2
0.039	A	150D393(1)075A2	0.5	2
0.047	A	150D473(1)075A2	0.5	2
0.056	A	150D563(1)075A2	0.5	2
0.068	A	150D683(1)075A2	0.5	2
0.082	A	150D823(1)075A2	0.5	2
0.10	A	150D104(1)075A2	0.5	2
0.12	A	150D124(1)075A2	0.5	2
0.15	A	150D154(1)075A2	0.5	2

Note

- Part number definitions:
  (1) For 10 % tolerance specify X9; for 20 % specify “X0”; for 5 % “X5” (special order)

For technical questions, contact: tantalum@vishay.com
THIS DOCUMENT IS SUBJECT TO CHANGE WITHOUT NOTICE. THE PRODUCTS DESCRIBED HEREIN AND THIS DOCUMENT ARE SUBJECT TO SPECIFIC DISCLAIMERS, SET FORTH AT www.vishay.com/doc?91000

STANDARD RATINGS

CAPACITANCE (µF)	CASE CODE	PART NUMBER	MAX. DCL AT + 25 °C (µA)	MAX. DF AT + 25 °C 120 Hz (%)
75 V_{DC} AT + 85 °C, SURGE = 98 V; 50 V_{DC} AT + 125 °C, SURGE = 64 V				
0.18	A	150D184(1)075A2	0.5	2
0.22	A	150D224(1)075A2	0.5	2
0.27	A	150D274(1)075A2	0.5	2
0.33	A	150D334(1)075A2	0.5	2
0.39	A	150D394(1)075A2	0.5	2
0.47	A	150D474(1)075A2	0.5	2
0.56	A	150D564(1)075A2	0.5	2
0.68	A	150D684(1)075A2	0.5	2
0.82	B	150D824(1)075B2	0.5	2
1.0	B	150D105(1)075B2	0.5	2
1.2	B	150D125(1)075B2	0.5	4
1.5	B	150D155(1)075B2	1.0	4
1.8	B	150D185(1)075B2	1.0	4
2.2	B	150D225(1)075B2	1.0	4
2.7	B	150D275(1)075B2	1.0	4
3.3	B	150D335(1)075B2	2.0	4
3.9	B	150D395(1)075B2	2.0	4
4.7	R	150D475(1)075R2	4.0	4
5.6	R	150D565(1)075R2	4.0	4
6.8	R	150D685(1)075R2	6.0	4
8.2	R	150D825(1)075R2	6.0	4
10	R	150D106(1)075R2	8.0	4
12	S	150D126(1)075S2	10.0	4
15	S	150D156(1)075S2	12.0	4
100 V_{DC} AT + 85 °C, SURGE = 130 V; 67 V_{DC} AT + 125 °C, SURGE = 86 V				
0.033	A	150D333(1)100A2	0.5	2
0.039	A	150D393(1)100A2	0.5	2
0.047	A	150D473(1)100A2	0.5	2
0.056	A	150D563(1)100A2	0.5	2
0.068	A	150D683(1)100A2	0.5	2
0.082	A	150D823(1)100A2	0.5	2
0.10	A	150D104(1)100A2	0.5	2
0.12	A	150D124(1)100A2	0.5	2
0.15	A	150D154(1)100A2	0.5	2
0.18	A	150D184(1)100A2	0.5	2
0.22	A	150D224(1)100A2	0.5	2
0.27	A	150D274(1)100A2	0.5	2
0.33	A	150D334(1)100A2	0.5	2
0.39	A	150D394(1)100A2	0.5	2
0.47	A	150D474(1)100A2	0.5	2
0.56	A	150D564(1)100A2	0.5	2
0.68	B	150D684(1)100B2	0.5	2

Note

- Part number definitions:
  (1) For 10 % tolerance specify X9; for 20 % specify “X0”; for 5 % “X5” (special order)

For technical questions, contact: tantalum@vishay.com
THIS DOCUMENT IS SUBJECT TO CHANGE WITHOUT NOTICE. THE PRODUCTS DESCRIBED HEREIN AND THIS DOCUMENT ARE SUBJECT TO SPECIFIC DISCLAIMERS, SET FORTH AT www.vishay.com/doc?91000

STANDARD RATINGS

CAPACITANCE (µF)	CASE CODE	PART NUMBER	MAX. DCL AT + 25 °C (µA)	MAX. DF AT + 25 °C 120 Hz (%)
100 V_{DC} AT + 85 °C, SURGE = 130 V; 67 V_{DC} AT + 125 °C, SURGE = 86 V				
0.82	B	150D824(1)100B2	0.5	2
1.0	B	150D105(1)100B2	0.5	2
1.2	B	150D125(1)100B2	0.5	3
1.5	B	150D155(1)100B2	0.6	3
1.8	B	150D185(1)100B2	0.6	3
2.2	B	150D225(1)100B2	0.6	3
2.7	B	150D275(1)100B2	0.6	3
3.3	R	150D335(1)100R2	2.5	3
3.9	R	150D395(1)100R2	3.0	3
4.7	R	150D475(1)100R2	4.0	3
5.6	R	150D565(1)100R2	4.0	3
6.8	R	150D685(1)100R2	6.0	3
8.2	S	150D825(1)100S2	6.0	3
10	S	150D106(1)100S2	6.0	3
125 V_{DC} AT + 85 °C, SURGE = 140 V; 82 V_{DC} AT + 125 °C, SURGE = 94 V				
0.027	A	150D273(1)125A2	1.0	2
0.033	A	150D333(1)125A2	1.0	2
0.039	A	150D393(1)125A2	1.0	2
0.047	A	150D473(1)125A2	1.0	2
0.056	A	150D563(1)125A2	1.0	2
0.068	A	150D683(1)125A2	1.0	2
0.082	A	150D823(1)125A2	1.0	2
0.10	A	150D104(1)125A2	1.0	2
0.12	A	150D124(1)125A2	1.0	2
0.15	A	150D154(1)125A2	1.0	2
0.18	A	150D184(1)125A2	1.0	2
0.22	A	150D224(1)125A2	1.0	2
0.27	A	150D274(1)125A2	1.0	2
0.33	A	150D334(1)125A2	1.0	2
0.39	A	150D394(1)125A2	1.5	2
0.47	A	150D474(1)125A2	1.5	2
0.56	B	150D564(1)125B2	1.6	2
0.68	B	150D684(1)125B2	1.8	2
0.82	B	150D824(1)125B2	2.0	2
1.0	B	150D105(1)125B2	2.0	2
1.2	B	150D125(1)125B2	2.0	3
1.5	B	150D155(1)125B2	2.0	3
1.8	B	150D185(1)125B2	2.0	3
2.2	B	150D225(1)125B2	2.0	3

Note

- Part number definitions:
  (1) For 10 % tolerance specify X9; for 20 % specify “X0”; for 5 % “X5” (special order)

For technical questions, contact: tantalum@vishay.com
THIS DOCUMENT IS SUBJECT TO CHANGE WITHOUT NOTICE. THE PRODUCTS DESCRIBED HEREIN AND THIS DOCUMENT ARE SUBJECT TO SPECIFIC DISCLAIMERS, SET FORTH AT www.vishay.com/doc?91000

STANDARD REEL PACKAGING SPECIFICATIONS - MEETS EIA STANDARD RS-296 in inches [millimeters]

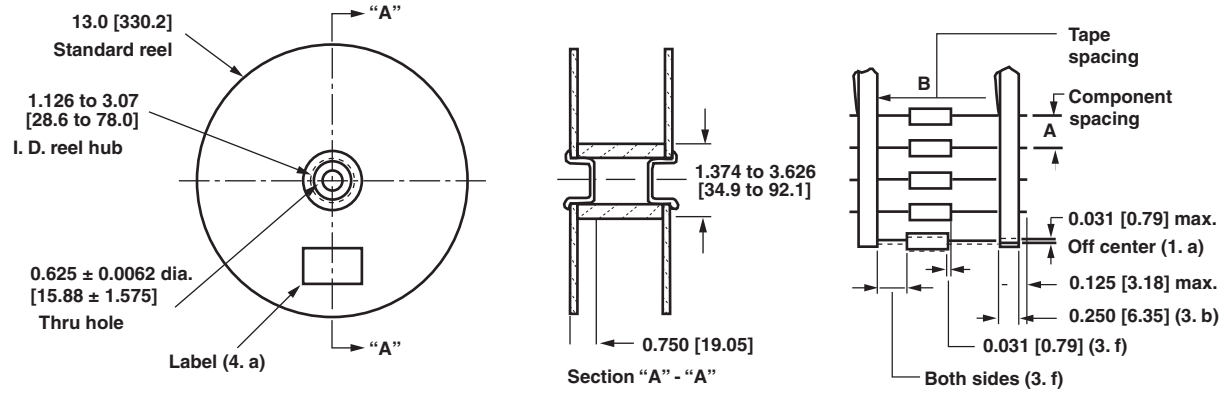

CASE CODE	TYPE 150D UNITS WITH INSULATING SLEEVE		LEAD SIZE		COMPONENT SPACING	TAPE SPACING	UNITS PER REEL
	D	L	AWG NO.	NOM. DIA.	A	B	
A	0.135 ± 0.016 [3.43 ± 0.41]	0.286 ± 0.031 [7.26 ± 0.79]	24	0.020 [0.51]	0.200 ± 0.015 [5.08 ± 0.38]	2.500 ± 0.062 [63.5 ± 1.57]	1000
B	0.185 ± 0.016 [4.70 ± 0.41]	0.474 ± 0.031 [12.04 ± 0.79]	24	0.020 [0.51]	0.200 ± 0.015 [5.08 ± 0.38]	2.500 ± 0.062 [63.5 ± 1.57]	1000
R	0.289 ± 0.016 [7.34 ± 0.41]	0.686 ± 0.031 [17.42 ± 0.79]	22	0.025 [0.64]	0.400 ± 0.015 [10.16 ± 0.38]	2.875 ± 0.062 [73.03 ± 1.57]	500
S	0.351 ± 0.016 [8.92 ± 0.41]	0.786 ± 0.031 [19.96 ± 0.79]	22	0.025 [0.64]	0.400 ± 0.015 [10.16 ± 0.38]	2.875 ± 0.062 [73.03 ± 1.57]	500

STANDARD REEL PACKAGING INFORMATION

1. Component Leads

a. Component leads shall not be bent beyond 0.047" [1.19 mm] maximum from their nominal position when measured from the leading edge of the component lead at the inside tape edge and at the lead egress from the component.

b. The "C" dimension shall be governed by the overall length of the reel packaged component. The distance between flanges shall be 0.125" to 0.250" [3.18 mm to 6.35 mm] greater than the overall component length.

2. Orientation

All polarized components must be oriented to one direction. The cathode lead tape shall be a color and the anode lead tape shall be white.

3. Reeling

a. Components on any reel shall not represent more than two date codes when date code identification is required.

b. Component leads shall be positioned between pairs of 0.250" [6.35 mm] tape.

c. The disposable reels have hubs and corrugated fibreboard flanges and core or equivalent.

d. A minimum of 12.0" [304.8 mm] leader of tape shall be provided before the first and after the last component on the reel.

e. 50 lb or 60 lb. Kraft paper must be wound between layer of components as far as necessary for component protection. Width of paper to be 0.062" to 0.250" [1.57 mm to 6.35 mm] less than the "C" dimension of the reel. Solid-electrolyte Tantalex® capacitors hermetically-sealed, axial-lead.

f. A row of components must be centered between tapes ± 0.047" [1.19 mm]. In addition, individual components may deviate from center of component row ± 0.031" [0.79 mm].

g. Staples shall not be used for splicing. Not more than 4 layers of tape shall be used in any splice area and no tape shall be offset from another by more than 0.031" [0.79 mm] non-cumulative. Tape splices shall overlap at least 6.0" [152.4 mm] for butt joints and at least 3.0" [76.2 mm] for lap joints and shall not be weaker than unspliced tape. Universal splicing clips may also be used.

h. Quantity per reel shall be controlled so that tape components and cover shall not extend beyond the smallest dimension of the flange (either across flats or diameter). Once the quantity per reel for each part number has been established, future orders for that part number shall be packaged in that quantity. When order or release quantity is less than the established quantity, a standard commercial pack is to be used.

i. A maximum of 0.25 % of the components per reel quantity may be missing without consecutive missing components.

j. Adequate protection must be provided to prevent physical damage to both reel and components during shipment and storage.

4. Marking

Minimum reel and carton marking shall consist of the following: Customer part number, purchase order no., quantity, package date, manufacturer's name, electrical value, date code, Vishay Sprague part number and country of origin.

For technical questions, contact: tantalum@vishay.com
THIS DOCUMENT IS SUBJECT TO CHANGE WITHOUT NOTICE. THE PRODUCTS DESCRIBED HEREIN AND THIS DOCUMENT ARE SUBJECT TO SPECIFIC DISCLAIMERS, SET FORTH AT www.vishay.com/doc?91000

Disclaimer

ALL PRODUCT, PRODUCT SPECIFICATIONS AND DATA ARE SUBJECT TO CHANGE WITHOUT NOTICE TO IMPROVE RELIABILITY, FUNCTION OR DESIGN OR OTHERWISE.

Vishay Intertechnology, Inc., its affiliates, agents, and employees, and all persons acting on its or their behalf (collectively, "Vishay"), disclaim any and all liability for any errors, inaccuracies or incompleteness contained in any datasheet or in any other disclosure relating to any product.

Vishay makes no warranty, representation or guarantee regarding the suitability of the products for any particular purpose or the continuing production of any product. To the maximum extent permitted by applicable law, Vishay disclaims (i) any and all liability arising out of the application or use of any product, (ii) any and all liability, including without limitation special, consequential or incidental damages, and (iii) any and all implied warranties, including warranties of fitness for particular purpose, non-infringement and merchantability.

Statements regarding the suitability of products for certain types of applications are based on Vishay's knowledge of typical requirements that are often placed on Vishay products in generic applications. Such statements are not binding statements about the suitability of products for a particular application. It is the customer's responsibility to validate that a particular product with the properties described in the product specification is suitable for use in a particular application. Parameters provided in datasheets and/or specifications may vary in different applications and performance may vary over time. All operating parameters, including typical parameters, must be validated for each customer application by the customer's technical experts. Product specifications do not expand or otherwise modify Vishay's terms and conditions of purchase, including but not limited to the warranty expressed therein.

Except as expressly indicated in writing, Vishay products are not designed for use in medical, life-saving, or life-sustaining applications or for any other application in which the failure of the Vishay product could result in personal injury or death. Customers using or selling Vishay products not expressly indicated for use in such applications do so at their own risk. Please contact authorized Vishay personnel to obtain written terms and conditions regarding products designed for such applications.

No license, express or implied, by estoppel or otherwise, to any intellectual property rights is granted by this document or by any conduct of Vishay. Product names and markings noted herein may be trademarks of their respective owners.

Material Category Policy

Vishay Intertechnology, Inc. hereby certifies that all its products that are identified as RoHS-Compliant fulfill the definitions and restrictions defined under Directive 2011/65/EU of The European Parliament and of the Council of June 8, 2011 on the restriction of the use of certain hazardous substances in electrical and electronic equipment (EEE) - recast, unless otherwise specified as non-compliant.

Please note that some Vishay documentation may still make reference to RoHS Directive 2002/95/EC. We confirm that all the products identified as being compliant to Directive 2002/95/EC conform to Directive 2011/65/EU.

Vishay Intertechnology, Inc. hereby certifies that all its products that are identified as Halogen-Free follow Halogen-Free requirements as per JEDEC JS709A standards. Please note that some Vishay documentation may still make reference to the IEC 61249-2-21 definition. We confirm that all the products identified as being compliant to IEC 61249-2-21 conform to JEDEC JS709A standards.

Компания «ЭлектроПласт» предлагает заключение долгосрочных отношений при поставках импортных электронных компонентов на взаимовыгодных условиях!

Наши преимущества:

- Оперативные поставки широкого спектра электронных компонентов отечественного и импортного производства напрямую от производителей и с крупнейших мировых складов;
- Поставка более 17-ти миллионов наименований электронных компонентов;
- Поставка сложных, дефицитных, либо снятых с производства позиций;
- Оперативные сроки поставки под заказ (от 5 рабочих дней);
- Экспресс доставка в любую точку России;
- Техническая поддержка проекта, помощь в подборе аналогов, поставка прототипов;
- Система менеджмента качества сертифицирована по Международному стандарту ISO 9001;
- Лицензия ФСБ на осуществление работ с использованием сведений, составляющих государственную тайну;
- Поставка специализированных компонентов (Xilinx, Altera, Analog Devices, Intersil, Interpoint, Microsemi, Aeroflex, Peregrine, Syfer, Eurofarad, Texas Instrument, Miteq, Cobham, E2V, MA-COM, Hittite, Mini-Circuits,General Dynamics и др.);

Помимо этого, одним из направлений компании «ЭлектроПласт» является направление «Источники питания». Мы предлагаем Вам помощь Конструкторского отдела:

- Подбор оптимального решения, техническое обоснование при выборе компонента;
- Подбор аналогов;
- Консультации по применению компонента;
- Поставка образцов и прототипов;
- Техническая поддержка проекта;
- Защита от снятия компонента с производства.

Как с нами связаться

Телефон: 8 (812) 309 58 32 (многоканальный)
Факс: 8 (812) 320-02-42
Электронная почта: org@eplast1.ru
Адрес: 198099, г. Санкт-Петербург, ул. Калинина, дом 2, корпус 4, литера А.