Last update: 2012.8.30 No.FCC-K-HTS-0003-12
(Uncontrolled copy)

Specification

(Reference)

Title: CHIP FUSE; RECTANGULAR TYPE

Style: FCC10,16,20,32, FHC10,16,20,32

RoHS COMPLIANCE ITEM

Product specification contained in this specification
are subject to change at any time without notice
If you have any questions or a Purchasing Specification for any quality
Agreement is necessary, please contact our sales staff.

釜屋電機株式會社
KAMAYA ELECTRIC CO., LTD.

Issue Dept.: Research & Development Department Hokkaido Research Center

1. Scope

1.1 This specification covers the detail requirements for chip fuses; rectangular type, style of FCC10,16,20,32, FHC10,16,20,32.

1.2 Applicable documents

UL248–1–2000 Low–Voltage Fuses–Part1: General Requirements
UL248–14–2000 Low–Voltage Fuses–Part14: Supplemental Fuses
CSA C22.2 No.248.1–2000 Low–Voltage Fuses–Part1: General Requirements
CSA C22.2 No.248.14–2000 Low–Voltage Fuses–Part14: Supplemental Fuses
IEC60127–1 Miniature fuses–part 1: Definitions for miniature fuses and general requirements for miniature fuse–links
IEC60127–4 Miniature fuses–Part4: Universal modular fuse–links (UMF)

2. Classification

Type designation shall be the following form.

(Example) FCC 20 162 AD TP
1 2 3 4 5
Style

1 Chip fuses; rectangular type
2 Size
Style

3 Rated current Example: 162 → 1.6 (A)

4 Optional code

5 Packaging form

Symbol	Content
AB	Standard
AD	

3. Safety standard approval

- UL248–1 and UL248–14
- CSA C22.2, No. 248.1–00 and CSA C22.2, No. 248.14–00

The file number to be designated by UL and C–UL shall be as follows: E176847

4. Rating

The ratings shall be in accordance with Table–1.

4.1 Optional code: AB

Table–1(1)

Style	Rated current			Internal resistance value	Rated voltage (V)	Breaking capacity (A)	Time / current characteristic	
	Symbol	(A)	Marking symbol	(mΩ max.)			Current	Pre–arcing time
FCC10	201	0.2	Z	2400	DC30	35	200%	5 s max.
	251	0.25	C	1000				
	321	0.315	D	750				
	401	0.4	E	620				
	501	0.5	F	340				
	631	0.63	I	290				
	751	0.75	A	220				
	801	0.8	K	210				
	102	1.0	L	150				
	132	1.25	M	120				
	152	1.5	H	100				
	162	1.6	N	90				
FHC10	202	2.0	S	55	DC24			
	252	2.5	T	40				

Table–1(2)

Style	Rated current			Internal resistance value	Rated voltage (V)	Breaking capacity (A)	Time / current characteristic	
	Symbol	(A)	Marking symbol	(mΩ max.)			Current	Pre–arcing time
FCC16	201	0.2	ZB	3,200	DC36	35	200%	5 s max.
	251	0.25	CB	1,800				
	321	0.315	DB	1,000				
	401	0.4	EB	750				
	501	0.5	FB	330				
	631	0.63	IB	280				
	751	0.75	AB	210				
	801	0.8	KB	200				
	102	1.0	LB	130				
	132	1.25	MB	110				
	152	1.5	HB	95				
	162	1.6	NB	85				
	202	2.0	SB	70				
FHC16	252	2.5	TB	40	DC32			
FCC20	501	0.5	FB	330	DC50	50	200%	5 s max.
	631	0.63	IB	270				
	801	0.8	KB	190				
	102	1.0	LB	130				
	132	1.25	MB	100				
	162	1.6	NB	80				
	202	2.0	SB	65				
FHC20	252	2.5	TB	40	DC32			

4.2 Optional code: AD

Table–1(3)

Style	Rated current			Internal resistance value	Rated voltage (V)	Breaking capacity (A)	Time / current characteristic	
	Symbol	(A)	Marking symbol	(mΩ max.)			Current	Pre–arcing time
FCC10	151	0.15	O	2700	DC32	35	250%	5 s max.
	201	0.2	Z	1000	DC30			
	251	0.25	C	750				
	321	0.315	D	620				
	401	0.4	E	340				
	501	0.5	F	290				
	631	0.63	I	210				
	801	0.8	K	150				
	102	1.0	L	120				
	132	1.25	M	90				
FHC10	162	1.6	N	55	DC24			
	202	2.0	S	40				
	252	2.5	T	36				
	322	3.15	U	26				

Table–1(4)

Style	Rated current			Internal resistance value	Rated voltage (V)	Breaking capacity (A)	Time / current characteristic	
	Symbol	(A)	Marking symbol	(mΩ max.)			Current	Pre–arcing time
FCC16	151	0.15	OD	4000	DC50	35	250%	5 s max.
	201	0.2	ZD	1800	DC36			
	251	0.25	CD	1000				
	321	0.315	DD	750				
	401	0.4	ED	330				
	501	0.5	FD	280				
	631	0.63	ID	200				
	801	0.8	KD	130				
	102	1.0	LD	110				
	132	1.25	MD	85				
	162	1.6	ND	70				
	202	2.0	SD	55				
	252	2.5	TD	45	DC32			
FHC16	322	3.15	UD	26	DC24			
	402	4.0	XD	19				
FCC20	401	0.4	401	330	DC50	50	250%	5 s max.
	501	0.5	501	270				
	631	0.63	631	190				
	801	0.8	801	130				
	102	1.0	102	100				
	132	1.25	132	80				
	162	1.6	162	65				
	202	2.0	202	55				
	252	2.5	252	40				
FHC20	322	3.15	UD	26	DC32			
	402	4.0	XD	19				
	502	5.0	YD	14	DC24			
FCC32	201	0.2	201	1800	DC64	50	250%	5 s max.
	251	0.25	251	1000				
	321	0.315	321	750				
	401	0.4	401	350				
	501	0.5	501	295				
	631	0.63	631	200				
	801	0.8	801	140				
	102	1.0	102	110				
	132	1.25	132	85				
	152	1.5	152	78				
	162	1.6	162	75				
	202	2.0	202	65				
	252	2.5	252	45				
FHC32	322	3.15	UD	26	DC32			
	402	4.0	XD	19				
	502	5.0	YD	14				

4.3 Working temperature range: –55 to +125(°C)

5. Packaging form

The standard packaging form shall be in accordance with Table−2.

Table−2

Symbol	Packaging form		Standard packaging quantity / units	Application
B	Bulk (loose package)		1,000 pcs.	FCC10,16,20,32, FHC10,16,20,32
PA	Press pocket taping (paper taping)	8mm width, 2mm pitches	10,000 pcs.	FCC10, FHC10
TP	Paper taping	8mm width, 4mm pitches	5,000 pcs.	FCC16,20,32, FHC16,20,32

6. Dimensions

6.1 The resistor shall be of the design and physical dimensions in accordance with Figure−1 and Table−3.

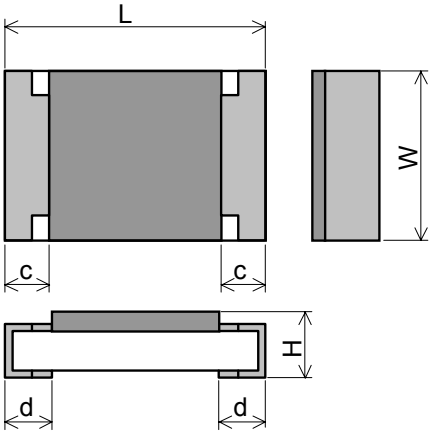

Figure−1

Table−3 Unit:mm

Style	L	W	H	c	d
FCC10, FHC10	1.0±0.05	0.5±0.05	0.4±0.05	0.2±0.1	0.25±0.10
FCC16, FHC16	1.6±0.1	$0.8^{+0.15}_{-0.05}$	0.45±0.10	0.3±0.15	0.3±0.1
FCC20, FHC20	2.0±0.1	1.25±0.10	0.6±0.1	0.4±0.2	0.4±0.2
FCC32	3.2±0.2	1.6±0.15	0.6±0.1	0.5±0.25	0.5±0.25
FHC32			0.65±0.10		

6.2 Net weight (Reference)

Style	Net weight(mg)
FCC10, FHC10	0.8
FCC16, FHC16	2
FCC20, FHC20	6
FCC32	10
FHC32	11

7. Marking

The Marking symbol of Sub– clause 4.1 shall be marked on over coat side.

(Example)

Style	Optional code	Marking symbol	Content
FCC10	AB	N	FCC10 162 AB
FHC10		T	FHC10 322 AD
FCC16		SB	FCC16 202 AB
FHC16		TB	FHC16 252 AB
FCC20		SB	FCC20 202 AB
FHC20		TB	FHC20 252 AB
FCC10	AD	N	FCC10 162 AD
FHC10		U	FHC10 322 AD
FCC16		ND	FCC16 162 AD
FHC16		UD	FHC16 322 AD
FCC20		162	FCC20 162 AD
FHC20		UD	FHC20 322 AD
FCC32		162	FCC32 162 AD
FHC32		UD	FHC32 322 AD

8. Performance

8.1 Unless otherwise specified, the standard range of atmospheric conditions for tests is as follows;

Ambient temperature: 5 °C to 35 °C, Relative humidity: 45 % to 85 %, Air presser: 86 kPa to 106 kPa

If there is any doubt the results, measurements shall be made within the following:

Ambient temperature: 20 °C ± 2 °C, Relative humidity: 60 % to 70 %, Air presser: 86 kPa to 106 kPa

8.2 The performance shall be satisfied in Table–4.

Table–4(1)

No.	Test items	Condition of test	Performance requirements
1	Temperature rise	The fuse shall be mounted on the test substrate as shown in Figure–2. Measurement temp.: 10 °C to 30 °C Test current: Rated current The temperature at the hottest point on the surface of the fuse shall be measured after temperature equilibrium has been attained.	75 °C max.
2	Current carrying capacity	The fuse shall be mounted on the test substrate as shown in Figure–2. Test current: 110 % of Rated current Test temp.: 70 °C ± 2 °C Test period: 1h	Without opening
3	Time / current characteristic	The fuse shall be mounted on the test substrate as shown in Figure–2. Test current shall be applied for continuously.	Optional code / Current / Pre–arcing time AB / 200% / 5 s max. AD / 250% / 5 s max.
4	Terminal bond strength of the face plating	JIS C 60068-2-21 Ue1 The fuse shall be mounted on the test substrate as shown in Figure–2. Bending value: 3 mm (Among the fulcrums: 90 mm) Duration: 10 s ± 1 s	Change of internal resistance: ±3% No evidence of mechanical damage.

Table–4(2)

No.	Test items	Condition of test	Performance requirements
5	Resistance to soldering heat	Test by a piece. Temp. of solder bath: 260 °C ± 5 °C Immersion time: 10 s ± 1 s After immersion into solder, leaving the room temp. for 1h or more, and then measure the internal resistance.	Change of internal resistance: ±10% No evidence of appearance damage
		• Reflow soldering Pre–heating: 150 °C ~ 180 °C, 120 s max. Peak: 260 °C ± 5 °C, 10 s max. Refrow cycle: 2 times After immersion into solder, leaving the room temp. for 1h or more, and then measure the internal resistance.	
6	Solderability	JIS C 60068-2-58 Test by a piece Flux: Rosin–Methanol Temp. of solder: bath: 235 °C ± 5 °C Immersion time: 2 s ± 0.5 s	The surface of terminal immersed shall be min. of 95 % covered with a new coating of solder.
7	Rapid change temperature	JIS C 60068-2-14 Na The fuse shall be mounted on the test substrate as shown in Figure–2. Upper temperature: +125 °C Lower temperature: –55 °C Duration of exposure at each temperature: 30 min. Number of cycles: 5 cycles	Change of internal resistance: ±10% No evidence of appearance damage
8	Endurance test	The fuse shall be mounted on the test substrate as shown in Figure–2. Test condition: Nominal ambient temp. and Relative humidity. Test potential: 1. Cycle of 1 h “ON” and 15 min. “OFF” at 1.05 times rated current for 100 cycles. 2. After above the test , 1.25 times rated current for 1h.	The voltage drop across the fuse after the test shall not have increased by more than 10 % of the value measured before test.

9. Test substrate

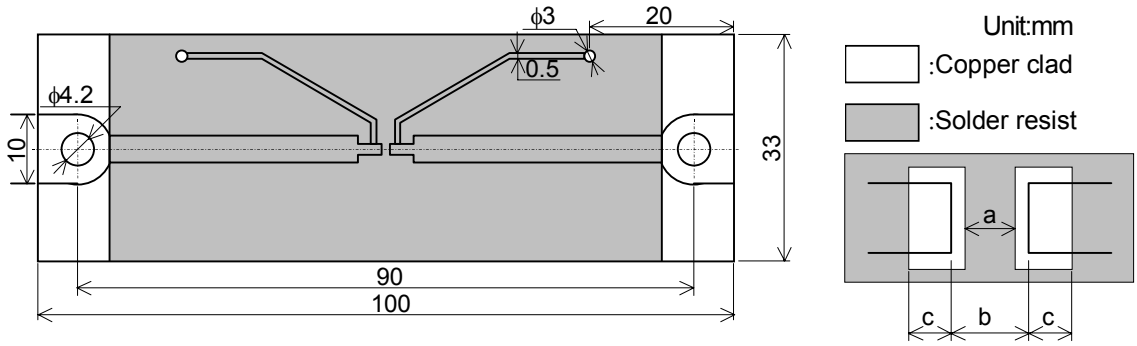

Style	A	b	c
FCC10, FHC10	0.3	0.6	0.65
FCC16, FHC16	0.6	1.0	0.5
FCC20, FHC20	0.9	1.3	0.7
FCC32, FHC32	1.8	2.2	0.85

Figure–2 FCC, FHC TEST SUBSTRATE

Remark 1). Material: Epoxide woven glass
Thickness: 1. 6mm Thickness of copper clad: 0. 035mm

10. Taping

10.1 Applicable documents JIS C 0806–3: 1999, EIAJ ET–7103: 2004, EIAJ ET–7200B: 2003

10.2 Taping dimensions

10.2.1 Press pocket taping(8mm width, 2mm pitches)

Taping dimensions shall be in accordance with Figure–3 and Table–5.

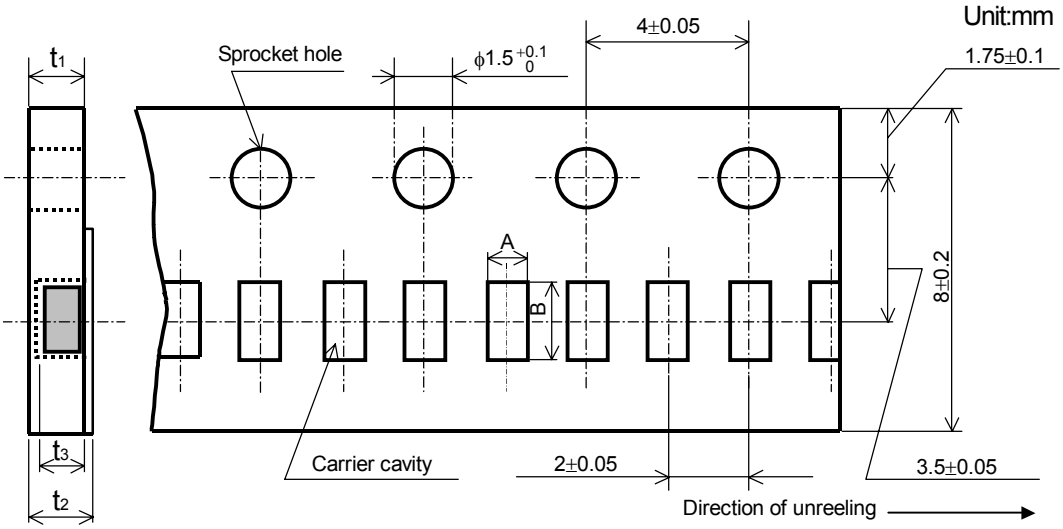

Figure–3

Table–5 Unit:mm

Style	A	B	t_1	t_2	t_3
FCC10, FHC10	0.65±0.1	1.15±0.1	0.6±0.05	0.7max.	0.5±0.05

10.2.2 Paper taping (8mm width, 4mm pitches)

Taping dimensions shall be in accordance with Figure–4 and Table–6.

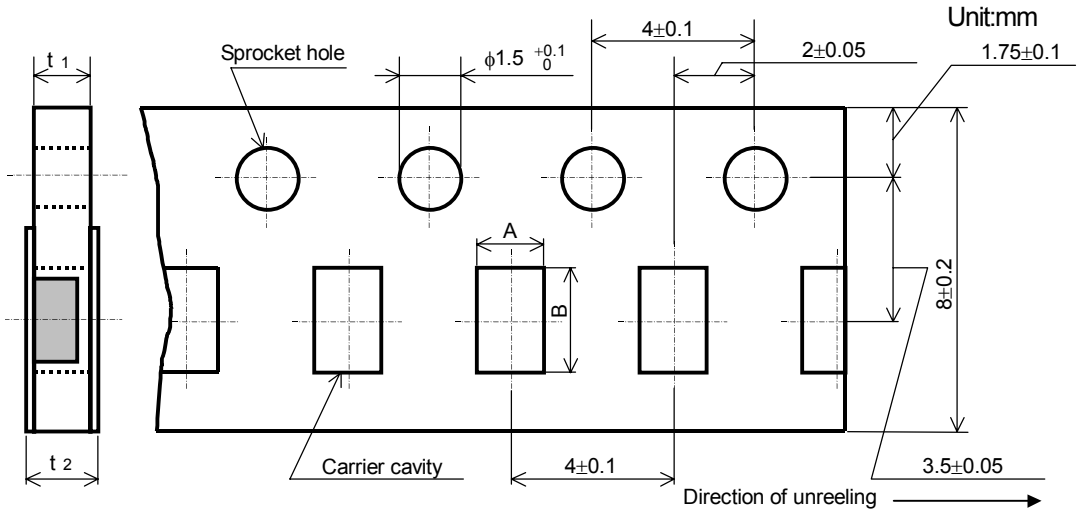

Figure–4

Table–6 Unit:mm

Style	A	B	t_1	t_2
FCC16, FHC16	1.15±0.15	1.9±0.2	0.6±0.1	0.8 max.
FCC20, FHC20	1.65±0.15	2.5±0.2	0.8±0.1	1.0 max.
FCC32, FHC32	2.0±0.15	3.6±0.2		

1). The cover tapes shall not cover the sprocket holes.
2). Tapes in adjacent layers shall not stick together in the packing.
3). Components shall not stick to the carrier tape or to the cover tape.
4). Pitch tolerance over any 10 pitches ±0.2mm.
5). The peel strength of the top cover tape shall be with in 0.1N to 0.5N on the test method as shown in the following FCC10:Figure–5,FCC16,20,32: Figure–6.
6). When the tape is bent with the minimum radius for 25 mm, the tape shall not be damaged and the components shall maintain their position and orientation in the tape.
7). In no case shall there be two or more consecutive components missing.
The maximum number of missing components shall be one or 0.1%, whichever is greater.
8). The fuses shall be faced to upward at the over coating side in the carrier cavity.

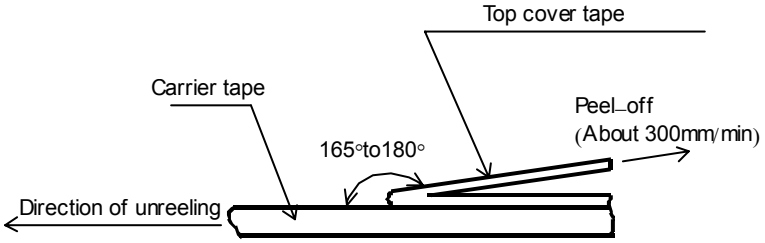

Figure–5

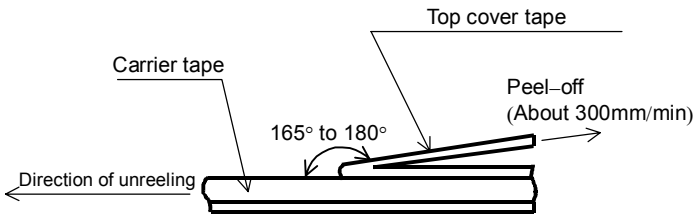

Figure–6

10.3 Reel dimension

Reel dimensions shall be in accordance with the following Figure–7 and Table–7.

Plastic reel (Based on EIAJ ET–7200B)

Unit:mm

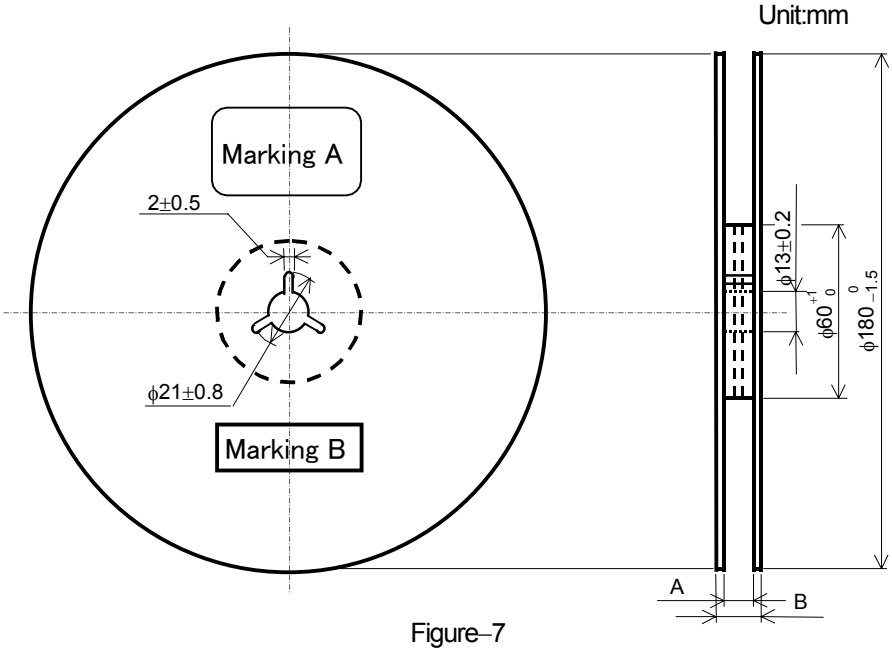

Figure–7

Table–7 Unit:mm

Style	A	B	Note
FCC10,16,20,32, FHC10,16,20,32	9 $^{+1.0}_{0}$	11.4±1.0	Injection molding
		13±1.0	Vacuum forming

Note: Marking label shall be marked on a place of Marking A or two place of marking A and B.

10.4 Leader and trailer tape.

(Example)

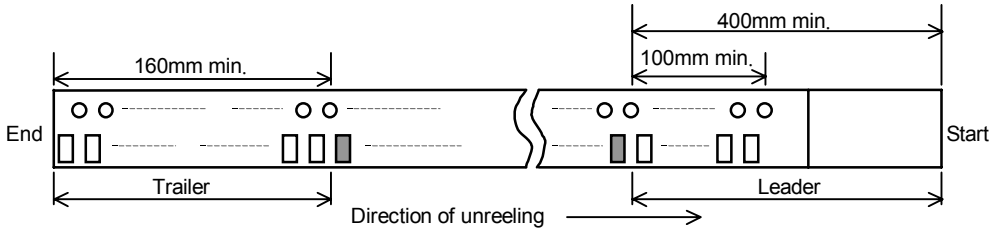

Figure–8

11. Marking on package

The label of a minimum package shall be legibly marked with follows.

11.1 Marking A

(1) Classification (Style, Rated current, Optional code, Packaging form) (2) Quantity (3) Lot number

(5) Manufacturer's name or trade mark (6) UL and /or C–UL recognized component mark (7) Others

11.2 Marking B (KAMAYA Control label)

12. Recommended Derating for Rated Current

- Nominal Derating
  Option Code AB: Nominal Derating ≤ 70% of Rated Current
  Option Code AD: Nominal Derating ≤ 80% of Rated Current
- Temperature Derating
  Please refer to the following graph regarding the current derating value for ambient temperature.

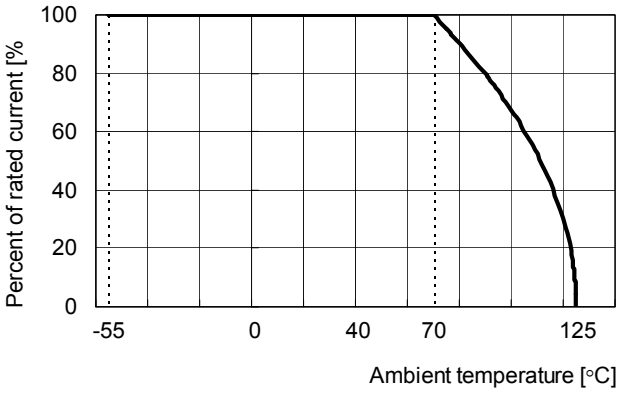

Ex.) • If Optional code: AB (Rated Current:1.0A) is used under ambient temperature 70°C
Kamaya recommends, less than the current value derated as below,
Rated Current: 1.0A × (Nominal Derating : 70% × Temperature Derating : 100%) =0.7A

• If Optional code: AD (Rated Current:1.0A) is used under ambient temperature 70°C
Kamaya recommends, less than the current value derated as below,
Rated Current: 1.0A × (Nominal Derating : 80% × Temperature Derating : 100%) =0.8A

Mouser Electronics

Authorized Distributor

Click to View Pricing, Inventory, Delivery & Lifecycle Information:

Kamaya:
FCC16151AD-TP

Компания «ЭлектроПласт» предлагает заключение долгосрочных отношений при поставках импортных электронных компонентов на взаимовыгодных условиях!

Наши преимущества:

- Оперативные поставки широкого спектра электронных компонентов отечественного и импортного производства напрямую от производителей и с крупнейших мировых складов;
- Поставка более 17-ти миллионов наименований электронных компонентов;
- Поставка сложных, дефицитных, либо снятых с производства позиций;
- Оперативные сроки поставки под заказ (от 5 рабочих дней);
- Экспресс доставка в любую точку России;
- Техническая поддержка проекта, помощь в подборе аналогов, поставка прототипов;
- Система менеджмента качества сертифицирована по Международному стандарту ISO 9001;
- Лицензия ФСБ на осуществление работ с использованием сведений, составляющих государственную тайну;
- Поставка специализированных компонентов (Xilinx, Altera, Analog Devices, Intersil, Interpoint, Microsemi, Aeroflex, Peregrine, Syfer, Eurofarad, Texas Instrument, Miteq, Cobham, E2V, MA-COM, Hittite, Mini-Circuits,General Dynamics и др.);

Помимо этого, одним из направлений компании «ЭлектроПласт» является направление «Источники питания». Мы предлагаем Вам помощь Конструкторского отдела:

- Подбор оптимального решения, техническое обоснование при выборе компонента;
- Подбор аналогов;
- Консультации по применению компонента;
- Поставка образцов и прототипов;
- Техническая поддержка проекта;
- Защита от снятия компонента с производства.

Как с нами связаться

Телефон: 8 (812) 309 58 32 (многоканальный)
Факс: 8 (812) 320-02-42
Электронная почта: org@eplast1.ru
Адрес: 198099, г. Санкт-Петербург, ул. Калинина, дом 2, корпус 4, литера А.