THIS DRAWING IS UNPUBLISHED. RELEASED FOR PUBLICATION 20
© COPYRIGHT 20 BY - ALL RIGHTS RESERVED.

REVISIONS

| P | LTR | DESCRIPTION | DATE | DWN | APVD |
|---|---|---|---|---|---|
| | G45 | REVISED PER ECO-13-011449 | 16JUL2013 | DLD | DCM |
| | G46 | REVISED PER ECO-14-007153 | 19MAY2014 | DLD | DCM |
| | G47 | REVISED PER ECO-14-014965 | 09OCT2013 | DLD | DCM |

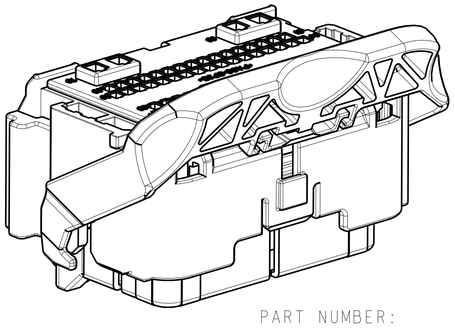

PART NUMBER:
1438136-1
SHOWN WITH SPACER
IN SEATED POSTION

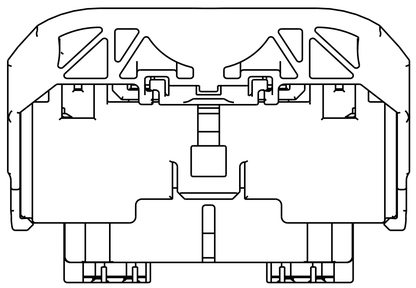

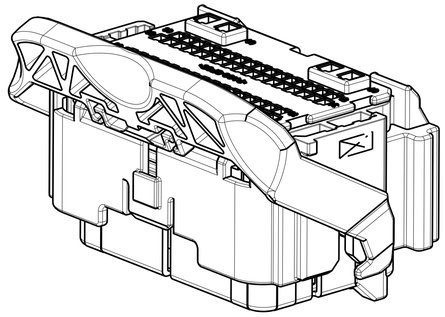

1. PRINT FORD PART NUMBER (SEE ATTACHED CHARTS) AND TRACEBILITY CODE (YY = 2 DIGIT YEAR, JJJ = JULIAN DATE, HH = 2 DIGIT MILITARY HOUR) IN THIS LOCATION AT ASSEMBLY. SEE SHEETS 3, 4 AND 5 (-*) PART NUMBERS.
2. APPLICABLE MOLEX (1.5) POWER TERMINAL PART NUMBERS:
   33012-0002 TIN 0.50-1.50mm$^2$
3. CAM LEVER AND SPACER ARE SHIPPED IN THEIR PRE-ASSEMBLED POSITIONS.
4. REFERENCE TE INSTRUCTION SHEET 408-8893.

5 COMPANY LOGO.

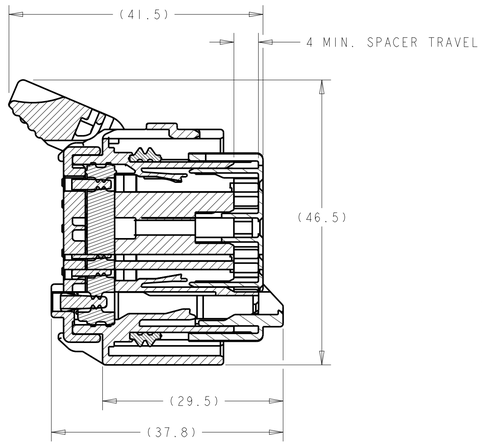


SECTION A-A
SPACER AND LEVER
IN PRE-SEATED POSITION
(DELIVERY POSITION)

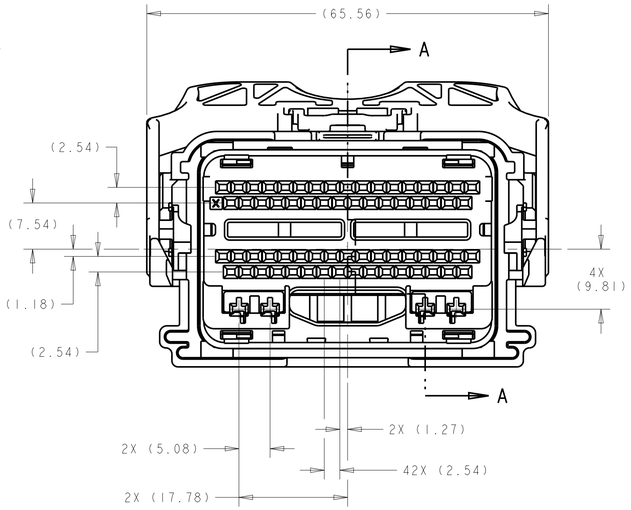


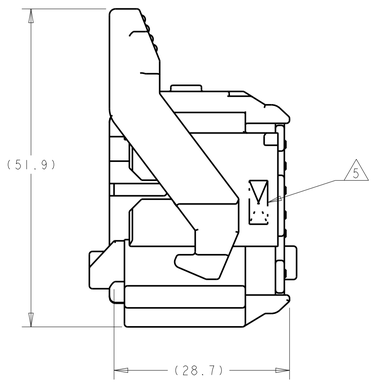


SHOWN WITH CAM
LEVER AND SPACER
IN LOADED POSTION

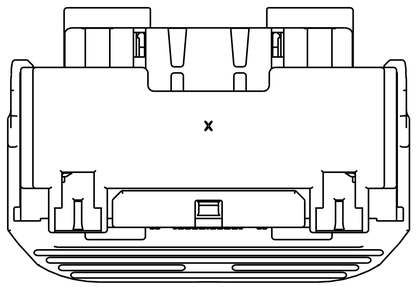

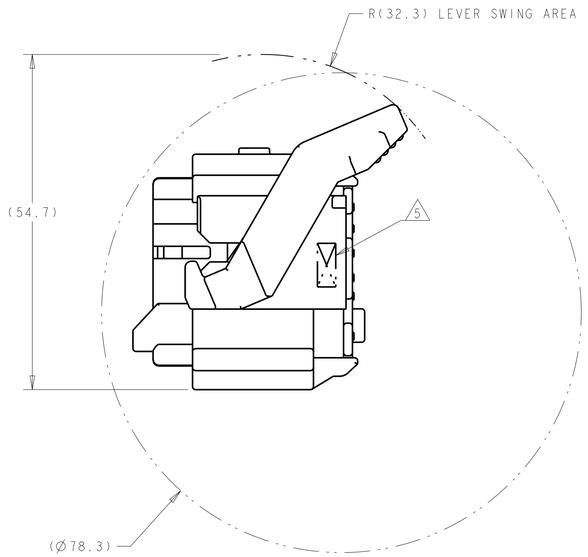


MIN. FEED THRU CONDITION
WITH 1mm CLEARANCE ALL AROUND
SHOWN WITH SPACER IN SEATED POSTION

APPLICABLE COMPONENTS (FOR REFERENCE ONLY)

| DESCRIPTION | NOMINAL TERMINAL SIZE | COLOR\ PLATING | FORD COMPONENT PART NUMBER | SUPPLIER PART NUMBER | MATERIAL/SPECIFICATION NUMBER | SAE WIRE SIZE |
|---|---|---|---|---|---|---|
| TERMINAL - FEMALE (Ag) | 0.64 (CAT. 0) | SILVER | 7S4T-14474-AA | 1393366-2 | COPPER ALLOY/SILVER PLATE | 20AWG |
| | | | | | | 18AWG |
| TERMINAL - FEMALE (Ag) | 0.64 (CAT. 0) | SILVER | 7S4T-14474-BA | 1393367-2 | COPPER ALLOY/SILVER PLATE | 22AWG |
| TERMINAL - FEMALE (Sn) | 0.64 (CAT. 0) | TIN | 1L2T-14474-AA | 1393366-1 | COPPER ALLOY/TIN PLATE | 20AWG |
| | | | | | | 18AWG |
| TERMINAL - FEMALE (Sn) | 0.64 (CAT. 0) | TIN | 1L2T-14474-BA | 1393367-1 | COPPER ALLOY/TIN PLATE | 22AWG |
| TERMINAL - FEMALE (Au) | 0.64 (CAT. 0) | GOLD | 1L2T-14474-CA | 1393365-1 | COPPER ALLOY/GOLD PLATE | 20AWG |
| | | | | | | 18AWG |
| TERMINAL - FEMALE (Au) | 0.64 (CAT. 0) | GOLD | 1L2T-14474-DA | 1393364-1 | COPPER ALLOY/GOLD PLATE | 22AWG |

SEE SHEETS 3 THRU 7
PART NUMBER

THIS DRAWING IS A CONTROLLED DOCUMENT.

DIMENSIONS: mm

TOLERANCES UNLESS OTHERWISE SPECIFIED:
0 PLC ±-
1 PLC ±0.3
2 PLC ±0.10
3 PLC ±-
4 PLC ±-
ANGLES ±1°

MATERIAL - -
FINISH - -

DWN R. VESTAL 15APR2005
CHK T. VALASEK 15APR2005
APVD T. VALASEK 15APR2005
PRODUCT SPEC -
APPLICATION SPEC -
WEIGHT -

TE Connectivity

NAME 70-WAY HARNESS ASSEMBLY

| SIZE | CAGE CODE | DRAWING NO | RESTRICTED TO |
|---|---|---|---|
| A1 | 00779 | C-1438136 | - |

CUSTOMER DRAWING SCALE 2:1 SHEET 1 OF 11 REV G47

4805 (3/13)

THIS DRAWING IS UNPUBLISHED. RELEASED FOR PUBLICATION 20
© COPYRIGHT 20 BY - ALL RIGHTS RESERVED.

REVISIONS

| P | LTR | DESCRIPTION | DATE | DWN | APVD |
|---|---|---|---|---|---|
| | - | SEE SHEET 1 | - | - | - |

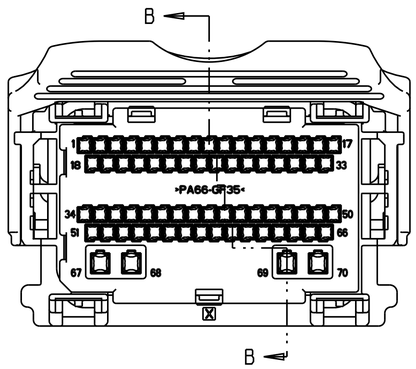


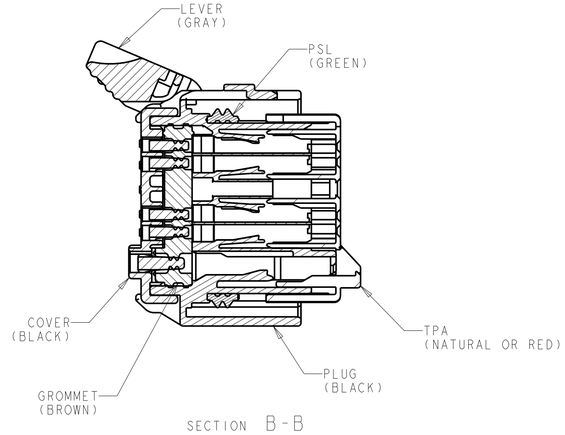


SECTION B-B

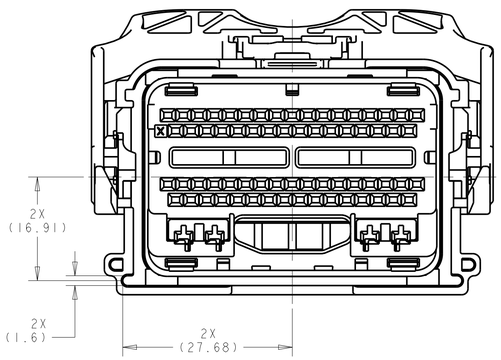


KEYING OPTION "A"

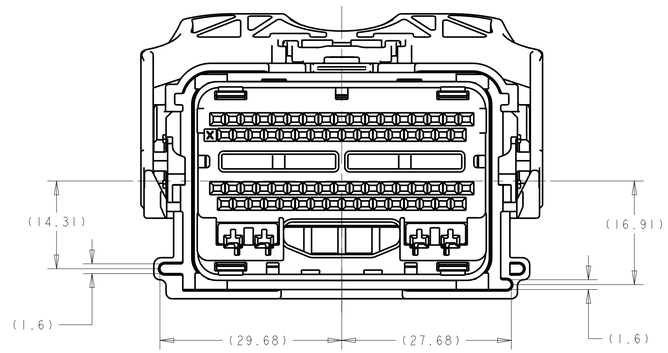


KEYING OPTION "B"

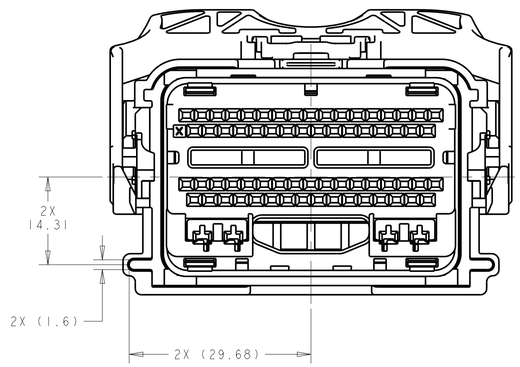


KEYING OPTION "C"

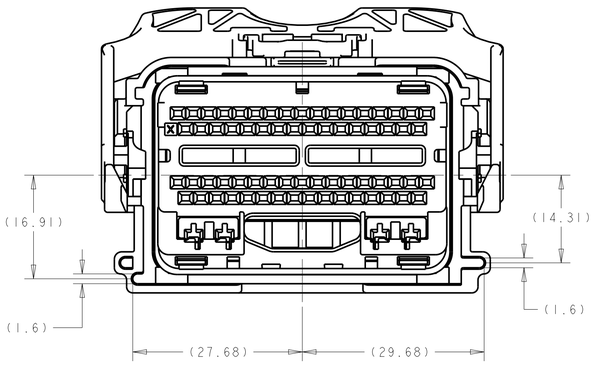


KEYING OPTION "D"

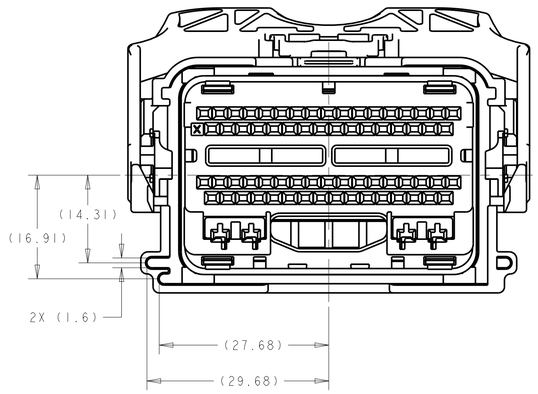


KEYING OPTION "E"

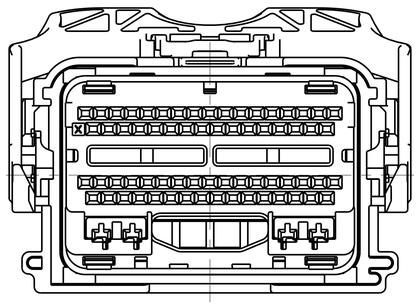

KEYING OPTION "F"

THIS DRAWING IS A CONTROLLED DOCUMENT.

DIMENSIONS: mm

TOLERANCES UNLESS OTHERWISE SPECIFIED:
0 PLC ±-
1 PLC ±0.3
2 PLC ±0.10
3 PLC ±-
4 PLC ±-
ANGLES ±1°

MATERIAL - -

FINISH - -

| | | |
|---|---|---|
| DWN | R. VESTAL | 15APR2005 |
| CHK | T. VALASEK | 15APR2005 |
| APVD | T. VALASEK | 15APR2005 |

PRODUCT SPEC -

APPLICATION SPEC -

WEIGHT -

TE Connectivity

NAME 70-WAY HARNESS ASSEMBLY

| SIZE | CAGE CODE | DRAWING NO | RESTRICTED TO |
|---|---|---|---|
| A1 | 00779 | C-1438136 | - |

CUSTOMER DRAWING

| SCALE | SHEET | OF | REV |
|---|---|---|---|
| 2:1 | 2 | 11 | G47 |

4805 (3/13)

THIS DRAWING IS UNPUBLISHED. RELEASED FOR PUBLICATION 20
© COPYRIGHT 20 BY - ALL RIGHTS RESERVED.

| P | LTR | DESCRIPTION | DATE | DWN | APVD |
|---|---|---|---|---|---|
| | - | SEE SHEET 1 | - | - | - |

REVISIONS

# KEYING OPTION A

| | | | | | | | | | | | | | | | | | | | | | | | | | | | | | | | | | | | | | | | | | | | | | | | | | | | | | | | | | | | | | | | | | | | | | | | | | |
|---|---|---|---|---|---|---|---|---|---|---|---|---|---|---|---|---|---|---|---|---|---|---|---|---|---|---|---|---|---|---|---|---|---|---|---|---|---|---|---|---|---|---|---|---|---|---|---|---|---|---|---|---|---|---|---|---|---|---|---|---|---|---|---|---|---|---|---|---|---|---|---|---|
| | | | | | |65|64|63|62| | | | | |56| | | | | | | | | | | | | |42| |40|39| | | | | |33|32| | | | |27|26|25|24|23|22|21|20|19|18| | | | |13| | | | |8|7|6| | | |2|1|9-1438136-6|5L3T-14A464-DA-054|
| | | | | | |65|64|63|62| | | | | |56| | | | | | | | | | | | |43|42| |40|39| | | | | |33| | | | | | | | |24| | |21|20| |18| | | | |13| | | | |8| | | | |3|2|1|8-1438136-8|5L3T-14A464-DA-053|
| | | | | | |65|64|63|62| | | | | |56| | | | | |49|48| | | | | |43|42| |40|39| | | | | |33| |31|30| | |27| | | |23| |21| | |18| | | | |13| | | | |8| | |5|4|3|2|1|8-1438136-3|5L3T-14A464-DA-052|
| | | | | | |65| | | | | | | | |56| | | | |50|49|48| | | |44|43|42| |40|39| | | | | |33| |31|30| | | | | |24| | | |20| | | | | | | |13| | | | |8| | | | |3|2|1|8-1438136-2|5L3T-14A464-DA-051|
| | | | | | | |64|63|62| | | | |57|56|55| | | |50| | | | | | |43| | | |39|38| | | | | |32| | | | |27|26|25| | |22| | | | | | | | |14|13| | | |9|8| | | | |3| | |8-1438136-1|5L3T-14A464-DA-050|
| | | | | | | |64|63|62| | | | |57|56|55| | | |50| | | | | | |43| | | |39|38| | | | | |32| | |29|28|27|26|25| | |22| | | | | | | | |14|13| | | |9|8| | | | |3| | |7-1438136-8|5L3T-14A464-DA-049|
| | | | | | |65|64|63|62| | | | |57|56| | | | | | | | | | | | |42| |40|39| | | | | |33|32| | | | | |26|25|24|23|22|21|20|19|18| | | | |13| | | | |8|7|6| | | |2|1|7-1438136-7|5L3T-14A464-DA-048|
| | | | | | |65|64|63|62| | | | | |56| | | | | |49|48| | | | | |43|42| |40|39| | | | | |33| |31|30| | | | | | |23| |21| | |18| | | | |13| | | | |8| | |5|4|3|2|1|7-1438136-5|5L3T-14A464-DA-047|
| | | | | | |65| | | | | | | | |56| | | | |50| | | | | |44|43|42| |40|39| | | | | |33| | | | | | | | |24| | | |20| | | | | | | |13| | | | |8| | | | |3|2|1|7-1438136-4|5L3T-14A464-DA-046|
| | | | | | |65|64|63|62| | | | | |56| | | | | | | | | | | | |43|42| |40|39| | | | | |33| | | | | |27| | |24| | |21|20| |18| | | | |13| | | | |8| | | | |3|2|1|7-1438136-3|5L3T-14A464-DA-045|
| | | |68|67| |65|64| | | | | | | |56|55| | | | |50| | | | | |44|43|42|41|40|39|38| | | | |33| |31|30| | |27| | |24| | | |20| | | | | |15|14|13| |11|10|9|8| | | | | |2|1|7-1438136-2|5L3T-14A464-DA-044|
| |70| |68|67|66|65|64|63| | |60|59| | | |55|54| | |51|50| | | | | |44|43|42| |40| |38|37| | |34| |32|31|30|29| |27| | |24|23| |21|20|19|18| |16|15|14| | |11|10|9| | | |5|4|3|2|1|7-1438136-1|5L3T-14A464-DA-043|
| | | | | | | |64|63|62| | | | |57|56|55| | | |50| | | | | | |43|42| | |39|38| | | | | |32| | | | |27| |25| | |22|21|20|19|18| | | |14| | | | |9|8|7| |5| | | |1|6-1438136-9|5L3T-14A464-DA-042|
| | | |68|67| |65|64| | | | | | | |56| | | | | |50| | | | | |44|43|42| |40|39| | | | | |33| |31|30| | |27| | |24|23| | |20| |18| | | | |13| | | | |8| | | |4| |2|1|6-1438136-8|5L3T-14A464-DA-041|
| | | |68|67| | |64|63|62| | | | | |56| | | | | |50| | | | | |44|43|42| |40|39| | | | | |33| |31|30| | |27| | |24|23| |21|20| |18| | | | |13| | | | |8|7|6| | | | | |6-1438136-7|5L3T-14A464-DA-040|
| | | |68|67| | |64|63|62| | | | | | | | | | | |50|49|48| | | |44|43|42| |40| | | | | | |33| |31|30| | |27| | |24|23| |21|20| |18| | | | | | | | | | |7|6| |4|3| | |6-1438136-6|5L3T-14A464-DA-039|
| | | |68|67|66|65|64| |62| |60|59| | |56|55| | | |51|50| | | | | |44|43|42|41|40|39|38| | | |34| |32|31|30| | |27| | |24|23| | |20|19| | | |15|14|13| |11|10|9|8|7| |5|4|3|2|1|6-1438136-5|5L3T-14A464-DA-038|
| | | |68|67|66|65|64| |62| |60|59| | |56|55| | | |51|50| | | | | |44|43|42|41|40|39|38| | | |34| |32|31|30| | |27| | |24|23| | |20|19| | | |15|14|13| |11|10|9|8|7| |5|4| |2|1|6-1438136-4|5L3T-14A464-DA-037|
| |70| |68|67|66|65|64|63| | |60|59| | | |55|54| | |51|50| | | | | |44|43|42| |40| |38|37| | |34| |32|31|30|29| |27| | |24|23| |21|20|19| | |16|15|14| | |11|10|9| | | |5|4|3|2|1|6-1438136-3|5L3T-14A464-DA-036|
| | | | | | | |64|63|62| | | | |57|56|55| | | |50| | | | | | |43| | | |39|38| | | | | |32| | | | |27|26|25| | |22|21|20|19|18| | | |14|13| | | |9|8|7|6|5|4|3| | |6-1438136-2|5L3T-14A464-DA-035|
| | | | | | | |64|63|62| | | | |57|56|55| | | |50| | | | | | |43| | | |39|38| | | | | |32| | | | |27|26|25| |23|22|21|20|19|18| | | |14|13| | | |9|8|7|6|5|4| | | |6-1438136-0|5L3T-14A464-DA-034|
| | | |68|67| |65|64| | | | | | | |56|55| | | | | | | | | | |44| |42| |40|39|38| | | | |33| |31|30| | |27| | |24|23| | |20| |18| | |15|14|13| |11|10|9|8|7| |5|4| |2|1|5-1438136-9|5L3T-14A464-DA-033|
| | | |68|67| | | | | | | | | | | | | | | | |50| | | | | |44|43|42| |40| | | | | | |33| | | | | |27| | |24| | | |20| |18| | | | | | | | | | | |7| | | | |2| |5-1438136-8|5L3T-14A464-DA-032|
| | | |68|67| | | |63|62| | | | | | | | | | | |50| | | | | |44|43|42| |40| | | | | | |33| | | | | |27| | |24| | |21|20| |18| | | | | | | | | | | |7| | | | |2| |5-1438136-7|5L3T-14A464-DA-031|
| | | | | | | |64|63|62| | | | | |56| | | | | | | | | | | | | |42| |40|39| | | | | |33| | | | | | | | |24|23| |21|20| |18| | | | |13| | | | |8|7| | | | | | |5-1438136-6|5L3T-14A464-DA-030|
| | | |68|67|66|65|64| | | |60|59| | | |55| | | |51|50| | | | | |44|43|42| |40| |38| | | |34| |32|31|30| | |27| | |24|23| | |20|19| | | |15|14| | |11|10|9| | | |5|4| |2|1|5-1438136-5|5L3T-14A464-DA-029|
| | | |68|67| | |64| | | | | | | |56| | | | | |50| | | | | |44|43|42| |40|39| | | | | |33| |31|30| | |27| | |24|23| | |20| |18| | | | |13| | | | |8|7|6| | | | | |4-1438136-9|5L3T-14A464-DA-028|
| |70| |68| | | | |63| | | | | | |56|55|54| | | | | | | | | |44| |42| |40|39|38|37| | | |33|32|31|30|29| |27| |25|24| |22|21| |19| | | |15|14| | | |10| | | | |5|4| |2|1|4-1438136-3|5L3T-14A464-DA-027|
| |70| |68| | | | |63| | | | | | |56|55|54| | | | | | | | | |44| |42| |40|39|38|37| | | |33|32|31|30|29| |27| | |24| |22|21| |19| | | |15|14| | | |10| | | | | |4| |2|1|4-1438136-2|5L3T-14A464-DA-026|
| | | | | | | |64|63| | | | | | |56|55| | | |50| | | | | | |43|42|41|40|39|38| | | | | |32|31|30| | |27| |25| | |22|21|20|19| | | | |14| | | | | | | | |5| | | |1|4-1438136-1|5L3T-14A464-DA-025|
| | | |68|67| | |64| | | | | | | |56| | | | | |50| | | | | |44|43|42| |40|39| | | | | |33| |31|30| | |27|26|25| |23|22| |20|19|18| | | | |13| | | | |8|7|6|5|4|3|2|1|4-1438136-0|5L3T-14A464-DA-024|
| | | |68|67| | |64|63|62| | | | | |56| | | | | |50| | | | | |44|43|42| |40|39| | | | | |33| |31|30| | |27| | |24|23| |21|20| |18| | | | |13| | | | |8|7|6| | | |2| |3-1438136-9|5L3T-14A464-DA-023|
| | | |68|67| | |64|63|62| | | | | | | | | | | |50|49|48| | | |44|43|42| |40| | | | | | |33| |31|30| | |27| | |24|23| |21|20| |18| | | | | | | | | | |7|6| | | | | |3-1438136-8|5L3T-14A464-DA-022|
| | | |68|67| | |64| |62| | | | | |56| | | | | |50| | | | | |44|43|42| |40|39| | | | | |33| |31|30| | |27| | |24|23| | |20| |18| | | | |13| | | | |8|7|6| | | |2| |3-1438136-7|5L3T-14A464-DA-021|
| | | |68|67| | |64| | | | | | | |56| | | | | |50| | | | | |44|43|42| |40|39| | | | | |33| |31|30| | |27| | |24|23| | |20|19|18| | | | |13| | | | |8|7|6| | | | | |3-1438136-6|5L3T-14A464-DA-020|
| | | | | | |65|64|63|62| | | | | |56| | | | | | | | | | | | |43|42| |40|39| | | | | |33| | | | | | | | | |23| |21| | |18| | | | |13| | | | |8| | |5|4|3|2|1|3-1438136-5|5L3T-14A464-DA-019|
| | | |68|67| |65|64| | | | | | | |56|55| | | | |50| | | | | |44|43|42|41|40|39|38| | | | |33| |31|30| | |27| | | |23| | | | | | | | |15|14|13| |11|10|9|8| | |5|4| |2|1|3-1438136-4|5L3T-14A464-DA-018|
| | | |68|67| | |64|63|62| | | | | | | | | | | |50|49|48| | | |44|43|42| |40| | | | | | |33| |31|30| | |27| | |24|23| |21|20| |18| | | | | | | | | | |7|6| |4|3|2| |3-1438136-3|5L3T-14A464-DA-017|
| | | |68|67| | |64|63|62| | | | | |56| | | | | |50| | | | | |44|43|42| |40|39| | | | | |33| |31|30| | |27| | |24|23| |21|20| |18| | | | |13| | | | |8|7|6| |4|3|2| |3-1438136-2|5L3T-14A464-DA-016|
| | | |68|67| | | |63|62| | | | | | | | | | | |50| | | | | |44|43|42| |40| | | | | | |33| | | | | |27| | |24|23| |21|20| |18| | | | | | | | | | |7|6| | | |2| |3-1438136-1|5L3T-14A464-DA-015|
| | | | | | | |64|63|62| | | | | |56| | | | | | | | | | | | | |42| |40|39| | | | | |33| | | | | | | | |24|23| |21|20| |18| | | | |13| | | | |8|7|6| | | | | |3-1438136-0|5L3T-14A464-DA-014|
| | | | | | | |64|63|62| | | | | |56| | | | | | | | | | | | | |42| |40|39| | | | | |33| | | | | | |26|25| |23|22|21|20| |18| | | | |13| | | | |8|7|6|5|4|3|2|1|2-1438136-7|5L3T-14A464-DA-013|
| | | |68|67| | |64| | | | | | | |56|55| | | | | | | | | | |44| |42| |40|39|38| | | | |33| |31|30| | |27|26|25|24|23|22| |20| |18| | |15|14|13| |11|10|9|8|7|6|5|4| |2|1|2-1438136-6|5L3T-14A464-DA-012|
| | | | | | | |64|63|62| | | | | |56| | | | | | | | | | | | | |42| |40|39| | | | | |33| | | | | | | | |24|23| |21|20| |18| | | | | | | | | | | | | | | |2|1|2-1438136-4|5L3T-14A464-DA-011|
| | | |68|67| | |64| | | | | | | |56|55| | | | |50| | | | | |44|43|42|41|40|39|38| | | | |33| |31|30| | |27| | |24|23| | |20| | | | | |15|14| | |11|10|9| | | | | | |2|1|2-1438136-3|5L3T-14A464-DA-010|
| | | | | | | |64|63|62| | | | | |56| | | | | | | | | | | | | |42| |40|39| | | | | |33| | | | | | |26|25|24|23|22|21|20| |18| | | | |13| | | | |8|7|6|5|4|3|2|1|2-1438136-2|5L3T-14A464-DA-009|
| | | |68|67| | | | | | | | | | |56| | | | | |50| | | | | |44|43|42| |40|39| | | | | |33| |31|30| | |27|26|25| |23|22| |20|19|18| | | | |13| | | | |8|7|6|5|4|3|2|1|1-1438136-6|5L3T-14A464-DA-008|
| | | |68|67| | |64| | | | | |58| |56|55| | | | |50| | | | | |44|43|42|41|40|39|38| | | | | | |31|30| | |27| | | | | | | |20| | | | | |15|14| | |11|10|9| | | | | | |2|1|1-1438136-5|5L3T-14A464-DA-007|
| | | | | | | |64|63|62| | | |58|57|56| | | | | | | | | | | | | |42| |40|39| | | | | | | | | | | | | | | |24| | |21|20| |18| | | | | | | | | | | | | | | |2|1|1-1438136-4|5L3T-14A464-DA-006|
| | | |68|67| | |64| | | | | |58|57|56|55| | | | |50| | | | | |44|43|42|41|40|39|38| | | | | | |31|30| | |27| | | | | | | |20| | | | | |15|14| | |11|10|9| | | | | | |2|1|1-1438136-3|5L3T-14A464-DA-005|
| | | |68|67| | | | | | | | | | |56| | | | | |50| | | | | |44|43|42| |40|39| | | | | |33| |31|30| | |27|26|25| |23|22| | |19|18| | | | |13| | | | |8|7|6|5|4|3|2|1|1-1438136-0|5L3T-14A464-DA-004|
|CAVITIES WITH A NUMERIC SYMBOL INDICATES CLOSED TERMINAL LOCATIONS| | | | | | |64|63|62| | | | | |56| | | | | | | | | | | | | |42| |40|39| | | | | |33| | | | | | |26|25| |23|22|21|20|19|18| | | | |13| | | | |8|7|6|5|4|3|2|1|1438136-9|5L3T-14A464-DA-003|
| | | | | | | |64|63|62| | | | | |56| | | | | | | | | | | | | |42| |40|39| | | | | | | |31|30| | | |26|25| | |22|21| |19|18| | | | |13| | | | |8|7|6|5|4|3|2|1|1438136-8|5L3T-14A464-DA-002|
|BLANK CAVITIES INDICATES OPEN TERMINAL HOLE LOCATIONS| | |68|67| | | | | | | | | | |56| | | | | |50| | | | | |44|43|42| |40|39| | | | | | | |31|30| | |27|26|25| | |22| | |19|18| | | | |13| | | | |8|7|6|5|4|3|2|1|1438136-7|5L3T-14A464-DA-001|
| | | | | | | | | | | | | | | | | | | | | | | | | | | | | | | | | | | | | | | | | | | | | | | | | | | | | | | | | | | | | | | | | | | | | | | |1438136-1|5L3T-14A464-DA-000|
|TERMINAL HOLE POSITION|70|69|68|67|66|65|64|63|62|61|60|59|58|57|56|55|54|53|52|51|50|49|48|47|46|45|44|43|42|41|40|39|38|37|36|35|34|33|32|31|30|29|28|27|26|25|24|23|22|21|20|19|18|17|16|15|14|13|12|11|10|9|8|7|6|5|4|3|2|1|ASSEMBLY PART NUMBER|FORD PART NUMBER|

5L3T-14A464-D* PIN-OUT CHART

THIS DRAWING IS A CONTROLLED DOCUMENT.

DWN R. VESTAL 15APR2005
CHK T. VALASEK 15APR2005
APVD T. VALASEK 15APR2005

DIMENSIONS: mm

TOLERANCES UNLESS OTHERWISE SPECIFIED:
0 PLC ±-
1 PLC ±0.3
2 PLC ±0.10
3 PLC ±-
4 PLC ±-
ANGLES ±1°

PRODUCT SPEC -
APPLICATION SPEC -
WEIGHT -
MATERIAL - -
FINISH - -

TE Connectivity

NAME 70-WAY HARNESS ASSEMBLY

SIZE A1 CAGE CODE 00779 DRAWING NO C-1438136 RESTRICTED TO -

CUSTOMER DRAWING

SCALE 2:1 SHEET 3 OF 11 REV G47

THIS DRAWING IS UNPUBLISHED. | RELEASED FOR PUBLICATION 20
© COPYRIGHT 20 BY - | ALL RIGHTS RESERVED.

| REVISIONS | | | | | |
|---|---|---|---|---|---|
| P | LTR | DESCRIPTION | DATE | DWN | APVD |
| | - | SEE SHEET 1 | - | - | - |

| | | | | | | | | | | | | | | | | | | | | | | | | | | | | | | | | | | | | | | | | | | | | | | | | | | | | | | | | | | | | | | | | | | | | | | | | |
|---|---|---|---|---|---|---|---|---|---|---|---|---|---|---|---|---|---|---|---|---|---|---|---|---|---|---|---|---|---|---|---|---|---|---|---|---|---|---|---|---|---|---|---|---|---|---|---|---|---|---|---|---|---|---|---|---|---|---|---|---|---|---|---|---|---|---|---|---|---|---|---|---|
| KEYING OPTION A | 70 | 69 | 68 | 67 | | 65 | | 63 | 62 | 61 | 60 | 59 | | | 56 | | | | | 51 | 50 | 49 | 48 | 47 | 46 | 45 | 44 | 43 | 42 | | 40 | | | | 36 | | 34 | 33 | | 31 | 30 | 29 | 28 | 27 | 26 | 25 | 24 | 23 | 22 | 21 | 20 | | 18 | 17 | 16 | 15 | 14 | 13 | 12 | 11 | 10 | 9 | 8 | 7 | 6 | 5 | | | | | 9-2035383-9 | 5L3T-14A464-DA-080 |
| | | 69 | | | 66 | 65 | 64 | 63 | 62 | 61 | 60 | 59 | 58 | 57 | 56 | 55 | 54 | 53 | 52 | | | | | | | | | | | | | | | | | | 34 | 33 | 32 | 31 | 30 | | | 27 | 26 | 25 | 24 | | | | 20 | | | 17 | 16 | | | | 12 | | | | 8 | | | | 4 | 3 | | | 9-2035383-5 | 5L3T-14A464-DA-079 |
| | 70 | 69 | | | 66 | 65 | 64 | 63 | 62 | 61 | 60 | 59 | 58 | | 56 | 55 | 54 | 53 | | 51 | 50 | 49 | 48 | | 46 | 45 | 44 | 43 | 42 | 41 | 40 | 39 | 38 | 37 | 36 | 35 | 34 | 33 | 32 | 31 | 30 | 29 | 28 | 27 | 26 | 25 | 24 | 23 | 22 | | 20 | 19 | 18 | 17 | 16 | 15 | | | 12 | 11 | 10 | 9 | | 7 | 6 | 5 | 4 | 3 | 2 | 1 | 9-2035383-3 | 5L3T-14A464-DA-078 |
| | | | | | | 65 | | | | | | | | | | | | | | | | | | | | | | | | | 40 | | 38 | | 36 | 35 | | | | 31 | 30 | | | | | | | | 22 | 21 | 20 | | | 17 | 16 | 15 | 14 | | 12 | 11 | | 9 | 8 | 7 | 6 | | | | | | 1-2035383-4 | 5L3T-14A464-DA-077 |
| | | | | | | | 64 | 63 | 62 | | | | | | 56 | | | | | | 50 | | | | | | | 43 | 42 | | 40 | 39 | | | | | | 33 | | | | | | 27 | | | | | | 21 | 20 | | 18 | | | | | 13 | | | | | 8 | | 6 | | | | 2 | | 1-2035383-0 | 5L3T-14A464-DA-076 |
| | | | 68 | 67 | | 65 | 64 | | | | | | | | 56 | | | | | | 50 | | | | | | 44 | 43 | 42 | | 40 | 39 | | | | | | 33 | | 31 | 30 | | | 27 | | | 24 | 23 | | | 20 | | 18 | | | | | 13 | | | | | 8 | | | | 4 | 3 | 2 | 1 | 2035383-8 | 5L3T-14A464-DA-075 |
| | | | 68 | 67 | | | 64 | 63 | 62 | | | | | 57 | | | | | | | 50 | 49 | 48 | | | | 44 | 43 | 42 | | 40 | | | | | | | 33 | 32 | 31 | 30 | | | 27 | | | 24 | | | 21 | 20 | 19 | 18 | | | | | | | | | | | | | | | | 2 | | 2035383-2 | 5L3T-14A464-DA-074 |
| | | | 68 | 67 | | | 64 | 63 | | | 60 | | | 57 | | | 54 | 53 | 52 | | 50 | 49 | 48 | | 46 | 45 | | 43 | 42 | | 40 | | 38 | 37 | 36 | 35 | 34 | 33 | 32 | 31 | 30 | 29 | 28 | 27 | 26 | 25 | 24 | 23 | 22 | 21 | 20 | 19 | | | | 15 | 14 | 13 | 12 | | 10 | 9 | 8 | | 6 | 5 | 4 | 3 | | 1 | 7-1456659-1 | 5L3T-14A464-DA-073 |
| | | | | | | 65 | 64 | 63 | 62 | | | | | | 56 | | | | | | | | | | | | | 43 | 42 | | 40 | 39 | | | | | | 33 | | | | | | 27 | | | | 23 | | 21 | | | 18 | | | | | 13 | | | | | 8 | | | 5 | 4 | | 2 | 1 | 5-1456659-9 | 5L3T-14A464-DA-072 |
| | | | | | | | 64 | 63 | 62 | | | | | 57 | 56 | 55 | | | | | 50 | | | | | | | 43 | 42 | | | 39 | 38 | | | | | | 32 | | | | | 27 | | 25 | | | 22 | 21 | 20 | 19 | 18 | | | | 14 | | | | | 9 | 8 | 7 | 6 | 5 | | | 2 | 1 | 5-1456659-8 | 5L3T-14A464-DA-071 |
| | | | 68 | 67 | | | | 63 | 62 | | | | | | | | | | | | 50 | | | | | | 44 | 43 | 42 | | 40 | | | | | | | 33 | | | | | | 27 | | | | | | 21 | 20 | | 18 | | | | | | | | | | | | 6 | | | | 2 | | 5-1456659-7 | 5L3T-14A464-DA-070 |
| | | | | | | | 64 | 63 | 62 | | | | | | 56 | | | | | | 50 | | | | | | | 43 | 42 | | 40 | 39 | | | | | | 33 | | | | | | 27 | | | | | | 21 | 20 | | 18 | | | | | 13 | | | | | 8 | | 6 | | | | | | 5-1456659-6 | 5L3T-14A464-DA-069 |
| | | | | | | 65 | 64 | 63 | 62 | | | | | 57 | 56 | 55 | | | | | 50 | | | | | | | 43 | | | | 39 | 38 | | | | | 33 | 32 | | | | | 27 | 26 | 25 | | | 22 | | | | | | | | 14 | 13 | | | | 9 | 8 | | | | | 3 | | | 5-1456659-4 | 5L3T-14A464-DA-068 |
| | | | | | | 65 | 64 | 63 | 62 | | | | | 57 | 56 | 55 | | | | | 50 | | | | | | | 43 | | | | 39 | 38 | | | | | 33 | 32 | | | | | 27 | 26 | 25 | | | 22 | 21 | 20 | 19 | 18 | | | | 14 | 13 | | | | 9 | 8 | 7 | 6 | 5 | 4 | 3 | | | 4-1456659-9 | 5L3T-14A464-DA-067 |
| | | | | | | 65 | 64 | 63 | 62 | | | | | 57 | 56 | 55 | | | | | 50 | | | | | | | 43 | | | | 39 | 38 | | | | | 33 | 32 | | | 29 | 28 | 27 | 26 | 25 | | | 22 | | | | | | | | 14 | 13 | | | | 9 | 8 | | | | | 3 | | | 4-1456659-8 | 5L3T-14A464-DA-066 |
| | | | | | | 65 | | | | | | | | | | | | | 52 | | | | 48 | 47 | | | | | | | 40 | | 38 | | 36 | 35 | | | 32 | 31 | 30 | 29 | | | | | | | 22 | 21 | 20 | | 18 | 17 | 16 | 15 | 14 | 13 | 12 | 11 | | 9 | 8 | 7 | 6 | | | | | | 4-1456659-7 | 5L3T-14A464-DA-065 |
| | | | 68 | 67 | | | 64 | 63 | 62 | | | | | 57 | | | | | | | 50 | 49 | 48 | | | | 44 | 43 | 42 | | 40 | | | | | | | 33 | 32 | 31 | 30 | | | 27 | | | 24 | | | 21 | 20 | 19 | 18 | | | | | | | | | | | | | | | | | | 3-1456659-8 | 5L3T-14A464-DA-064 |
| | | | 68 | 67 | | | | | 62 | 61 | | | | | | | | 53 | 52 | | | 49 | | | | | | 43 | | | | | | 37 | 36 | | | | 32 | | 30 | 29 | 28 | | | | | | 22 | | | | 18 | | 16 | | 14 | 13 | | | 10 | 9 | 8 | | | | | | | | 3-1456659-4 | 5L3T-14A464-DA-063 |
| | | | | | | 65 | | | | | | | | | | | | 53 | 52 | | | | 48 | 47 | 46 | 45 | 44 | | | | | | 38 | 37 | | | | | | 31 | 30 | 29 | 28 | 27 | 26 | 25 | 24 | 23 | 22 | 21 | 20 | | 18 | | | | | 13 | | | 10 | | | 7 | 6 | | | | | | 3-1456659-1 | 5L3T-14A464-DA-062 |
| | | | 68 | 67 | | 65 | 64 | | | | | | | | 56 | | | | | | 50 | | | | | | 44 | 43 | 42 | | 40 | 39 | | | | | | 33 | | 31 | 30 | | | 27 | | | | 23 | | | 20 | | 18 | | | | | 13 | | | | | 8 | 7 | | 5 | | | 2 | 1 | 2-1456659-9 | 5L3T-14A464-DA-061 |
| | | | | | | | 64 | 63 | 62 | | | | | | 56 | | | | | | | | | | | | | | 42 | | 40 | 39 | | | | | | 33 | | | | | | 27 | | | 24 | | | 21 | 20 | | 18 | | | | | 13 | | | | | 8 | 7 | | | | | | | 2-1456659-0 | 5L3T-14A464-DA-060 |
| | | | 68 | 67 | | 65 | | 63 | 62 | | | | | | | | | | | | 50 | | | | | | 44 | 43 | 42 | | 40 | | | | | | | 33 | | | | | | 27 | 26 | 25 | 24 | 23 | 22 | 21 | 20 | | 18 | | | | | | | | | | | 7 | 6 | | 4 | 3 | 2 | 1 | 1-1456659-9 | 5L3T-14A464-DA-059 |
| CAVITIES WITH A NUMERIC SYMBOL INDICATES CLOSED TERMINAL LOCATIONS | | | 68 | 67 | | | 64 | 63 | 62 | | | | | | | | | | | | 50 | | | | | | 44 | 43 | 42 | | 40 | | | | | | | 33 | | | | | | 27 | | | 24 | | | 21 | 20 | | 18 | | | | | | | | | | | 7 | | | | | 2 | | 1-1456659-8 | 5L3T-14A464-DA-058 |
| | | | 68 | 67 | | | | | | | | | | | | | | | | | 50 | | | | | | 44 | 43 | 42 | | 40 | | | | | | | 33 | 32 | | | | | 27 | | | 24 | 23 | | | 20 | 19 | 18 | | | | | | | | | | | | | | | | | | 1456659-3 | 5L3T-14A464-DA-057 |
| BLANK CAVITIES INDICATES OPEN TERMINAL HOLE LOCATIONS | | | | | | 65 | 64 | | | | | | | | 56 | | | | | | 50 | | | | | | 44 | 43 | 42 | | 40 | 39 | | | | | | 33 | | 31 | 30 | | | 27 | | | | 23 | | | 20 | | 18 | | | | | 13 | | | | | 8 | 7 | | 5 | | | 2 | 1 | 9-1438136-9 | 5L3T-14A464-DA-056 |
| | | | | | | 65 | 64 | 63 | 62 | | | | | | 56 | | | | | | | | | | | | | | 42 | | 40 | 39 | | | | | | 33 | | | | | | 27 | | | | 23 | | 21 | 20 | | 18 | | | | | 13 | | | | | 8 | 7 | | | | 3 | 2 | 1 | 9-1438136-8 | 5L3T-14A464-DA-055 |
| TERMINAL HOLE POSITION | 70 | 69 | 68 | 67 | 66 | 65 | 64 | 63 | 62 | 61 | 60 | 59 | 58 | 57 | 56 | 55 | 54 | 53 | 52 | 51 | 50 | 49 | 48 | 47 | 46 | 45 | 44 | 43 | 42 | 41 | 40 | 39 | 38 | 37 | 36 | 35 | 34 | 33 | 32 | 31 | 30 | 29 | 28 | 27 | 26 | 25 | 24 | 23 | 22 | 21 | 20 | 19 | 18 | 17 | 16 | 15 | 14 | 13 | 12 | 11 | 10 | 9 | 8 | 7 | 6 | 5 | 4 | 3 | 2 | 1 | ASSEMBLY PART NUMBER | FORD PART NUMBER |

5L3T-14A464-D* PIN-OUT CHART

THIS DRAWING IS A CONTROLLED DOCUMENT.

| | |
|---|---|
| DWN | R. VESTAL 15APR2005 |
| CHK | T. VALASEK 15APR2005 |
| APVD | T. VALASEK 15APR2005 |
| PRODUCT SPEC | - |
| APPLICATION SPEC | - |
| WEIGHT | - |
| DIMENSIONS: | mm |
| TOLERANCES UNLESS OTHERWISE SPECIFIED: | 0 PLC ±- ; 1 PLC ±0.3 ; 2 PLC ±0.10 ; 3 PLC ±- ; 4 PLC ±- ; ANGLES ±1° |
| MATERIAL | - / - |
| FINISH | - / - |

TE Connectivity

NAME: 70-WAY HARNESS ASSEMBLY

| SIZE | CAGE CODE | DRAWING NO | RESTRICTED TO |
|---|---|---|---|
| A1 | 00779 | C-1438136 | - |

CUSTOMER DRAWING | SCALE 2:1 | SHEET 4 OF 11 | REV G47

| 8 | 7 | 6 | 5 | 4 | 3 | 2 | 1 |
|---|---|---|---|---|---|---|---|

THIS DRAWING IS UNPUBLISHED. RELEASED FOR PUBLICATION 20
© COPYRIGHT 20 BY - ALL RIGHTS RESERVED.

REVISIONS

| P | LTR | DESCRIPTION | DATE | DWN | APVD |
|---|---|---|---|---|---|
| | - | SEE SHEET 1 | - | - | - |

## KEYING OPTION B

| | | | | | | | | | | | | | | | | | | | | | | | | | | | | | | | | | | | | | | | | | | | | | | | | | | | | | | | | | | | | | | | | | | | | | | | | |
|---|---|---|---|---|---|---|---|---|---|---|---|---|---|---|---|---|---|---|---|---|---|---|---|---|---|---|---|---|---|---|---|---|---|---|---|---|---|---|---|---|---|---|---|---|---|---|---|---|---|---|---|---|---|---|---|---|---|---|---|---|---|---|---|---|---|---|---|---|---|---|---|---|
||||||||||63|||60||||||||||||49||||45|||||40|39|38||36||||32|31|||||||24||||20|19||17||15|14|13|12|11|10||||6|5|4|||1|2035383-4|5L3T-14A464-EA-047|
||||||||||63|||60||||||||||||49||||45|||||40|39|38||36||||32|31|||||||24||||20|19||17|16|15|14|13|12|11|10||||6|5|4|||1|2035383-3|5L3T-14A464-EA-046|
|||69|68||66|65|64|||||59||||55|54|53|52|51|50|49|48|47|||||||||39|38|37||35|34|33|32|31|30||||||||21|20|19|18||||14|||||||||5||||1|7-1456659-0|5L3T-14A464-EA-045|
||70||||||||||||||||||||50|49|48||||||||40|39|38||36||||32|31|||||||24|23|22||20|19|||16|15|14|13|12|11||9||7|6|5||||1|5-1456659-0|5L3T-14A464-EA-044|
||||||||||63|||60||||||||||||49||||45|||||40|39|38||36||||32|31|||||||24||||20|19|||16|15|14|13|12|11|10||||6|5|4|||1|4-1456659-6|5L3T-14A464-EA-043|
||||||||||63|||60||||||||||||49||||45|||||40|39|38||36||||32|31|||||||24||||20|19|||16|15|||12|11|10||||6|5|4|||1|4-1456659-0|5L3T-14A464-EA-042|
|||||||||64||||60||||||||||||49|||||||42|41|||||||||32|31|||||||||||||||16|15|14|13|12|||9|8||6|5|4|||1|3-1456659-0|5L3T-14A464-EA-041|
||70|||||65|||||||||||||53|||50|49|48||||||||40|39|38||36||||32|31|||||||24|23|22||20||18|17||15|14|13|12|11||9||7|6|5||||1|2-1456659-4|5L3T-14A464-EA-040|
||70||||||||||||||||||||50|49|48||||||||40|39|38||36||||32|31|||||||24|23|22||20||||16|15|14|13|12|11||9||7|6|5||||1|2-1456659-3|5L3T-14A464-EA-039|
||70|||||65|||||||||||||||||49|48||||||||40|39|38||36||||32|31|||||||24|23|22||20||18|17||15|14|13|12|11||9||7|6|5|||||2-1456659-2|5L3T-14A464-EA-038|
||70|||||65||||||||||||||||50|49|48||||||||40|39|38||36||||32|31|||||||24|23|22||20||18|17||15|14|13|12|11||9||7|6|5||||1|2-1456659-1|5L3T-14A464-EA-037|
||||||||||||||||||||||||49|||||||42|41||39|38||||||32|31|||||||||||||||16|15|14|13|12|||9|8||6|5|4|||1|1-1456659-7|5L3T-14A464-EA-036|
||||||||||||60||||||||||||49||||45|||||40|39|38||36||||32|31|||||||24||||20|19||||15|14|13|12|11|10||||6|5|4|||1|1-1456659-6|5L3T-14A464-EA-035|
||||||||||||||||||||||||49|||||||42|41|||||||||||||||||||||||||||||||||9|8||6|5|4|||1|1-1456659-5|5L3T-14A464-EA-034|
|||||||||64||||60||||||||||||49|||||||42|41||39|38||||||||||||||||||||||||||||||9|8||6|5|4|||1|1-1456659-4|5L3T-14A464-EA-033|
||||||||||||||||||||||||49|||||||42|41|||||||||32|31|||||||||||||||16|15|14|13|12|||9|8||6|5|4|||1|1-1456659-3|5L3T-14A464-EA-032|
||70|||||65|||||||||||||53||||49|48||||||||40|39|38||36|||33|32|31|||||||24|23|22||20|19|18|17||15|14|13|12|11||9||7|6|5||||1|1-1456659-1|5L3T-14A464-EA-031|
|||||||||64||||60||||||||||||49||||||||||||||37|36|35|||32|31|||||||||||||||16|15|14|13|12|||9|||6|5|4|||1|1456659-7|5L3T-14A464-EA-030|
||||||||||63|||60||||||||||||49||||45|||||40|39|38||36||||32|31|||||||24||||20|19||||15|14|13|12|11|10||||6|5|4|||1|1456659-2|5L3T-14A464-EA-029|
||||||||||||||||||||||||49||||||43|42|41|||||||||||||||||||||||||||||||||9|8|7|6|5|4|||1|8-1438136-7|5L3T-14A464-EA-028|
|||||||||64||||60||||||||||||49||||||43|42|41||39|38||||||||||||||||||||||||||||||9|8|7|6|5|4|||1|8-1438136-6|5L3T-14A464-EA-027|
||||||||||||||||||||||||49||||||43|42|41|||||||||32|31|||||||||||||||16|15|14|13|12|||9|8|7|6|5|4|||1|8-1438136-5|5L3T-14A464-EA-026|
||||||||||63|||60||||||||||||49||||45|||||40|39|38||36|35|||32|31|||||||24||||20|19||||15|14|13|12|11|10||||6|5|4|||1|8-1438136-0|5L3T-14A464-EA-025|
||||||||||||||||||||||||||||||45|||||40|39|38||36|35|||32|31|||||||24||||20|19||||15|14|13|12|11|10||||||4|||1|7-1438136-9|5L3T-14A464-EA-024|
|||||||||64||||60||||||||||||49||||||||||||||37|36|35|||32|31|||||||24|||||||17|16|15|14|13|12|||9|||6|5|4|||1|7-1438136-6|5L3T-14A464-EA-023|
||70|||||65|||||||||||||53|||50|49|48||||||||40|39|38||36||||32|31|||||||24|23|22||20|19|18|17||15|14|13|12|11||9||7|6|5||||1|7-1438136-0|5L3T-14A464-EA-022|
||||||||||||60||||||||||||49||||45|||||40|39|38||36|35|||32|31|||||||24||||20|19||||15|14|13|12|11|10||||6|5|4|||1|6-1438136-1|5L3T-14A464-EA-021|
|||||||65|64||||60||||||||||50|49|48|||||||||39|38|||||||||||||||||||20||||16|15|14|13|12|11|10|9|8|7|6|5|4|||1|5-1438136-4|5L3T-14A464-EA-020|
|||||||65||||||||||||||||50|49|48|||||||||||||||||||||||||||||||20|||||||||11|10|9|8|7|6|5|4|||1|5-1438136-3|5L3T-14A464-EA-019|
|||||||65|64||||60||||||||||50|49|48|||||||||39|38|||||||||||||||||||20|||||||||11|10|9|8|7|6|5|4|||1|5-1438136-2|5L3T-14A464-EA-018|
|||||||65||||||||||||||||50|49|48|||||||||||||||||32|31|||||||||||20||||16|15|14|13|12|11|10|9|8|7|6|5|4|||1|5-1438136-1|5L3T-14A464-EA-017|
||70||||||||||||||||||||50|49|48||||||||40|39|38||36||||32|31|||||||24|23|22||20|19|||16|15|14|13|12|11|10|9||7|6|5||||1|5-1438136-0|5L3T-14A464-EA-016|
||70|||||65||||||||||||||||50|49|48||||||||40|39|38||36||||32|31|||||||24|23|22||20|19|18|17||15|14|13|12|11|10|9||7|6|5||||1|4-1438136-8|5L3T-14A464-EA-015|
||70|||||65||||||||||||||||50|49|48||||||||40|39|38||36||||32|31|||||||24|23|22||20|19|18|17||15|14|13|12|11||9||7|6|5||||1|4-1438136-7|5L3T-14A464-EA-014|
||70|||||65|||||||||||||||||49|48||||||||40|39|38||36||||32|31|||||||24|23|22||20|19|18|17||15|14|13|12|11|10|9||7|6|5|||||4-1438136-6|5L3T-14A464-EA-013|
|||||||65|64||||60||||||||||50|49|48|||||||||||||||||32|31|||||||||||20||||16|15|14|13|12|11|10|9|8|7|6|5|4|||1|4-1438136-5|5L3T-14A464-EA-012|
|||||||65|64||||60||||||||||50|49|48|||||||||39|38||||||32|31|||||||||||20||||16|15|14|13|12|11|10|9|8|7|6|5|4|||1|4-1438136-4|5L3T-14A464-EA-011|
|||||||65|64||||60||||||||||50|49|48||||||||40|||||||33|32|31|||||||||||20|||17|16|15|14|13|12|11|10|9|8|7|6|5|4|||1|2-1438136-9|5L3T-14A464-EA-010|
|||||||65|64||||60||||||||||50|49|48||||||||40|||||||33|||||||||||||20|||17||||||11|10|9|8|7|6|5|4|||1|2-1438136-8|5L3T-14A464-EA-009|
|||||||65|64||||60||||||||||50|49|48||||||||40|39|38|||||33|32|31|||||||||||20|||17|16|15|14|13|12|11|10|9|8|7|6|5|4|||1|2-1438136-5|5L3T-14A464-EA-008|
|||||||65|64||||60||||||||||50|49|48||||||||40|39|38|||||33|||||||||||||20|||17||||||11|10|9|8|7|6|5|4|||1|2-1438136-1|5L3T-14A464-EA-007|
|||||||65|64||||60||||||||||50|49|48||||||||40|39|38|||||33|32|31|||||||||||20|||17|16|15|14|13|12|11|10|9|8|7|6|5|4|||1|2-1438136-0|5L3T-14A464-EA-006|
|||||||65|64||||60||||||||||50|49|48|||45|||||40|39|38|||||33|32|31|||||||||||20|||17|16|15|14|13|12|11|10|9|8|7|6|5|4|||1|1-1438136-9|5L3T-14A464-EA-005|
|||||||65|64||||60||||||||||50|49|48|||45|||||40|39|38|||||33|||||||||||||20|||17||||||11|10|9|8|7|6|5|4|||1|1-1438136-8|5L3T-14A464-EA-004|
|CAVITIES WITH A NUMERIC SYMBOL INDICATES CLOSED TERMINAL LOCATIONS||||||65|64||||60||||||||||50|49|48||||||||40|39|38|||||33|||||||||||||20|||17||||||11|10|9|8|7|6|5|4|||1|1-1438136-7|5L3T-14A464-EA-003|
|||||||65|64||||60||||||||||50|49|48||||||||40|39|38|||||33||||||||||||||||17||||||11|10|9|8|7|6|5|||||1-1438136-2|5L3T-14A464-EA-002|
|BLANK CAVITIES INDICATES OPEN TERMINAL HOLE LOCATIONS||||||65|64||||60||||||||||50|49|48||||||||40|39|38|||||33||||||||||||||||17||||||11|10|9|8|7|6|5|4|||1|1-1438136-1|5L3T-14A464-EA-001|
|||||||||||||||||||||||||||||||||||||||||||||||||||||||||||||||||||||||||1438136-2|5L3T-14A464-EA-000|
|TERMINAL HOLE POSITION|70|69|68|67|66|65|64|63|62|61|60|59|58|57|56|55|54|53|52|51|50|49|48|47|46|45|44|43|42|41|40|39|38|37|36|35|34|33|32|31|30|29|28|27|26|25|24|23|22|21|20|19|18|17|16|15|14|13|12|11|10|9|8|7|6|5|4|3|2|1|ASSEMBLY PART NUMBER|FORD PART NUMBER|

5L3T-14A464-E* PIN-OUT CHART

THIS DRAWING IS A CONTROLLED DOCUMENT.

DIMENSIONS: mm

TOLERANCES UNLESS OTHERWISE SPECIFIED:
0 PLC ±-
1 PLC ±0.3
2 PLC ±0.10
3 PLC ±-
4 PLC ±-
ANGLES ±1°

MATERIAL - -
FINISH - -

DWN R. VESTAL 15APR2005
CHK T. VALASEK 15APR2005
APVD T. VALASEK 15APR2005
PRODUCT SPEC -
APPLICATION SPEC -
WEIGHT -

TE Connectivity

NAME 70-WAY HARNESS ASSEMBLY

SIZE A1 | CAGE CODE 00779 | DRAWING NO C-1438136 | RESTRICTED TO -

CUSTOMER DRAWING | SCALE 2:1 | SHEET 5 OF 11 | REV G47

| THIS DRAWING IS UNPUBLISHED. | RELEASED FOR PUBLICATION 20 |
|---|---|
| © COPYRIGHT 20 BY - | ALL RIGHTS RESERVED. |

REVISIONS

| P | LTR | DESCRIPTION | DATE | DWN | APVD |
|---|---|---|---|---|---|
| | - | SEE SHEET 1 | - | - | - |
| | | | | | |
| | | | | | |
| | | | | | |

KEYING OPTION C

| | | | | | | | | | | | | | | | | | | | | | | | | | | | | | | | | | | | | | | | | | | | | | | | | | | | | | | | | | | | | | | | | | | | | | | | | | |
|---|---|---|---|---|---|---|---|---|---|---|---|---|---|---|---|---|---|---|---|---|---|---|---|---|---|---|---|---|---|---|---|---|---|---|---|---|---|---|---|---|---|---|---|---|---|---|---|---|---|---|---|---|---|---|---|---|---|---|---|---|---|---|---|---|---|---|---|---|---|---|---|---|
| | | | | | | | | | | | | | | | | | | | | | | | | | | | | | | | | | | | | | | | | | | | | | | | | | | | | | | | | | | | | | | | | | | | | | | | | |
| | 70 | | | | 66 | 65 | | | | | 60 | 59 | | | 56 | | | 53 | 52 | | | | 48 | 47 | 46 | 45 | 44 | | | | | | 38 | 37 | | | | | | 31 | 30 | 29 | 28 | | | 25 | 24 | | 22 | 21 | 20 | 19 | 18 | | | | | | 12 | | 10 | 9 | 8 | 7 | 6 | 5 | | | | | 9-2035383-8 | 8U5T-14A464-AA-042 |
| | 70 | 69 | 68 | 67 | | 65 | 64 | 63 | 62 | 61 | 60 | 59 | | | 56 | | | | | 51 | 50 | 49 | 48 | 47 | 46 | 45 | 44 | 43 | 42 | 41 | 40 | | | | 36 | | 34 | 33 | | 31 | 30 | 29 | 28 | 27 | 26 | 25 | 24 | 23 | 22 | 21 | 20 | | 18 | 17 | 16 | 15 | 14 | 13 | 12 | 11 | 10 | 9 | 8 | 7 | 6 | 5 | 4 | | 2 | 1 | 9-2035383-1 | 8U5T-14A464-AA-041 |
| | 70 | | | | 66 | 65 | | | | | 60 | 59 | | | 56 | | | 53 | 52 | | | | 48 | 47 | 46 | 45 | 44 | | | | | | 38 | | | | | | | 31 | 30 | 29 | 28 | | | 25 | 24 | | 22 | 21 | 20 | 19 | 18 | | | | | | 12 | | 10 | 9 | 8 | 7 | 6 | 5 | | | | | 8-2035383-3 | 8U5T-14A464-AA-040 |
| | 70 | | 68 | | 66 | 65 | | | | | 60 | 59 | | | 56 | | | 53 | | | | | 48 | 47 | 46 | 45 | 44 | | | | | | 38 | | | | | | | 31 | 30 | 29 | 28 | | | 25 | 24 | | 22 | 21 | 20 | 19 | | | | | | | 12 | | 10 | 9 | 8 | 7 | 6 | 5 | | | | | 6-2035383-5 | 8U5T-14A464-AA-039 |
| | | | | | | 65 | | | | | | | | | | | | | | | | | | | | | | | | | 40 | | 38 | | 36 | 35 | | | | 31 | 30 | 29 | | | | | | | | 21 | 20 | | | 17 | 16 | 15 | 14 | | 12 | 11 | | 9 | 8 | 7 | 6 | | | | | | 6-2035383-0 | 8U5T-14A464-AA-038 |
| | | | | | | 65 | | | | | | | | | | | | | | | | | | | | | | | | | 40 | | 38 | | 36 | 35 | | | | 31 | 30 | 29 | | | | | | | | 21 | 20 | | | 17 | 16 | | | | 12 | 11 | | 9 | 8 | 7 | 6 | | | | | | 5-2035383-8 | 8U5T-14A464-AA-037 |
| | | | | | | 65 | | | | | | | | | | | | | | | | | | | | | | | | | 40 | | 38 | | 36 | 35 | | | | | 30 | | | | | | | | 22 | 21 | 20 | | | 17 | 16 | 15 | 14 | | 12 | 11 | | 9 | 8 | 7 | 6 | | | | | | 5-2035383-3 | 8U5T-14A464-AA-036 |
| | | | | | | 65 | | | | | | | | | | | | | | | | | | | | | | | | | 40 | | 38 | | 36 | 35 | | | | 31 | 30 | 29 | | | | | | | 22 | 21 | 20 | | | 17 | 16 | 15 | 14 | | 12 | 11 | | 9 | 8 | 7 | 6 | | | | | | 4-2035383-3 | 8U5T-14A464-AA-035 |
| | | | | | | 65 | | | | | | | | | | | | | | | | | | | | | | | | | 40 | | 38 | | 36 | 35 | | | | 31 | 30 | 29 | | | | | | | 22 | 21 | 20 | | | 17 | 16 | 15 | 14 | | 12 | 11 | | 9 | 8 | | 6 | | | | | | 3-2035383-9 | 8U5T-14A464-AA-034 |
| | | | | | | 65 | | | | | | | | | | | | | | | | | | | | | | | | | 40 | | 38 | | 36 | 35 | | | | 31 | 30 | | | | | | | | 22 | 21 | 20 | | | 17 | 16 | 15 | 14 | | 12 | 11 | | 9 | 8 | 7 | 6 | | | | | | 2-2035383-3 | 8U5T-14A464-AA-033 |
| | | | | | | 65 | | | | | | | | | | | | | | | | | | | | | | | | | 40 | | 38 | | 36 | 35 | | | | 31 | 30 | | | | | | | | 22 | 21 | 20 | | | 17 | 16 | 15 | 14 | | 12 | 11 | | 9 | 8 | | 6 | | | | | | 2-2035383-1 | 8U5T-14A464-AA-032 |
| | | | | | | | | 63 | | | | | | | | | | 53 | 52 | | | 49 | 48 | | | | | | | | 40 | | | 37 | 36 | | | | 32 | | 30 | 29 | | | | | | | 22 | 21 | | | 18 | | 16 | | 14 | 13 | | | 10 | 9 | 8 | 7 | | | | | | | 2-2035383-0 | 8U5T-14A464-AA-031 |
| | | | | | | 65 | | | | | | | | | | | | | | | | | | | | | | | | | 40 | | 38 | | 36 | 35 | | | | 31 | 30 | | | | | | | | 22 | 21 | 20 | | | 17 | 16 | 15 | 14 | | 12 | 11 | | 9 | 8 | 7 | | | | | | | 1-2035383-7 | 8U5T-14A464-AA-030 |
| | | | | | | | | | | | 60 | 59 | 58 | 57 | | | | 53 | 52 | | | | | | | | 44 | | | | | | | | 36 | | | | | | | | 28 | | | | 24 | | | | | | | | | | | 13 | | 11 | | | 8 | 7 | | | | | | | 1-2035383-5 | 8U5T-14A464-AA-029 |
| | 70 | | 68 | | 66 | 65 | | | | | 60 | 59 | | | 56 | | | 53 | 52 | | | | 48 | 47 | 46 | 45 | 44 | | | | | | 38 | | | | | | | 31 | 30 | 29 | 28 | | | 25 | 24 | | 22 | 21 | 20 | 19 | 18 | | | | | 13 | 12 | | 10 | 9 | | 7 | 6 | 5 | | | | | 1-2035383-1 | 8U5T-14A464-AA-028 |
| | | | | | | | | 63 | | | | | | | | | | 53 | 52 | | | 49 | 48 | | | | | | | | 40 | | | 37 | 36 | | | | 32 | | 30 | 29 | | | | | | | 22 | 21 | | | 18 | | 16 | | 14 | 13 | | | 10 | 9 | 8 | 7 | 6 | | | | | | 2035383-6 | 8U5T-14A464-AA-027 |
| | | | | | | | | 63 | | | | | | | | | | 53 | 52 | | | 49 | 48 | | | | | | | | 40 | | | 37 | 36 | | | | 32 | | 30 | 29 | | | | | | | | 21 | | | 18 | | 16 | | 14 | 13 | | | 10 | 9 | 8 | 7 | 6 | | | | | | 2035383-5 | 8U5T-14A464-AA-026 |
| | | | 68 | 67 | | | | | 62 | 61 | | | | | | | | 53 | 52 | | | 49 | | | | | | 43 | | | | | | 37 | 36 | | | | 32 | | 30 | 29 | 28 | | | | | | 22 | | | | 18 | | 16 | | 14 | 13 | | | 10 | 9 | 8 | 7 | 6 | | | | | | 9-1456659-9 | 8U5T-14A464-AA-025 |
| | | | 68 | | | 65 | | | 62 | 61 | | | | | | 55 | | 53 | | | | 49 | 48 | | | | | 43 | | 41 | | 39 | | | | 35 | | 33 | 32 | | 30 | 29 | 28 | 27 | | 25 | 24 | | | 21 | 20 | | 18 | 17 | 16 | | 14 | 13 | 12 | | 10 | 9 | | 7 | 6 | 5 | | | | | 8-1456659-6 | 8U5T-14A464-AA-024 |
| | | | | | | 65 | | | | | | | | | | | | | 52 | | | | 48 | 47 | 46 | 45 | 44 | | | | | | 38 | | | | | | | 31 | 30 | 29 | 28 | | | | | | 22 | 21 | 20 | | 18 | | | | | 13 | | | | 9 | 8 | 7 | | | | | | | 8-1456659-5 | 8U5T-14A464-AA-023 |
| | | | | | | 65 | | | | | | | | | | | | | 52 | | | | 48 | 47 | | | | | | | 40 | | 38 | | 36 | 35 | | | | 31 | 30 | 29 | | | | | | | 22 | 21 | 20 | | 18 | 17 | 16 | 15 | 14 | 13 | 12 | 11 | | 9 | 8 | 7 | 6 | | | | | | 7-1456659-3 | 8U5T-14A464-AA-022 |
| | | | | | | 65 | | | | | | | | | | | | | 52 | | | | 48 | 47 | | | | | | | 40 | | 38 | | 36 | 35 | | | | 31 | 30 | 29 | | | | | | | 22 | 21 | 20 | | 18 | 17 | 16 | 15 | 14 | 13 | 12 | 11 | | 9 | 8 | | | | | | | | 6-1456659-4 | 8U5T-14A464-AA-021 |
| | | | | | | 65 | | | | | | | | | | | | 53 | 52 | | | | 48 | 47 | 46 | 45 | 44 | | | | | | 38 | 37 | | | | | | 31 | 30 | 29 | 28 | 27 | 26 | 25 | 24 | 23 | 22 | 21 | 20 | | 18 | | | | | 13 | | | 10 | | | 7 | | | | | | | 5-1456659-5 | 8U5T-14A464-AA-020 |
| | | | 68 | 67 | | | | 63 | 62 | 61 | | | | | | | | 53 | 52 | | | 49 | 48 | | | | | 43 | | | 40 | | | 37 | 36 | | | | 32 | | 30 | 29 | 28 | | | | | | 22 | 21 | | | 18 | | 16 | | 14 | 13 | | | 10 | 9 | 8 | 7 | 6 | | | | | | 5-1456659-3 | 8U5T-14A464-AA-019 |
| | | | | | | 65 | | | | | | | | | | | | 53 | 52 | | | | 48 | 47 | 46 | 45 | 44 | | | | | | 38 | 37 | | | | | | 31 | 30 | 29 | 28 | 27 | 26 | 25 | 24 | 23 | 22 | 21 | 20 | | 18 | | | | | 13 | | | 10 | | | 7 | 6 | | | | | | 4-1456659-5 | 8U5T-14A464-AA-018 |
| | | | 68 | | | 65 | | | 62 | 61 | | | | | | 55 | | 53 | | | | 49 | 48 | | | | | 43 | | 41 | | 39 | | | | 35 | | 33 | 32 | | 30 | 29 | 28 | 27 | | 25 | 24 | | 22 | 21 | 20 | | 18 | 17 | 16 | | 14 | 13 | 12 | | 10 | 9 | | 7 | 6 | 5 | | | | | 4-1456659-4 | 8U5T-14A464-AA-017 |
| | 70 | | 68 | | 66 | 65 | | | | | 60 | 59 | | | 56 | | | 53 | 52 | | | | 48 | 47 | 46 | 45 | 44 | | | | | | 38 | 37 | | | | | | 31 | 30 | 29 | 28 | 27 | 26 | 25 | 24 | 23 | 22 | 21 | 20 | 19 | 18 | | | | | 13 | 12 | | 10 | 9 | | 7 | 6 | 5 | | | | | 4-1456659-3 | 8U5T-14A464-AA-016 |
| | 70 | | 68 | | 66 | 65 | | | | | 60 | 59 | | | 56 | | | 53 | 52 | | | | 48 | 47 | 46 | 45 | 44 | | | | | | 38 | | | | | | | 31 | 30 | 29 | 28 | | | 25 | 24 | | 22 | 21 | 20 | 19 | 18 | | | | | 13 | 12 | | 10 | 9 | 8 | 7 | 6 | 5 | | | | | 4-1456659-2 | 8U5T-14A464-AA-015 |
| | | | 68 | 67 | | | | 63 | 62 | 61 | | | | | | | | 53 | 52 | | | 49 | 48 | | | | | 43 | | | 40 | 39 | 38 | 37 | 36 | | | | 32 | | 30 | 29 | 28 | | 26 | 25 | 24 | 23 | 22 | 21 | | | 18 | | 16 | | 14 | 13 | | | 10 | 9 | 8 | 7 | | | | | | | 3-1456659-9 | 8U5T-14A464-AA-014 |
| | | | 68 | 67 | | | | | 62 | 61 | | | | | | | | 53 | 52 | | | 49 | | | | | | 43 | | | | 39 | 38 | 37 | 36 | | | | 32 | | 30 | 29 | 28 | | 26 | 25 | 24 | 23 | 22 | | | | 18 | | 16 | | 14 | 13 | | | 10 | 9 | 8 | | | | | | | | 3-1456659-7 | 8U5T-14A464-AA-013 |
| | | | 68 | 67 | | | | | 62 | 61 | | | | | | | | 53 | 52 | | | 49 | | | | | | 43 | | | | | | 37 | 36 | | | | 32 | | 30 | 29 | 28 | | | | | | 22 | | | | 18 | | 16 | | 14 | 13 | | | 10 | 9 | 8 | | | | | | | | 3-1456659-6 | 8U5T-14A464-AA-012 |
| | | | | | | | | 63 | | | | | | | | | | 53 | 52 | | | 49 | 48 | | | | | | | | 40 | | | 37 | 36 | | | | 32 | | 30 | 29 | | | | | | | | 21 | | | 18 | | 16 | | 14 | 13 | | | 10 | 9 | 8 | | 6 | | | | | | 3-1456659-5 | 8U5T-14A464-AA-011 |
| | | | | | | | | 63 | | | | | | | | | | 53 | 52 | | | 49 | 48 | | | | | | | | 40 | | | 37 | 36 | | | | | | 30 | 29 | | | | | | | | 21 | | | 18 | | 16 | | 14 | 13 | | | 10 | 9 | 8 | | 6 | | | | | | 3-1456659-3 | 8U5T-14A464-AA-010 |
| | | | | | | | | 63 | | | | | | | | | | 53 | 52 | | | 49 | 48 | | | | | | | | 40 | | | 37 | 36 | | | | 32 | | 30 | 29 | | | | | | | 22 | 21 | | | 18 | | 16 | | 14 | 13 | | | 10 | 9 | 8 | | 6 | | | | | | 3-1456659-2 | 8U5T-14A464-AA-009 |
| | | | 68 | 67 | | 65 | | | 62 | 61 | | | | | | 55 | | 53 | | | | 49 | 48 | | | | | 43 | | 41 | | 39 | 38 | | | 35 | | 33 | 32 | 31 | 30 | 29 | 28 | 27 | 26 | 25 | 24 | 23 | 22 | 21 | 20 | | 18 | 17 | 16 | | 14 | 13 | 12 | | 10 | 9 | | 7 | 6 | 5 | | | | | 1-1456659-0 | 8U5T-14A464-AA-008 |
| | | | 68 | 67 | | 65 | | | 62 | 61 | | | | | | 55 | | 53 | | | | 49 | 48 | | | | | 43 | | 41 | | 39 | 38 | | | 35 | | 33 | 32 | 31 | 30 | 29 | 28 | 27 | 26 | | 24 | 23 | | 21 | 20 | | 18 | 17 | 16 | | 14 | 13 | 12 | | 10 | 9 | | 7 | 6 | 5 | | | | | 1456659-9 | 8U5T-14A464-AA-007 |
| | | | 68 | 67 | | 65 | | | 62 | 61 | | | | | | 55 | | 53 | | | | 49 | 48 | | | | | 43 | | 41 | | 39 | 38 | | | 35 | | 33 | 32 | 31 | 30 | 29 | 28 | 27 | 26 | 25 | 24 | 23 | 22 | 21 | 20 | 19 | 18 | 17 | 16 | | 14 | 13 | 12 | | 10 | 9 | | 7 | 6 | 5 | | | | | 1456659-6 | 8U5T-14A464-AA-006 |
| | | | | | | | 64 | 63 | | | | | | | | | | | | | | 49 | 48 | | | | | | | | 40 | | | 37 | 36 | | | | | | 30 | 29 | | | | | | | | 21 | | | 18 | | 16 | | 14 | 13 | | | 10 | 9 | 8 | | 6 | | | | | | 1456659-5 | 8U5T-14A464-AA-005 |
| | | | | | | | | 63 | | | | | | | | | | | | | | 49 | 48 | | | | | | | | 40 | | | 37 | 36 | | | | | | 30 | 29 | | | | | | | | 21 | | | 18 | | 16 | | 14 | 13 | | | 10 | 9 | 8 | | 6 | | | | | | 1456659-4 | 8U5T-14A464-AA-004 |
| CAVITIES WITH A NUMERIC SYMBOL INDICATES CLOSED TERMINAL LOCATIONS | | | 68 | 67 | | 65 | | | 62 | 61 | | | | | | 55 | | 53 | | | | 49 | 48 | | | | | 43 | | 41 | | 39 | 38 | | | 35 | | 33 | 32 | 31 | 30 | 29 | 28 | 27 | 26 | | 24 | 23 | | 21 | 20 | 19 | 18 | 17 | 16 | | 14 | 13 | 12 | | 10 | 9 | | 7 | 6 | 5 | | | | | 9-1438136-7 | 8U5T-14A464-AA-003 |
| | | | 68 | | 66 | 65 | | | 62 | 61 | | | | | 56 | 55 | | 53 | | | | 49 | 48 | | | | | 43 | | 41 | | 39 | 38 | | | 35 | | 33 | 32 | 31 | 30 | 29 | 28 | 27 | 26 | 25 | 24 | 23 | | 21 | 20 | 19 | 18 | 17 | | | 14 | 13 | 12 | | 10 | 9 | | | | 5 | | | | | 9-1438136-4 | 8U5T-14A464-AA-002 |
| BLANK CAVITIES INDICATES OPEN TERMINAL HOLE LOCATIONS | 70 | 69 | | | | | | 63 | | | | | | | | | | | | | | 49 | 48 | | | | | | | | 40 | | | 37 | 36 | | | | | | 30 | 29 | | | | | | | | 21 | | | 18 | | 16 | | 14 | 13 | | | 10 | 9 | 8 | | 6 | | | | | | 9-1438136-3 | 8U5T-14A464-AA-001 |
| | | | | | | | | | | | | | | | | | | | | | | | | | | | | | | | | | | | | | | | | | | | | | | | | | | | | | | | | | | | | | | | | | | | | | | | 1438136-3 | 8U5T-14A464-AA-000 |
| TERMINAL HOLE POSITION | 70 | 69 | 68 | 67 | 66 | 65 | 64 | 63 | 62 | 61 | 60 | 59 | 58 | 57 | 56 | 55 | 54 | 53 | 52 | 51 | 50 | 49 | 48 | 47 | 46 | 45 | 44 | 43 | 42 | 41 | 40 | 39 | 38 | 37 | 36 | 35 | 34 | 33 | 32 | 31 | 30 | 29 | 28 | 27 | 26 | 25 | 24 | 23 | 22 | 21 | 20 | 19 | 18 | 17 | 16 | 15 | 14 | 13 | 12 | 11 | 10 | 9 | 8 | 7 | 6 | 5 | 4 | 3 | 2 | 1 | ASSEMBLY PART NUMBER | FORD PART NUMBER |

8U5T-14A464-A* PIN-OUT CHART

THIS DRAWING IS A CONTROLLED DOCUMENT.

| DIMENSIONS: mm | TOLERANCES UNLESS OTHERWISE SPECIFIED: 0 PLC ±- / 1 PLC ±0.3 / 2 PLC ±0.10 / 3 PLC ±- / 4 PLC ±- / ANGLES ±1° |
|---|---|
| MATERIAL - - | FINISH - - |

| DWN R. VESTAL | 15APR2005 |
|---|---|
| CHK T. VALASEK | 15APR2005 |
| APVD T. VALASEK | 15APR2005 |
| PRODUCT SPEC - | |
| APPLICATION SPEC - | |
| WEIGHT - | |
| CUSTOMER DRAWING | |

TE Connectivity

NAME: 70-WAY HARNESS ASSEMBLY

| SIZE | CAGE CODE | DRAWING NO | RESTRICTED TO |
|---|---|---|---|
| A1 | 00779 | C-1438136 | - |
| SCALE 2:1 | SHEET 6 OF 11 | REV G47 | |

4805 (3/13)

THIS DRAWING IS UNPUBLISHED. RELEASED FOR PUBLICATION 20
© COPYRIGHT 20 BY - ALL RIGHTS RESERVED.

REVISIONS

| P | LTR | DESCRIPTION | DATE | DWN | APVD |
|---|---|---|---|---|---|
| | - | SEE SHEET 1 | - | - | - |

KEYING OPTION D

| TERMINAL HOLE POSITION | ASSEMBLY PART NUMBER | FORD PART NUMBER |
|---|---|---|
| 57 55 51 49 43 36 35 33 30 27 25 24 23 22 18 17 15 11 10 9 8 6 3 2 1 | 3-2035383-0 | 8U5T-14A464-BA-056 |
| 56 55 54 52 51 49 39 36 35 34 33 31 27 26 25 24 23 22 18 17 15 12 9 4 1 | 2-2035383-9 | 8U5T-14A464-BA-055 |
| 55 54 51 49 41 36 35 34 33 30 27 26 24 23 22 18 17 15 11 9 8 6 4 3 2 1 | 2-2035383-7 | 8U5T-14A464-BA-054 |
| 64 63 55 54 51 49 48 41 36 33 30 27 26 25 24 23 18 15 9 4 | 2-2035383-5 | 8U5T-14A464-BA-053 |
| 57 56 55 54 51 49 39 36 35 33 27 26 25 24 23 22 17 15 12 10 9 8 5 4 1 | 2-2035383-4 | 8U5T-14A464-BA-052 |
| 57 56 55 54 51 49 39 36 35 33 27 26 25 24 23 22 17 15 12 11 10 9 8 6 5 4 3 1 | 1-2035383-9 | 8U5T-14A464-BA-051 |
| 64 63 55 54 51 49 48 41 36 33 30 27 26 25 18 15 9 4 | 1-2035383-8 | 8U5T-14A464-BA-050 |
| 57 55 54 49 43 41 39 35 33 30 26 24 23 22 17 15 11 10 9 8 6 5 4 3 2 1 | 1-2035383-3 | 8U5T-14A464-BA-049 |
| 57 55 54 51 49 43 41 39 36 35 33 30 27 26 25 24 23 22 17 15 11 10 9 8 6 5 4 3 2 1 | 1-2035383-2 | 8U5T-14A464-BA-048 |
| 57 55 54 49 41 40 39 33 30 27 26 25 18 17 15 11 10 9 8 6 5 3 2 1 | 2035383-9 | 8U5T-14A464-BA-047 |
| 64 63 55 54 51 49 48 41 36 33 30 27 26 25 18 15 9 4 2 | 2035383-7 | 8U5T-14A464-BA-046 |
| 57 56 55 54 51 49 39 36 35 33 27 26 25 24 23 22 17 12 11 10 9 8 6 5 4 3 1 | 2035383-1 | 8U5T-14A464-BA-045 |
| 55 54 49 39 33 30 27 26 25 18 17 15 11 10 9 8 6 5 3 2 1 | 9-1456659-8 | 8U5T-14A464-BA-044 |
| 56 55 54 52 51 49 39 36 35 34 33 31 27 26 25 24 23 18 17 15 12 11 10 9 8 6 5 4 3 1 | 9-1456659-6 | 8U5T-14A464-BA-043 |
| 57 55 54 53 51 49 37 33 32 30 27 26 25 24 23 22 19 17 16 15 12 9 7 3 2 1 | 9-1456659-3 | 8U5T-14A464-BA-042 |
| 57 55 54 53 52 51 49 37 33 32 31 30 27 25 24 23 22 19 17 16 15 12 9 7 3 1 | 9-1456659-1 | 8U5T-14A464-BA-041 |
| 57 55 54 51 49 43 39 36 35 33 30 27 26 25 22 18 17 15 11 10 9 8 6 4 3 2 1 | 8-1456659-9 | 8U5T-14A464-BA-040 |
| 57 55 54 51 49 43 39 36 35 33 27 26 25 24 23 22 18 17 15 11 10 9 8 6 4 3 2 1 | 8-1456659-8 | 8U5T-14A464-BA-039 |
| 57 55 54 53 51 49 37 35 34 33 32 30 27 26 25 24 23 22 19 18 17 16 15 12 9 8 7 3 2 1 | 8-1456659-7 | 8U5T-14A464-BA-038 |
| 57 55 54 51 49 43 39 36 35 33 30 27 26 25 24 23 22 18 17 15 11 10 9 8 6 4 3 2 1 | 8-1456659-4 | 8U5T-14A464-BA-037 |
| 57 55 54 49 39 33 30 27 26 25 24 23 18 17 15 11 10 9 8 6 5 3 2 1 | 8-1456659-3 | 8U5T-14A464-BA-036 |
| 57 55 54 49 39 33 30 27 26 25 18 17 15 11 10 9 8 6 5 3 2 1 | 8-1456659-2 | 8U5T-14A464-BA-035 |
| 57 55 54 49 41 40 39 33 30 26 25 18 17 15 11 10 9 8 6 5 3 2 1 | 8-1456659-1 | 8U5T-14A464-BA-034 |
| 56 55 54 51 49 39 36 35 34 33 31 26 25 24 23 18 17 15 12 9 4 1 | 8-1456659-0 | 8U5T-14A464-BA-033 |
| 56 55 54 52 51 49 39 36 35 34 33 31 27 26 25 24 23 18 17 15 12 9 4 1 | 7-1456659-9 | 8U5T-14A464-BA-032 |
| 56 55 54 52 51 49 39 36 35 34 33 31 27 26 25 24 23 18 17 15 12 11 10 9 8 6 4 3 1 | 7-1456659-8 | 8U5T-14A464-BA-031 |
| 57 56 55 54 51 49 39 36 35 33 27 26 25 24 23 22 18 17 11 10 9 8 6 5 4 3 7-1456659-7 | | 8U5T-14A464-BA-030 |
| 57 55 54 51 49 43 39 36 35 33 27 26 25 24 23 22 17 15 11 10 9 8 6 5 4 3 2 1 | 7-1456659-6 | 8U5T-14A464-BA-029 |
| 57 55 54 51 49 43 39 36 35 33 30 27 26 25 24 23 22 17 15 11 10 9 8 6 5 4 3 2 1 | 7-1456659-5 | 8U5T-14A464-BA-028 |
| 57 55 54 51 43 39 36 35 33 27 26 25 24 23 22 18 17 15 11 10 9 8 6 5 4 3 2 1 | 7-1456659-4 | 8U5T-14A464-BA-027 |
| 57 55 54 53 51 49 37 33 32 30 27 26 25 24 23 22 19 17 16 15 12 9 7 2 1 | 7-1456659-2 | 8U5T-14A464-BA-026 |
| 57 55 54 53 51 49 37 33 32 30 27 26 25 24 23 22 19 17 16 15 12 9 7 5 1 | 6-1456659-9 | 8U5T-14A464-BA-025 |
| 57 56 54 51 49 39 36 35 33 30 27 26 25 24 23 22 17 15 12 11 10 9 8 6 5 4 3 1 | 6-1456659-8 | 8U5T-14A464-BA-024 |
| 57 55 51 49 43 39 36 35 33 30 27 26 25 24 23 22 17 11 10 9 8 6 5 3 2 1 | 6-1456659-7 | 8U5T-14A464-BA-023 |
| 57 56 55 54 51 49 39 36 35 33 27 26 25 24 23 22 17 12 11 10 9 8 6 5 3 1 | 6-1456659-6 | 8U5T-14A464-BA-022 |
| 57 55 54 51 43 39 36 35 33 27 26 25 24 23 22 18 17 15 11 10 9 8 6 5 4 3 2 1 | 6-1456659-5 | 8U5T-14A464-BA-021 |
| 56 55 54 51 49 39 36 35 34 33 31 26 25 24 23 18 17 15 12 9 1 | 6-1456659-3 | 8U5T-14A464-BA-020 |
| 57 55 54 53 52 51 49 37 33 32 31 30 27 25 24 23 22 19 17 16 15 12 9 7 1 | 6-1456659-2 | 8U5T-14A464-BA-019 |
| 56 55 54 52 51 49 39 36 35 34 33 31 27 26 25 24 23 18 17 15 12 9 1 | 6-1456659-1 | 8U5T-14A464-BA-018 |
| 56 55 54 51 49 39 36 35 34 33 31 26 25 24 23 18 17 15 12 9 1 | 6-1456659-0 | 8U5T-14A464-BA-017 |
| 57 55 54 51 49 43 39 36 35 33 30 27 26 25 24 23 22 17 15 11 10 9 8 6 5 3 2 1 | 5-1456659-2 | 8U5T-14A464-BA-016 |
| 57 55 54 51 49 43 39 36 35 33 27 26 25 24 23 22 17 15 11 10 9 8 6 5 3 2 1 | 5-1456659-1 | 8U5T-14A464-BA-015 |
| 57 55 54 53 52 51 49 37 33 32 31 30 27 25 24 23 22 19 17 16 15 12 9 7 5 1 | 4-1456659-1 | 8U5T-14A464-BA-014 |
| 57 56 54 52 51 49 39 36 35 33 31 30 27 26 25 24 23 22 17 15 12 11 10 9 8 6 4 3 2 1 | 2-1456659-8 | 8U5T-14A464-BA-013 |
| 57 56 54 51 49 39 36 35 33 30 27 26 25 24 23 22 17 15 12 11 10 9 8 6 4 3 1 | 2-1456659-7 | 8U5T-14A464-BA-012 |
| 57 55 54 53 51 49 37 33 32 30 27 26 25 24 23 22 19 17 16 15 12 9 7 5 1 | 2-1456659-6 | 8U5T-14A464-BA-011 |
| 57 55 54 51 49 43 39 36 35 33 30 27 26 25 24 23 22 17 15 11 9 8 6 5 3 2 1 | 2-1456659-5 | 8U5T-14A464-BA-010 |
| 57 55 54 53 51 49 37 36 35 33 32 30 27 26 25 24 23 22 19 18 17 16 15 12 9 8 7 3 2 | 1-1456659-2 | 8U5T-14A464-BA-009 |
| 57 56 55 54 51 49 39 36 35 33 27 26 25 24 23 22 18 17 11 10 9 8 6 5 3 1456659-8 | | 8U5T-14A464-BA-008 |
| 57 56 55 54 51 49 39 36 35 33 30 27 26 25 24 23 22 18 17 11 10 9 8 6 5 3 1456659-1 | | 8U5T-14A464-BA-007 |
| 59 57 56 55 54 51 49 43 39 36 35 33 27 26 25 24 22 18 17 10 9 8 6 5 3 9-1438136-5 | | 8U5T-14A464-BA-006 |
| 57 56 54 51 49 39 36 35 33 30 27 26 25 24 23 22 17 15 12 11 10 9 8 7 6 4 3 1 | 9-1438136-2 | 8U5T-14A464-BA-005 |
| 57 56 54 52 51 49 39 36 35 33 31 30 27 26 25 24 23 22 17 15 12 11 10 9 8 7 6 4 3 2 1 | 9-1438136-1 | 8U5T-14A464-BA-004 |
| CAVITIES WITH A NUMERIC SYMBOL INDICATES CLOSED TERMINAL LOCATIONS: 57 56 54 51 49 39 36 35 33 30 27 26 25 24 23 22 17 15 12 11 10 9 8 7 6 5 3 1 | 9-1438136-0 | 8U5T-14A464-BA-003 |
| 57 56 54 52 51 49 39 36 35 33 31 30 27 26 25 24 23 22 17 15 12 11 10 9 8 7 6 5 3 2 1 | 8-1438136-9 | 8U5T-14A464-BA-002 |
| BLANK CAVITIES INDICATES OPEN TERMINAL HOLE LOCATIONS: 57 56 54 53 51 49 39 37 36 35 34 33 30 27 26 25 24 23 22 18 17 16 15 14 12 11 10 9 8 7 6 4 3 1 | 8-1438136-4 | 8U5T-14A464-BA-001 |
| HOLE LOCATIONS: | 1438136-4 | 8U5T-14A464-BA-000 |

8U5T-14A464-B* PIN-OUT CHART

THIS DRAWING IS A CONTROLLED DOCUMENT.

DIMENSIONS: mm

TOLERANCES UNLESS OTHERWISE SPECIFIED:
0 PLC ±-
1 PLC ±0.3
2 PLC ±0.10
3 PLC ±-
4 PLC ±-
ANGLES ±1°

MATERIAL - -

FINISH - -

DWN R. VESTAL 15APR2005
CHK T. VALASEK 15APR2005
APVD T. VALASEK 15APR2005

PRODUCT SPEC -
APPLICATION SPEC -
WEIGHT -

TE Connectivity

NAME 70-WAY HARNESS ASSEMBLY

SIZE A1 | CAGE CODE 00779 | DRAWING NO C-1438136 | RESTRICTED TO -

CUSTOMER DRAWING | SCALE 2:1 | SHEET 7 OF 11 | REV G47

4805 (3/13)

THIS DRAWING IS UNPUBLISHED. RELEASED FOR PUBLICATION 20
© COPYRIGHT 20 BY - ALL RIGHTS RESERVED.

REVISIONS

| P | LTR | DESCRIPTION | DATE | DWN | APVD |
|---|---|---|---|---|---|
| | - | SEE SHEET 1 | - | - | - |

KEYING OPTION D

| TERMINAL HOLE POSITION | 70 | 69 | 68 | 67 | 66 | 65 | 64 | 63 | 62 | 61 | 60 | 59 | 58 | 57 | 56 | 55 | 54 | 53 | 52 | 51 | 50 | 49 | 48 | 47 | 46 | 45 | 44 | 43 | 42 | 41 | 40 | 39 | 38 | 37 | 36 | 35 | 34 | 33 | 32 | 31 | 30 | 29 | 28 | 27 | 26 | 25 | 24 | 23 | 22 | 21 | 20 | 19 | 18 | 17 | 16 | 15 | 14 | 13 | 12 | 11 | 10 | 9 | 8 | 7 | 6 | 5 | 4 | 3 | 2 | 1 | ASSEMBLY PART NUMBER | FORD PART NUMBER |
|---|---|---|---|---|---|---|---|---|---|---|---|---|---|---|---|---|---|---|---|---|---|---|---|---|---|---|---|---|---|---|---|---|---|---|---|---|---|---|---|---|---|---|---|---|---|---|---|---|---|---|---|---|---|---|---|---|---|---|---|---|---|---|---|---|---|---|---|---|---|---|---|---|---|---|
| | | | | | | | 64 | 63 | | | | | | 57 | | 55 | 54 | | | 51 | | 49 | 48 | | | | | 43 | | | | 39 | | | 36 | | | | | 30 | | | 27 | 26 | 25 | | | 22 | | | | | | 15 | | | | 11 | | 9 | 8 | | 6 | 5 | 4 | 3 | 2 | 1 | 9-2035383-7 | 8U5T-14A464-BA-107 |
| | | | | | | | 64 | | | | | | | 57 | | 55 | 54 | | | 51 | | 49 | 48 | | | | | 43 | | 41 | | 39 | | | 36 | 35 | | 33 | | 30 | | | | 26 | 25 | 24 | 23 | 22 | | | 18 | 17 | | 15 | | | | 11 | 10 | 9 | 8 | | 6 | 5 | 4 | 3 | | 1 | 9-2035383-4 | 8U5T-14A464-BA-106 |
| | | | | | | | 64 | | | | | | | 57 | | 55 | 54 | | | 51 | | 49 | 48 | | | | | | | 41 | | | | | 36 | 35 | | 33 | | 30 | | | | 26 | 25 | 24 | 23 | | | | 18 | 17 | | 15 | | | | | | 9 | | | | | 4 | 3 | | 1 | 9-2035383-2 | 8U5T-14A464-BA-105 |
| | | | | | | | | | | | | | | | 56 | 55 | 54 | | | 51 | | 49 | | | | | | | | | | 39 | | | 36 | 35 | | 33 | | | | | 27 | 26 | 25 | 24 | 23 | | | | | 17 | | 15 | | | 12 | 11 | 10 | 9 | 8 | | 6 | | 4 | 3 | | 1 | 9-2035383-0 | 8U5T-14A464-BA-104 |
| | | | | 66 | 65 | 64 | 63 | | | | | | | 57 | | | 54 | | | 51 | | 49 | 48 | | | | | 43 | | | | | | | 36 | | | | | 30 | | | | 26 | 25 | | | 22 | | 20 | | | | 15 | | | | 11 | 10 | | 8 | | 6 | 5 | | 3 | 2 | | 8-2035383-9 | 8U5T-14A464-BA-103 |
| | | | | | | | 64 | 63 | | | | | | 57 | | | 54 | | | 51 | | 49 | 48 | | | | | 43 | | | | 39 | 38 | | 36 | | | | | 30 | | | 27 | 26 | 25 | | | 22 | | | | | | 15 | | | | 11 | 10 | | 8 | | 6 | 5 | 4 | 3 | 2 | | 8-2035383-8 | 8U5T-14A464-BA-102 |
| | | | | | | | 64 | 63 | | | | | | 57 | | | | | | 51 | | 49 | 48 | | | | | 43 | | | | 39 | 38 | | 36 | | | | | 30 | | | 27 | 26 | 25 | | | 22 | | | | | | 15 | | | | 11 | 10 | | 8 | | 6 | 5 | 4 | | 2 | | 8-2035383-7 | 8U5T-14A464-BA-101 |
| | | | | 66 | | | 64 | 63 | | | | | | 57 | | | 54 | | | 51 | | 49 | 48 | | | | | 43 | | | | | 38 | | 36 | | | | | 30 | | | | 26 | 25 | | | | | 20 | | | | 15 | | | | 11 | 10 | | 8 | | 6 | 5 | | 3 | 2 | | 8-2035383-6 | 8U5T-14A464-BA-100 |
| | | | | | | | 64 | 63 | | | | | | 57 | | 55 | | | | 51 | | 49 | 48 | | | | | 43 | | | | 39 | | | 36 | | | | | 30 | | | 27 | 26 | 25 | | | 22 | | | | | | 15 | | | | 11 | 10 | 9 | 8 | | 6 | | 4 | | 2 | 1 | 8-2035383-5 | 8U5T-14A464-BA-099 |
| | | | | | | | 64 | | | | | | | 57 | | 55 | 54 | | | 51 | | 49 | 48 | | | | | | | 41 | | | | | 36 | 35 | 34 | 33 | | 30 | | | | 26 | 25 | 24 | 23 | | | | 18 | 17 | | 15 | | | | | | 9 | | | | | 4 | 3 | | 1 | 8-2035383-4 | 8U5T-14A464-BA-098 |
| | | | | | | | | | | | | | | | | 55 | 54 | | | 51 | | 49 | | | | | | | | 41 | | | | | 36 | 35 | 34 | 33 | | 31 | 30 | | | | 26 | 25 | 24 | 23 | | | | 18 | 17 | | 15 | | | | | | 9 | | | | | 4 | 3 | | 1 | 8-2035383-2 | 8U5T-14A464-BA-097 |
| | | | | | | | | | | | | | | | | 55 | 54 | | 52 | 51 | | 49 | | | | | | | | 41 | | | | | 36 | 35 | 34 | 33 | | 31 | 30 | | | | 26 | 25 | 24 | 23 | | | | 18 | 17 | | 15 | | | | | | 9 | | | | | 4 | 3 | | 1 | 8-2035383-1 | 8U5T-14A464-BA-096 |
| | | | | | | | 64 | 63 | | | | | | 57 | | 55 | | | | 51 | | 49 | 48 | | | | | 43 | | | | 39 | | | 36 | | | | | 30 | | | 27 | 26 | 25 | | | 22 | | | | | | 15 | | | | 11 | 10 | 9 | 8 | | 6 | 5 | 4 | | 2 | 1 | 8-2035383-0 | 8U5T-14A464-BA-095 |
| | | | | | | | 64 | 63 | | | | | | 57 | | 55 | | | | 51 | | 49 | 48 | | | | | 43 | | | | 39 | | | 36 | | | | | 30 | | | 27 | 26 | 25 | 24 | 23 | 22 | | | | | | 15 | | | | 11 | 10 | 9 | 8 | | 6 | | 4 | | 2 | 1 | 7-2035383-9 | 8U5T-14A464-BA-094 |
| | | | | | | | | | | | | | | 57 | | 55 | 54 | | | | | 49 | | | | | | 43 | | 41 | | 39 | | | | 35 | | 33 | | 30 | | | 27 | 26 | | 24 | 23 | 22 | | | | | | 15 | | | | 11 | 10 | 9 | 8 | | 6 | 5 | 4 | 3 | | 1 | 7-2035383-8 | 8U5T-14A464-BA-093 |
| | | | | | | | | | | | | | | 57 | | 55 | 54 | | | | | 49 | | | | | | 43 | | 41 | | 39 | | | | 35 | | 33 | | 30 | | | 27 | 26 | | 24 | 23 | 22 | | | | 17 | | 15 | | | | 11 | 10 | 9 | | | 6 | 5 | 4 | 3 | | 1 | 7-2035383-6 | 8U5T-14A464-BA-092 |
| | | | | | | | 64 | 63 | | | | | | 57 | | 55 | 54 | | | 51 | | 49 | 48 | | | | | | | 41 | | | | | 36 | | 34 | 33 | | 30 | | | 27 | 26 | 25 | | | | | | 18 | | | 15 | | | | | | 9 | | | | | 4 | 3 | | 1 | 7-2035383-5 | 8U5T-14A464-BA-091 |
| | | | | | | | 64 | 63 | | | | | | 57 | | 55 | 54 | | | 51 | | 49 | 48 | | | | | | | 41 | | | | | 36 | | 34 | 33 | | 30 | | | 27 | 26 | 25 | 24 | 23 | | | | 18 | | | 15 | | | | | | 9 | | | | | 4 | 3 | | 1 | 7-2035383-4 | 8U5T-14A464-BA-090 |
| | | | | | | | 64 | 63 | | | | | | 57 | | | | | | 51 | | 49 | 48 | | | | | 43 | | | | 39 | | | 36 | | | | | 30 | | | 27 | 26 | 25 | | | 22 | | | | | | 15 | | | | 11 | 10 | | 8 | | 6 | 5 | 4 | | 2 | | 7-2035383-3 | 8U5T-14A464-BA-089 |
| | | | | | | | 64 | 63 | | | | | | 57 | | | 54 | | | 51 | | 49 | 48 | | | | | 43 | | | | 39 | | | 36 | | | | | 30 | | | 27 | 26 | 25 | | | 22 | | | | | | 15 | | | | 11 | 10 | | 8 | | 6 | 5 | 4 | 3 | 2 | | 7-2035383-2 | 8U5T-14A464-BA-088 |
| | | | | | | | 64 | 63 | | | | | | 57 | | | 54 | | | 51 | | 49 | 48 | | | | | 43 | | | | | | | 36 | | | | | 30 | | | | 26 | 25 | | | 22 | | | | | | 15 | | | | 11 | 10 | | 8 | | 6 | 5 | | 3 | 2 | | 7-2035383-1 | 8U5T-14A464-BA-087 |
| | | | | | | | 64 | 63 | | | | | | 57 | | 55 | 54 | | | 51 | | 49 | 48 | | | | | 43 | | | | 39 | | | 36 | | | | | 30 | | | 27 | 26 | 25 | | | 22 | | | | | | 15 | | | | 11 | 10 | 9 | 8 | | 6 | 5 | 4 | 3 | 2 | | 7-2035383-0 | 8U5T-14A464-BA-086 |
| | | | | | | | 64 | 63 | | | | | | 57 | | 55 | 54 | | | 51 | | 49 | 48 | | | | | | | 41 | | | | | 36 | | | 33 | | 30 | | | 27 | 26 | | 24 | 23 | | | | 18 | | | 15 | | | | | | 9 | | | | | 4 | | | | 6-2035383-9 | 8U5T-14A464-BA-085 |
| | | | | | | | | | | | | | | 57 | | 55 | 54 | | | 51 | | 49 | | | | | | 43 | | | | 39 | | | 36 | 35 | | 33 | | 30 | | | 27 | 26 | 25 | | | 22 | | | | 17 | | 15 | | | | 11 | 10 | 9 | 8 | | 6 | 5 | 4 | 3 | 2 | 1 | 6-2035383-8 | 8U5T-14A464-BA-084 |
| | | | | | | | | | | | | | | 57 | | 55 | 54 | | | 51 | | 49 | | | | | | 43 | | 41 | | 39 | | | 36 | 35 | | 33 | | 30 | | | 27 | 26 | 25 | | | 22 | | | | 17 | | 15 | | | | 11 | 10 | 9 | 8 | | 6 | 5 | 4 | 3 | | 1 | 6-2035383-7 | 8U5T-14A464-BA-083 |
| | | | | | | | 64 | 63 | | | | | | 57 | | | 54 | 53 | | 51 | | 49 | 48 | | | | | 43 | | | | 39 | | | 36 | | | 33 | | 30 | | | 27 | 26 | 25 | | | 22 | | | 18 | | | 15 | 14 | | 11 | 10 | 9 | 8 | | 6 | 5 | 4 | 3 | 2 | 1 | 6-2035383-6 | 8U5T-14A464-BA-082 |
| | | | | | | | 64 | | | | | | | 57 | | 55 | 54 | | | 51 | | 49 | 48 | | | | | 43 | | 41 | | 39 | | | 36 | 35 | 34 | 33 | | 30 | | | | 26 | 25 | 24 | 23 | 22 | | | 18 | 17 | | 15 | | | | 11 | 10 | 9 | 8 | | 6 | 5 | 4 | 3 | | 1 | 6-2035383-4 | 8U5T-14A464-BA-081 |
| | | | | | | | 64 | 63 | | | | | | 57 | | | | | | 51 | | 49 | 48 | | | | | 43 | | | | 39 | | | 36 | | | | | 30 | | | 27 | 26 | 25 | | | 22 | | | | | | 15 | | | | 11 | 10 | 9 | 8 | | 6 | 5 | 4 | | 2 | | 6-2035383-3 | 8U5T-14A464-BA-080 |
| | | | | | | | 64 | 63 | | | | | | 57 | | 55 | | | | 51 | | 49 | 48 | | | | | 43 | | | | 39 | | | 36 | | | | | 30 | | | 27 | 26 | 25 | 24 | 23 | 22 | | | | | | 15 | | | | 11 | 10 | 9 | 8 | | 6 | | 4 | | 2 | | 6-2035383-2 | 8U5T-14A464-BA-079 |
| | | | | | | | 64 | 63 | | | | | | 57 | | | 54 | | | 51 | | 49 | 48 | | | | | 43 | | | | 39 | | | 36 | | | | | 30 | | | 27 | 26 | 25 | 24 | 23 | 22 | | | | | | 15 | | | | 11 | 10 | 9 | 8 | | 6 | 5 | 4 | 3 | 2 | | 6-2035383-1 | 8U5T-14A464-BA-078 |
| | | | | | | | 64 | | | | | | | 57 | | 55 | 54 | | | 51 | | 49 | 48 | | | | | 43 | | 41 | | 39 | | | 36 | | 34 | 33 | | 30 | | | | 26 | 25 | 24 | 23 | 22 | | | 18 | 17 | | 15 | | | | 11 | 10 | 9 | 8 | | 6 | 5 | 4 | 3 | | 1 | 5-2035383-9 | 8U5T-14A464-BA-077 |
| | | | | | | | 64 | 63 | | | | | | 57 | | 55 | | | | 51 | | 49 | 48 | | | | | 43 | | | | 39 | | | 36 | | | | | 30 | | | 27 | 26 | 25 | 24 | 23 | 22 | | | | | | 15 | | | | 11 | 10 | 9 | 8 | | 6 | 5 | 4 | | 2 | | 5-2035383-7 | 8U5T-14A464-BA-076 |
| | | | | | | | 64 | 63 | | | | | | 57 | | 55 | | | | 51 | | 49 | 48 | | | | | 43 | | | | 39 | | | 36 | | | | | 30 | | | 27 | 26 | 25 | | | 22 | | | | | | 15 | | | | 11 | 10 | 9 | 8 | | 6 | 5 | 4 | | 2 | | 5-2035383-6 | 8U5T-14A464-BA-075 |
| | | | | | | | | | | | | | | | 56 | 55 | 54 | | | 51 | | 49 | | | | | | | | | | 39 | | | 36 | 35 | | 33 | | | | | 27 | 26 | 25 | 24 | 23 | | | | | 17 | | 15 | | | 12 | 11 | 10 | 9 | 8 | | 6 | 5 | 4 | 3 | | 1 | 5-2035383-5 | 8U5T-14A464-BA-074 |
| | | | | | | | 64 | | | | | | | 57 | 56 | | 54 | | | 51 | | 49 | 48 | | | | | | | | | 39 | | | 36 | 35 | | 33 | | 30 | | | 27 | 26 | 25 | 24 | 23 | 22 | | | | 17 | | 15 | | | 12 | 11 | 10 | 9 | 8 | | 6 | 5 | 4 | 3 | | 1 | 5-2035383-4 | 8U5T-14A464-BA-073 |
| | | | | | | | | 63 | | | | | | 57 | | 55 | 54 | | | 51 | | | | | | | | 43 | | | | 39 | | | 36 | 35 | 34 | 33 | | | | | 27 | 26 | 25 | 24 | 23 | 22 | | | 18 | 17 | | 15 | | | | 11 | 10 | 9 | 8 | | 6 | | 4 | 3 | 2 | 1 | 5-2035383-1 | 8U5T-14A464-BA-072 |
| | | | | | | | 64 | 63 | | | | | | 57 | | 55 | | | | 51 | | 49 | 48 | | | | | 43 | | | | 39 | | | 36 | | | | | 30 | | | 27 | 26 | 25 | | | 22 | | | 18 | 17 | | 15 | | | | 11 | 10 | 9 | 8 | | 6 | 5 | 4 | | 2 | 1 | 5-2035383-0 | 8U5T-14A464-BA-071 |
| | | | | | | | 64 | 63 | | | | | | 57 | | 55 | 54 | | | 51 | | 49 | 48 | | | | | 43 | | 41 | | 39 | | | 36 | | | 33 | | 30 | | | 27 | 26 | 25 | | | 22 | | | | | | 15 | | | | 11 | 10 | 9 | 8 | | 6 | 5 | 4 | 3 | | 1 | 4-2035383-8 | 8U5T-14A464-BA-070 |
| | | | | | | | 64 | 63 | | | | | | 57 | | 55 | 54 | | | 51 | | 49 | 48 | | | | | 43 | | | | 39 | | | 36 | | | | | 30 | | | 27 | 26 | 25 | | | 22 | | | | | | 15 | | | | 11 | 10 | 9 | 8 | | 6 | 5 | 4 | 3 | 2 | 1 | 4-2035383-7 | 8U5T-14A464-BA-069 |
| | | | | | | | 64 | 63 | | | | | | 57 | | 55 | 54 | | | 51 | | 49 | 48 | | | | | 43 | | 41 | | 39 | | | 36 | | | | | 30 | | | 27 | 26 | 25 | | | 22 | | | | | | 15 | | | | 11 | 10 | 9 | 8 | | 6 | 5 | 4 | 3 | | 1 | 4-2035383-6 | 8U5T-14A464-BA-068 |
| | | | | | | | | 63 | | | | | | 57 | | 55 | 54 | | | 51 | | | | | | | | 43 | | | | 39 | | | 36 | 35 | | 33 | | | | | 27 | 26 | 25 | 24 | 23 | 22 | | | 18 | 17 | | 15 | | | | 11 | 10 | 9 | 8 | | 6 | 5 | 4 | 3 | 2 | 1 | 4-2035383-5 | 8U5T-14A464-BA-067 |
| | | | | | | | | 63 | | | | | | 57 | | 55 | 54 | | | 51 | | | | | | | | 43 | | | | 39 | | | 36 | 35 | | 33 | 32 | | | | 27 | 26 | 25 | 24 | 23 | 22 | | | 18 | 17 | | 15 | | | | 11 | 10 | 9 | 8 | | 6 | 5 | 4 | 3 | 2 | 1 | 4-2035383-2 | 8U5T-14A464-BA-066 |
| | | | | | | | 64 | 63 | | | | | | 57 | | 55 | 54 | | | 51 | | 49 | 48 | | | | | | | 41 | | | | | 36 | | | 33 | | 30 | | | 27 | 26 | 25 | | | | | | 18 | | | 15 | | | | | | 9 | | | | | 4 | | | | 4-2035383-1 | 8U5T-14A464-BA-065 |
| | | | | | | | 64 | 63 | | | | | | 57 | | 55 | | | | 51 | | | 48 | | | | | 43 | | | | 39 | | | 36 | | | | | 30 | | | 27 | 26 | 25 | | | 22 | | | 18 | 17 | | 15 | | | | 11 | 10 | 9 | 8 | | 6 | 5 | 4 | | 2 | 1 | 4-2035383-0 | 8U5T-14A464-BA-064 |
| | | | | | | | | | | | | | | 57 | | 55 | 54 | | | 51 | | 49 | | | | | | 43 | | 41 | | 39 | | | 36 | 35 | | 33 | | 30 | | | 27 | 26 | 25 | 24 | 23 | 22 | | | | 17 | | 15 | | | | 11 | 10 | 9 | 8 | | 6 | 5 | 4 | 3 | | 1 | 3-2035383-8 | 8U5T-14A464-BA-063 |
| | | | | | | | | | | | | | | 57 | | 55 | 54 | | | | | 49 | | | | | | 43 | | 41 | | 39 | | | | 35 | | 33 | | 30 | | | 27 | 26 | | 24 | 23 | 22 | | | | 17 | | 15 | | | | 11 | 10 | 9 | 8 | | 6 | 5 | 4 | 3 | | 1 | 3-2035383-7 | 8U5T-14A464-BA-062 |
| | | | | | | | | | | | | | | 57 | | 55 | 54 | | | 51 | | 49 | | | | | | 43 | | 41 | | 39 | | | 36 | 35 | | 33 | | 30 | | | 27 | 26 | 25 | 24 | 23 | | | | | 17 | | 15 | | | | | 10 | 9 | 8 | | 6 | 5 | 4 | 3 | | 1 | 3-2035383-5 | 8U5T-14A464-BA-061 |
| CAVITIES WITH A NUMERIC SYMBOL INDICATES CLOSED TERMINAL LOCATIONS | | | | | | | | | | | | | | 57 | | 55 | | | | 51 | | 49 | | | | | | 43 | | | | | | | 36 | 35 | | 33 | | 30 | | | 27 | | 25 | | | 22 | | | 18 | 17 | | 15 | | | | 11 | 10 | 9 | 8 | | 6 | | | 3 | 2 | 1 | 3-2035383-4 | 8U5T-14A464-BA-060 |
| | | | | | | | 64 | 63 | | | | | | 57 | | 55 | 54 | | | 51 | | 49 | 48 | | | | | | | 41 | | | | | 36 | | | 33 | | 30 | | | 27 | 26 | 25 | 24 | 23 | | | | 18 | | | 15 | | | | | | 9 | | | | | 4 | | | | 3-2035383-3 | 8U5T-14A464-BA-059 |
| BLANK CAVITIES INDICATES OPEN TERMINAL HOLE LOCATIONS | | | | | | | | 63 | | | | | | 57 | | 55 | | | | 51 | | 49 | | | | | | 43 | | | | 39 | | | 36 | 35 | | 33 | | 30 | | | 27 | 26 | 25 | | | 22 | | | 18 | 17 | | 15 | | | | 11 | 10 | 9 | 8 | | 6 | 5 | 4 | | 2 | 1 | 3-2035383-2 | 8U5T-14A464-BA-058 |
| | | | | | | | | 63 | | | | | | 57 | | 55 | | | | 51 | | 49 | | | | | | 43 | | | | 39 | | | 36 | 35 | | 33 | | 30 | | | 27 | 26 | 25 | 24 | 23 | 22 | | | 18 | 17 | | 15 | | | | 11 | 10 | 9 | 8 | | 6 | 5 | 4 | | 2 | 1 | 3-2035383-1 | 8U5T-14A464-BA-057 |

8U5T-14A464-B* PIN-OUT CHART

THIS DRAWING IS A CONTROLLED DOCUMENT.

DIMENSIONS: mm

TOLERANCES UNLESS OTHERWISE SPECIFIED:
0 PLC ±-
1 PLC ±0.3
2 PLC ±0.10
3 PLC ±-
4 PLC ±-
ANGLES ±1°

MATERIAL - -
FINISH - -

DWN R. VESTAL 15APR2005
CHK T. VALASEK 15APR2005
APVD T. VALASEK 15APR2005
PRODUCT SPEC -
APPLICATION SPEC -
WEIGHT -

TE Connectivity

NAME 70-WAY HARNESS ASSEMBLY

| SIZE | CAGE CODE | DRAWING NO | RESTRICTED TO |
|---|---|---|---|
| A1 | 00779 | C-1438136 | - |

CUSTOMER DRAWING | SCALE 2:1 | SHEET 8 OF 11 | REV G47

4805 (3/13)

THIS DRAWING IS UNPUBLISHED. RELEASED FOR PUBLICATION 20
© COPYRIGHT 20 BY - ALL RIGHTS RESERVED.

| REVISIONS | | | | | |
|---|---|---|---|---|---|
| P | LTR | DESCRIPTION | DATE | DWN | APVD |
| | - | SEE SHEET 1 | - | - | - |

## KEYING OPTION F

| TERMINAL HOLE POSITION | 70 | 69 | 68 | 67 | 66 | 65 | 64 | 63 | 62 | 61 | 60 | 59 | 58 | 57 | 56 | 55 | 54 | 53 | 52 | 51 | 50 | 49 | 48 | 47 | 46 | 45 | 44 | 43 | 42 | 41 | 40 | 39 | 38 | 37 | 36 | 35 | 34 | 33 | 32 | 31 | 30 | 29 | 28 | 27 | 26 | 25 | 24 | 23 | 22 | 21 | 20 | 19 | 18 | 17 | 16 | 15 | 14 | 13 | 12 | 11 | 10 | 9 | 8 | 7 | 6 | 5 | 4 | 3 | 2 | 1 | ASSEMBLY PART NUMBER | FORD PART NUMBER |
|---|---|---|---|---|---|---|---|---|---|---|---|---|---|---|---|---|---|---|---|---|---|---|---|---|---|---|---|---|---|---|---|---|---|---|---|---|---|---|---|---|---|---|---|---|---|---|---|---|---|---|---|---|---|---|---|---|---|---|---|---|---|---|---|---|---|---|---|---|---|---|---|---|
| CAVITIES WITH A NUMERIC SYMBOL INDICATES CLOSED TERMINAL LOCATIONS | | | | | | | | | | | | | | | | | | 53 | 52 | | | | | | | | | | | | | | | 37 | 36 | | | | | | | | | | | | | | | | | | | 17 | | 15 | | | | | | | 8 | 7 | | | | | | | 3-2035383-6 | AU5T-14A464-CA-003 |
| | | | | | | | | | | | 60 | 59 | 58 | 57 | | | | 53 | 52 | | | | | | | | 44 | | | | | | | | 36 | | | | | | | | 28 | | | | 24 | | | | | | | | | | | | 13 | | 11 | | | 8 | 7 | | | | | | | 2-2035383-8 | AU5T-14A464-CA-002 |
| BLANK CAVITIES INDICATES OPEN TERMINAL HOLE LOCATIONS | | | | | | | | | | | | | | | | | | 53 | 52 | | | | | | | | | | | | | | | 37 | 36 | | | | | | | | | | | | | | | | | | | 17 | | 15 | | | | | | | | | | | | | | | 9-1456659-0 | AU5T-14A464-CA-001 |
| | | | | | | | | | | | | | | | | | | | | | | | | | | | | | | | | | | | | | | | | | | | | | | | | | | | | | | | | | | | | | | | | | | | | | | | 1438136-6 | AU5T-14A464-CA-000 |

AU5T-14A464-C* PIN-OUT CHART

## KEYING OPTION E

| TERMINAL HOLE POSITION | 70 | 69 | 68 | 67 | 66 | 65 | 64 | 63 | 62 | 61 | 60 | 59 | 58 | 57 | 56 | 55 | 54 | 53 | 52 | 51 | 50 | 49 | 48 | 47 | 46 | 45 | 44 | 43 | 42 | 41 | 40 | 39 | 38 | 37 | 36 | 35 | 34 | 33 | 32 | 31 | 30 | 29 | 28 | 27 | 26 | 25 | 24 | 23 | 22 | 21 | 20 | 19 | 18 | 17 | 16 | 15 | 14 | 13 | 12 | 11 | 10 | 9 | 8 | 7 | 6 | 5 | 4 | 3 | 2 | 1 | ASSEMBLY PART NUMBER | FORD PART NUMBER |
|---|---|---|---|---|---|---|---|---|---|---|---|---|---|---|---|---|---|---|---|---|---|---|---|---|---|---|---|---|---|---|---|---|---|---|---|---|---|---|---|---|---|---|---|---|---|---|---|---|---|---|---|---|---|---|---|---|---|---|---|---|---|---|---|---|---|---|---|---|---|---|---|---|
| | | | | | | | | | | 61 | 60 | 59 | 58 | 57 | 56 | | | | | | | | | | | | | 43 | 42 | 41 | 40 | | 38 | 37 | 36 | 35 | | | | 31 | | | 28 | 27 | 26 | 25 | | 23 | 22 | 21 | 20 | 19 | | 17 | | 15 | 14 | | | | | | | | | 5 | 4 | 3 | | 1 | 2138952-1 | AU5T-14A464-UA-013 |
| | | | | | | | | | | 61 | 60 | 59 | 58 | | | | | | | | | | | | | | | 43 | | | 40 | | 38 | 37 | | 35 | | | | 31 | | | 28 | 27 | 26 | 25 | | 23 | 22 | 21 | 20 | 19 | | 17 | | 15 | 14 | | | | | | | | | 5 | 4 | 3 | | 1 | 9-2035383-6 | AU5T-14A464-UA-012 |
| | | | | | | | | | | 61 | 60 | 59 | 58 | 57 | 56 | | | | | | | | 48 | 47 | | 45 | 44 | 43 | 42 | 41 | 40 | | 38 | 37 | 36 | 35 | | | | 31 | | | 28 | 27 | 26 | 25 | 24 | 23 | 22 | 21 | 20 | 19 | | | 16 | | 14 | | | | | | | 7 | 6 | 5 | 4 | | 2 | | 7-2035383-7 | AU5T-14A464-UA-011 |
| | | | | | | | | | | 61 | 60 | 59 | 58 | 57 | 56 | | | | | | | | | | | | | 43 | 42 | 41 | 40 | | 38 | 37 | 36 | 35 | | | | 31 | | | 28 | 27 | 26 | 25 | 24 | 23 | 22 | 21 | 20 | 19 | | 17 | | 15 | 14 | | | | | | | | | 5 | 4 | 3 | | 1 | 5-2035383-2 | AU5T-14A464-UA-010 |
| | | | | | | | | | | 61 | 60 | 59 | 58 | | | | | | | | | | | | | | | 43 | | | 40 | | 38 | 37 | | 35 | | | | 31 | | | 28 | 27 | 26 | | 24 | 23 | 22 | 21 | 20 | 19 | | 17 | | 15 | 14 | | | | | | | | | 5 | 4 | 3 | | 1 | 4-2035383-9 | AU5T-14A464-UA-009 |
| | | | | | | | | | | 61 | 60 | 59 | 58 | | | | | | | | | | | | | | | 43 | | | 40 | | 38 | 37 | | 35 | | | | 31 | | | 28 | 27 | | | | | 22 | 21 | | 19 | | 17 | | 15 | 14 | | | | | | | | | 5 | 4 | 3 | | 1 | 4-2035383-4 | AU5T-14A464-UA-008 |
| | | | | | | | | | | 61 | 60 | 59 | 58 | | | | | | | | | | | | | | | 43 | | | 40 | | 38 | 37 | | 35 | | | | 31 | | | 28 | 27 | 26 | | | 23 | 22 | 21 | 20 | 19 | | 17 | | 15 | 14 | | | | | | | | | 5 | | 3 | | 1 | 2-2035383-6 | AU5T-14A464-UA-007 |
| | | | | | | | | | | 61 | 60 | 59 | 58 | | | | | | | | | | | | | | | 43 | | | 40 | | 38 | 37 | | 35 | | | | 31 | | | 28 | 27 | 26 | | | 23 | 22 | 21 | 20 | 19 | | 17 | | 15 | 14 | | | | | | | | | 5 | 4 | 3 | | 1 | 2-2035383-2 | AU5T-14A464-UA-006 |
| | | | | | | | | | | 61 | 60 | 59 | 58 | 57 | 56 | | | | | | | | 48 | 47 | | | | 43 | 42 | 41 | | | 38 | 37 | 36 | | | | | | | | 28 | 27 | | 25 | | | 22 | | | 19 | | 17 | 16 | 15 | 14 | | | | | | | | | 5 | | 3 | 2 | 1 | 1-2035383-6 | AU5T-14A464-UA-005 |
| | | | | | | | | | | 61 | 60 | 59 | 58 | 57 | 56 | | | | | | | | 48 | 47 | 46 | | | 43 | 42 | 41 | 40 | | | | | 35 | | | | 31 | | 29 | 28 | 27 | 26 | 25 | | 23 | 22 | 21 | 20 | 19 | | 17 | | 15 | 14 | | | | | | | | | 5 | 4 | 3 | | 1 | 9-1456659-7 | AU5T-14A464-UA-004 |
| CAVITIES WITH A NUMERIC SYMBOL INDICATES CLOSED TERMINAL LOCATIONS | | | | | | | | | | | | 59 | 58 | | | | | | | | | | 48 | 47 | 46 | | | 43 | 42 | 41 | | | | | | 35 | | | | 31 | | 29 | 28 | 27 | 26 | 25 | 24 | 23 | | 21 | | 19 | | 17 | | 15 | 14 | | | | | | | | | 5 | 4 | 3 | | 1 | 9-1456659-5 | AU5T-14A464-UA-003 |
| | | | | | | | | | | | | 59 | 58 | | | | | | | | | | 48 | 47 | 46 | | | 43 | 42 | 41 | | | | | | 35 | | | | 31 | | 29 | 28 | 27 | 26 | | 24 | 23 | | 21 | | 19 | | 17 | | 15 | 14 | | | | | | | | | 5 | 4 | 3 | | 1 | 9-1456659-4 | AU5T-14A464-UA-002 |
| BLANK CAVITIES INDICATES OPEN TERMINAL HOLE LOCATIONS | | | | | | | | | | 61 | 60 | 59 | 58 | 57 | 56 | | | | | | | | 48 | 47 | | | | 43 | 42 | 41 | 40 | | 38 | 37 | 36 | 35 | | | | 31 | | | 28 | 27 | 26 | 25 | | 23 | 22 | 21 | 20 | 19 | | | 16 | | | | | | | | | | | 5 | 4 | | 2 | | 9-1456659-2 | AU5T-14A464-UA-001 |
| | | | | | | | | | | | | | | | | | | | | | | | | | | | | | | | | | | | | | | | | | | | | | | | | | | | | | | | | | | | | | | | | | | | | | | | 1438136-5 | AU5T-14A464-UA-000 |

AU5T-14A464-U* PIN-OUT CHART

THIS DRAWING IS A CONTROLLED DOCUMENT.

| | |
|---|---|
| DWN | R. VESTAL 15APR2005 |
| CHK | T. VALASEK 15APR2005 |
| APVD | T. VALASEK 15APR2005 |
| PRODUCT SPEC | - |
| APPLICATION SPEC | - |
| WEIGHT | - |
| DIMENSIONS: | mm |
| TOLERANCES UNLESS OTHERWISE SPECIFIED: | 0 PLC ±- ; 1 PLC ±0.3 ; 2 PLC ±0.10 ; 3 PLC ±- ; 4 PLC ±- ; ANGLES ±1° |
| MATERIAL | - - |
| FINISH | - - |

TE Connectivity

NAME: 70-WAY HARNESS ASSEMBLY

| SIZE | CAGE CODE | DRAWING NO | RESTRICTED TO |
|---|---|---|---|
| A1 | 00779 | C-1438136 | - |

CUSTOMER DRAWING — SCALE 2:1 — SHEET 9 OF 11 — REV G47

4805 (3/13)

THIS DRAWING IS UNPUBLISHED. RELEASED FOR PUBLICATION 20
© COPYRIGHT 20 BY - ALL RIGHTS RESERVED.

REVISIONS

| P | LTR | DESCRIPTION | DATE | DWN | APVD |
|---|---|---|---|---|---|
| | - | SEE SHEET 1 | - | - | - |

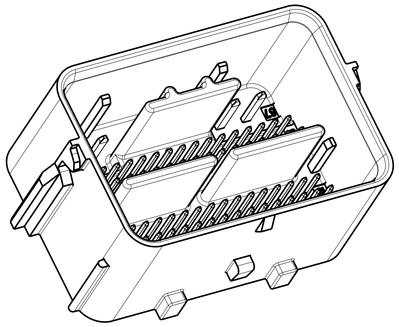

SCALE 2:1

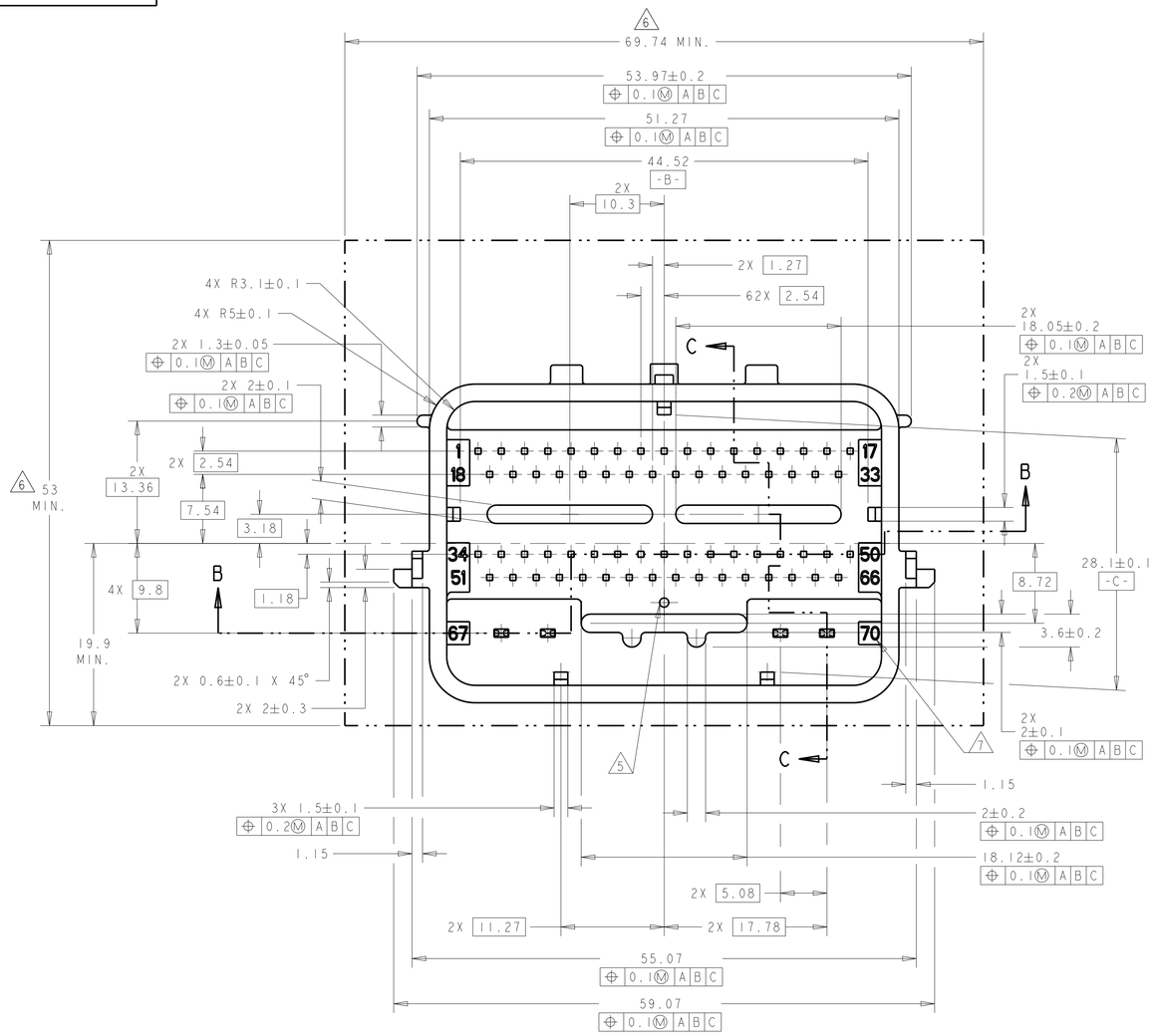


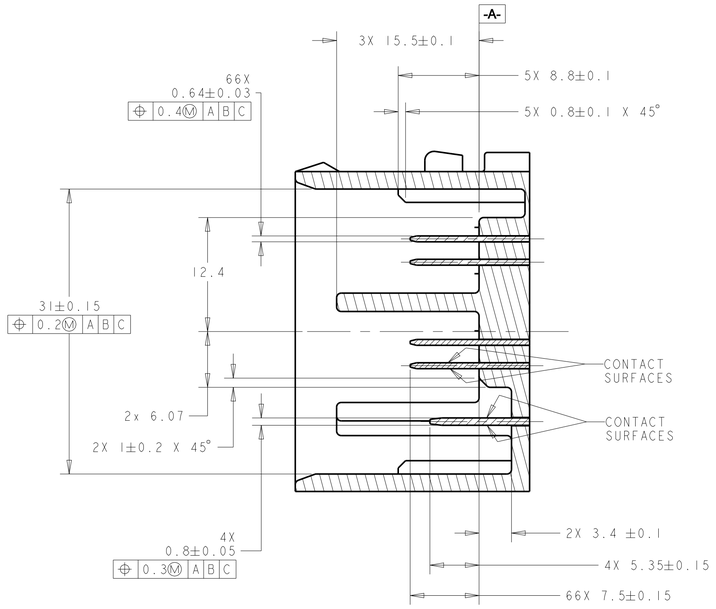


SECTION C-C

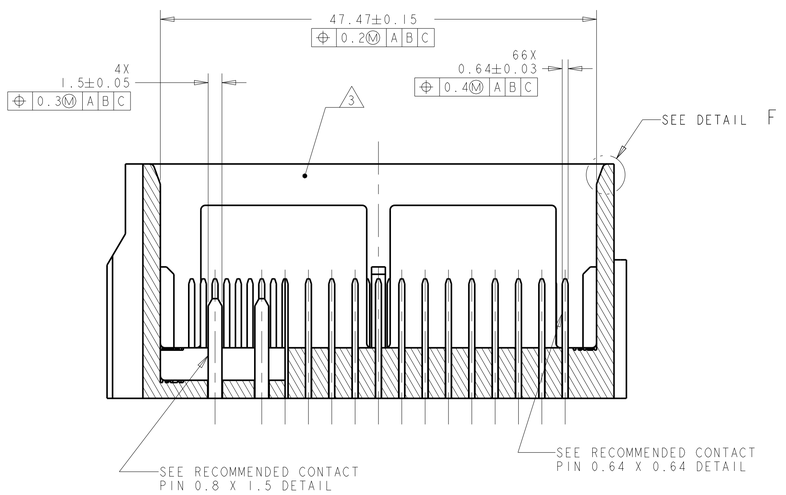


SECTION B-B

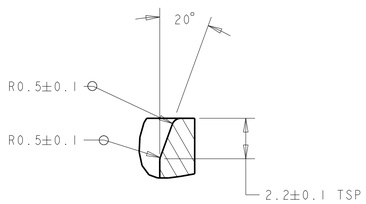


DETAIL F
SCALE 6:1

NOTES: UNLESS OTHERWISE SPECIFIED

1. GENERAL TOLERANCE:
   ±0.3 ALL ONE PLACE DIMENSIONS
   ±0.10 ALL TWO PLACE DIMENSIONS
   ±1°00′ ALL ANGULAR DIMENSIONS
2. DRAFT ANGLE PERMISSIBLE ONLY WITHIN DRAWING TOLERANCE.

3. SEALING SURFACE, NO WITNESS LINES OF DAMAGE PERMITTED.

4. ALL UNMARKED RADII TO BE 0.5 MAX., UNLESS OTHERWISE SPECIFIED

5. VENT HOLE SIZE AND LOCATION IS OPTIONAL.

6. THIS AREA TO REMAIN CLEAR FOR THE HARNESS ASSEMBLY.

7. TERMINAL POSITION INDENTIFICATION.

8. MATES WITH TYCO ELECTRONICS PART# 1438136-*

THIS DRAWING IS A CONTROLLED DOCUMENT.

DIMENSIONS: mm

TOLERANCES UNLESS OTHERWISE SPECIFIED:
0 PLC ±-
1 PLC ±0.3
2 PLC ±0.10
3 PLC ±-
4 PLC ±-
ANGLES ±1°

MATERIAL - -
FINISH - -

DWN R. VESTAL 15APR2005
CHK T. VALASEK 15APR2005
APVD T. VALASEK 15APR2005
PRODUCT SPEC -
APPLICATION SPEC -
WEIGHT -

TE Connectivity

NAME 70-WAY HARNESS ASSEMBLY

| SIZE | CAGE CODE | DRAWING NO | RESTRICTED TO |
|---|---|---|---|
| A1 | 00779 | C-1438136 | - |

CUSTOMER DRAWING

| SCALE | SHEET | OF | REV |
|---|---|---|---|
| 2:1 | 10 | 11 | G47 |

THIS DRAWING IS UNPUBLISHED. RELEASED FOR PUBLICATION 20
© COPYRIGHT 20 BY - ALL RIGHTS RESERVED.

# HEADER INTERFACE KEYING OPTIONS

REVISIONS

| P | LTR | DESCRIPTION | DATE | DWN | APVD |
|---|---|---|---|---|---|
| | - | SEE SHEET 1 | - | - | - |

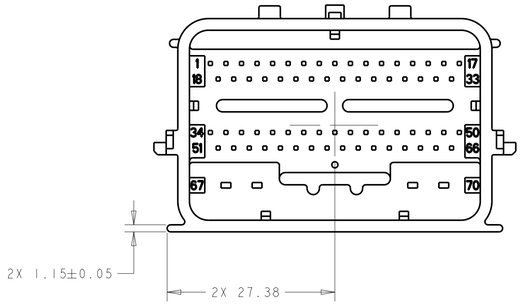


KEYING OPTION "A"
SCALE 2:1

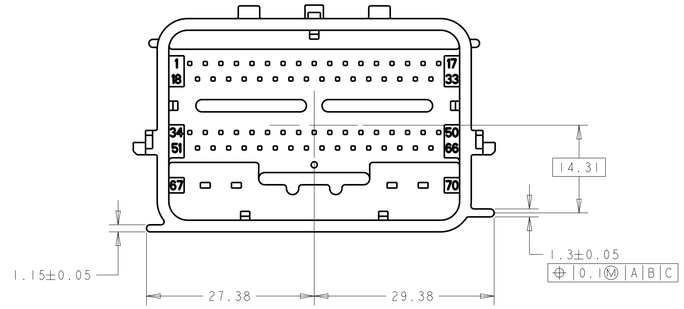


KEYING OPTION "B"
SCALE 2:1

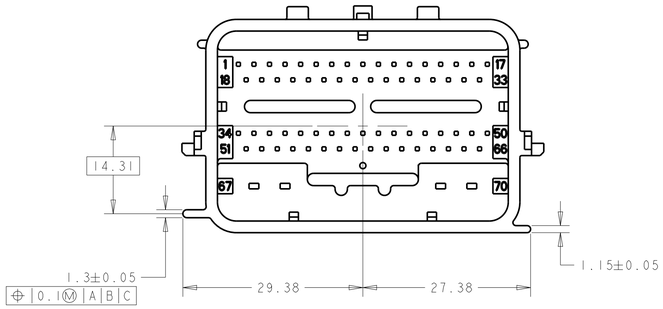


KEYING OPTION "D"
SCALE 2:1

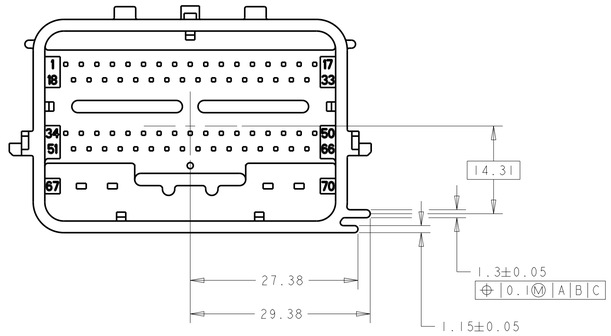


KEYING OPTION" E"
SCALE 2:1

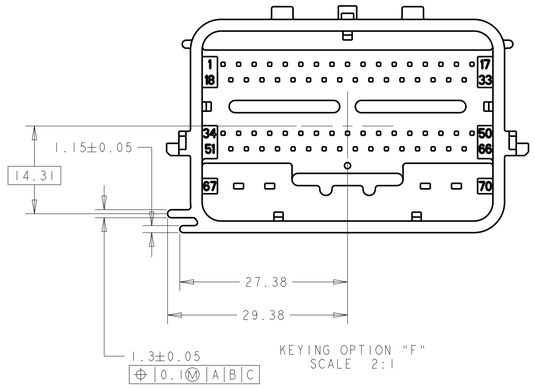


KEYING OPTION "F"
SCALE 2:1

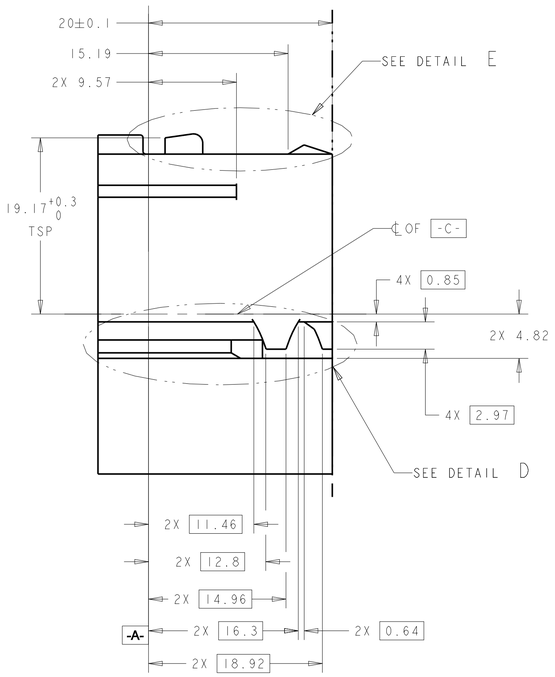


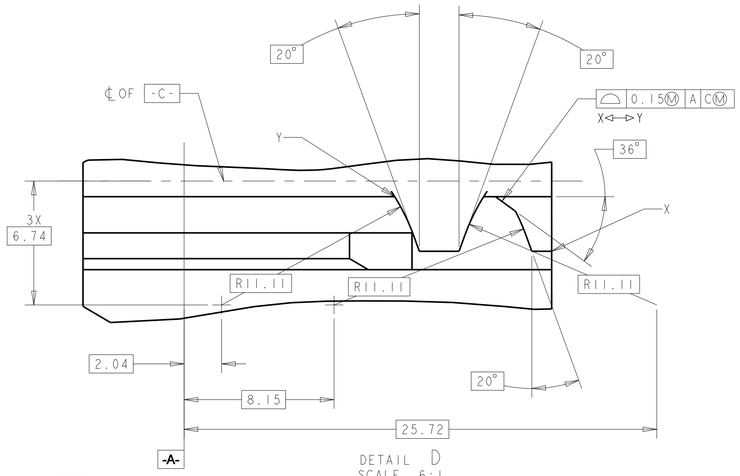


DETAIL D
SCALE 6:1
TYP. 2 PLCS.

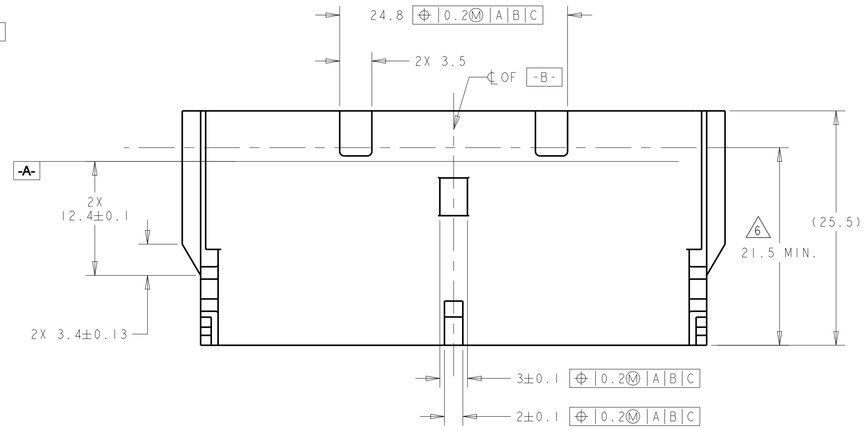


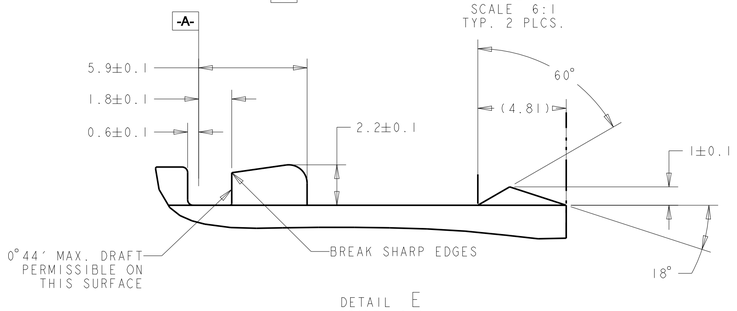


DETAIL E
SCALE 6:1

THIS DRAWING IS A CONTROLLED DOCUMENT.

DIMENSIONS: mm

TOLERANCES UNLESS OTHERWISE SPECIFIED:
0 PLC ±-
1 PLC ±0.3
2 PLC ±0.10
3 PLC ±-
4 PLC ±-
ANGLES ±1°

MATERIAL -
FINISH -

DWN R. VESTAL 15APR2005
CHK T. VALASEK 15APR2005
APVD T. VALASEK 15APR2005
PRODUCT SPEC -
APPLICATION SPEC -
WEIGHT -

TE Connectivity

NAME 70-WAY HARNESS ASSEMBLY

SIZE A1 | CAGE CODE 00779 | DRAWING NO C-1438136 | RESTRICTED TO -

CUSTOMER DRAWING | SCALE 2:1 | SHEET 11 OF 11 | REV 647

4805 (3/13)

Компания «ЭлектроПласт» предлагает заключение долгосрочных отношений при поставках импортных электронных компонентов на взаимовыгодных условиях!

Наши преимущества:

- Оперативные поставки широкого спектра электронных компонентов отечественного и импортного производства напрямую от производителей и с крупнейших мировых складов;
- Поставка более 17-ти миллионов наименований электронных компонентов;
- Поставка сложных, дефицитных, либо снятых с производства позиций;
- Оперативные сроки поставки под заказ (от 5 рабочих дней);
- Экспресс доставка в любую точку России;
- Техническая поддержка проекта, помощь в подборе аналогов, поставка прототипов;
- Система менеджмента качества сертифицирована по Международному стандарту ISO 9001;
- Лицензия ФСБ на осуществление работ с использованием сведений, составляющих государственную тайну;
- Поставка специализированных компонентов (Xilinx, Altera, Analog Devices, Intersil, Interpoint, Microsemi, Aeroflex, Peregrine, Syfer, Eurofarad, Texas Instrument, Miteq, Cobham, E2V, MA-COM, Hittite, Mini-Circuits,General Dynamics и др.);

Помимо этого, одним из направлений компании «ЭлектроПласт» является направление «Источники питания». Мы предлагаем Вам помощь Конструкторского отдела:

- Подбор оптимального решения, техническое обоснование при выборе компонента;
- Подбор аналогов;
- Консультации по применению компонента;
- Поставка образцов и прототипов;
- Техническая поддержка проекта;
- Защита от снятия компонента с производства.

**Как с нами связаться**

**Телефон:** 8 (812) 309 58 32 (многоканальный)
**Факс:** 8 (812) 320-02-42
**Электронная почта:** org@eplast1.ru
**Адрес:** 198099, г. Санкт-Петербург, ул. Калинина, дом 2, корпус 4, литера А.