The product information in this catalog is for reference only. Please request the Engineering Drawing for the most current and accurate design information.
All non-RoHS products have been discontinued, or will be discontinued soon. Please check the products status on the Hirose website RoHS search at www.hirose-connectors.com, or contact your Hirose sales representative.

3100 SERIES LOW PROFILE CONNECTOR FOR PREVENTING EMI

General

The 3100 series low profile I/O connectors for preventing EMI are perfect for today's compact electronic equipment.

Available in 6, 8, 12, 14 and 16 pins.

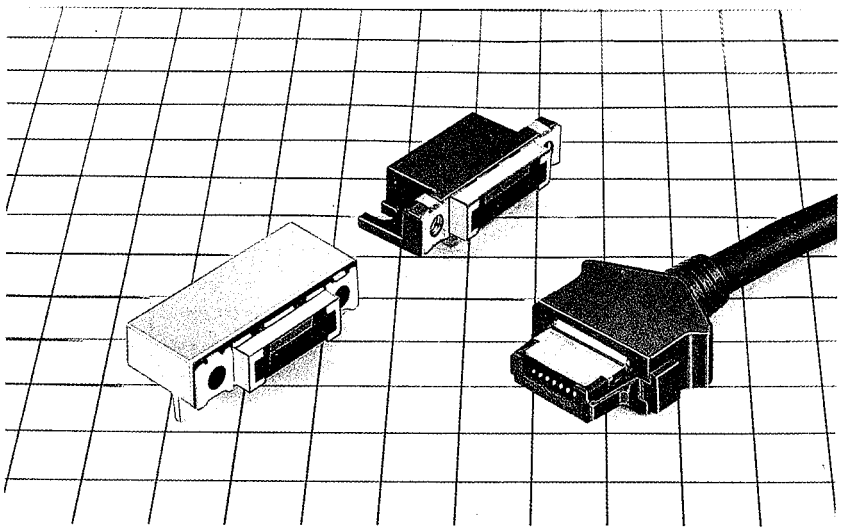

Features

(1) The metal shell guide structure for the receptacle connector reduces drastically the height for the substrate to 7mm.
(2) The metal shell with a molded cover case is designed to shield it from electrostatic discharge (ESD).
(3) The cantilever profile of the female contact ensures effortless coupling and long service life.
(4) The effective engagement length is of sequence structure and sufficient to allow the shielded part to engage first when connecting.
(5) The cable can be terminated efficiently just by crimping with a jig after passing the cable through the guide plate hole.
(6) Cables AWG 26 to AGW 30 are applicable by partially changing the guide plate since the male cnnoector adopts a U-slit type connection.
(7) The side latching method of the molded cover assures easy locking of the plug connector.

Application

Office Automation, Communications, Home Automation and Other equipment.

The product information in this catalog is for reference only. Please request the Engineering Drawing for the most current and accurate design information.
All non-RoHS products have been discontinued, or will be discontinued soon. Please check the products status on the Hirose website RoHS search at www.hirose-connectors.com, or contact your Hirose sales representative.

Specification

Specification	
Current capacity	0.5A
Rated Voltage	AC 125V
Insulation Resistance	Min. 250MΩ at DC 100V
Contact Resistance	Max. 35mΩ at DC 1mA
Withstanding Voltage	AC 300Vr.m.s for 1 minute

Relation between guide plate and applicable coating O.D.			
Hole dia (mm) of Wire Configuration Guide Plate	ϕ0.65	ϕ0.85	ϕ1
Applicable Cable Cut dia (mm)	ϕ0.57~ϕ0.63	ϕ0.75~ϕ0.83	ϕ0.88~ϕ0.98

Material & Finish

Material Finish			
Receptacle	Insulation	PBT resin	Black UL94V-0
	Contact	Brass	Selective gold plating
	Shell	Brass	Solder plating
Plug	Insulation	Polycarbonate Resin	White for AWG #28
			Black for AWG #30
	Contact	Brass	Selective gold plating
	Guide Plate	Polycarbonate resin	Transparent
	Shell	Brass	Solder plating
	Cover	Polycarbonate resin	

The product information in this catalog is for reference only. Please request the Engineering Drawing for the most current and accurate design information.
All non-RoHS products have been discontinued, or will be discontinued soon. Please check the products status on the Hirose website RoHS search at www.hirose-connectors.com, or contact your Hirose sales representative.

Ordering Information

● Receptacle

3 1 1 0 — 6 S A

(1) (2) (3)(4)(5)

(1) Series Number: 31
(2) Type
10: Right Angle Dip
(3) No. of Pins: 6, 8, 12, 14, 16
(4) Type of opening
S: Receptacle
(5) Additional Function
Blank: Standard
A: All Shield Type

● Plug

3 1 3 0 A — 6 P A — C

(1) (2) (3) (4)(5)(6) (7)

(1) Series Number: 31
(2) Type
30: AWG28, 26 IDC
31: AWG30, IDC
(3) Hole dia. of Wire Configuration Tube Plate
Black: ϕ 1.0 (ϕ 0.88～ϕ 0.98)
A: ϕ 0.85(ϕ 0.75～ϕ 0.83)
B: ϕ 0.65(ϕ 0.57～ϕ 0.63)
(4) No. of Pins: 6, 8, 12, 14, 16
(5) Type of opening
P: Plug
(6) Cover Type
Blank: Straight Cable Exit
A: Side Cable Exit
(7) Cover
C: Standard

The product information in this catalog is for reference only. Please request the Engineering Drawing for the most current and accurate design information.
All non-RoHS products have been discontinued, or will be discontinued soon. Please check the products status on the Hirose website RoHS search at www.hirose-connectors.com, or contact your Hirose sales representative.

Receptacle (Standard)

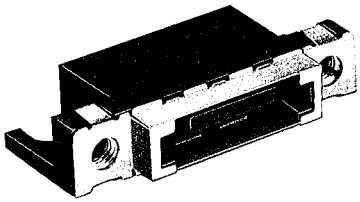

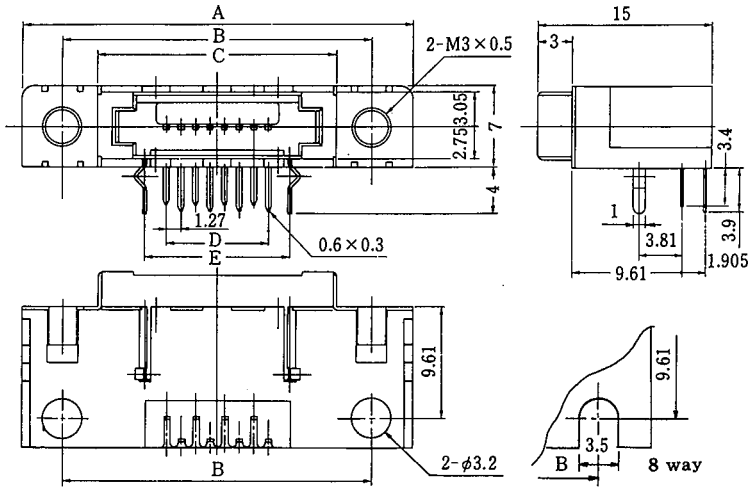

Unit:mm

HRS No.	No. of Pin	Part No.	A	B	C	D	E
CL231-3006-8	6	3110-6S	30.96	23.96	17.91	6.35	9.96
CL231-3001-4	8	3110-8S	33.5	26.5	20.45	8.89	12.5
CL231-3008-3	12	3110-12S	38.58	31.58	25.53	13.97	17.58
CL231-0018-0	16	3110-16S	43.66	36.66	30.61	19.05	22.66

Receptacle (All Shielded Type)

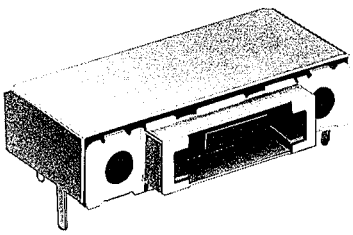

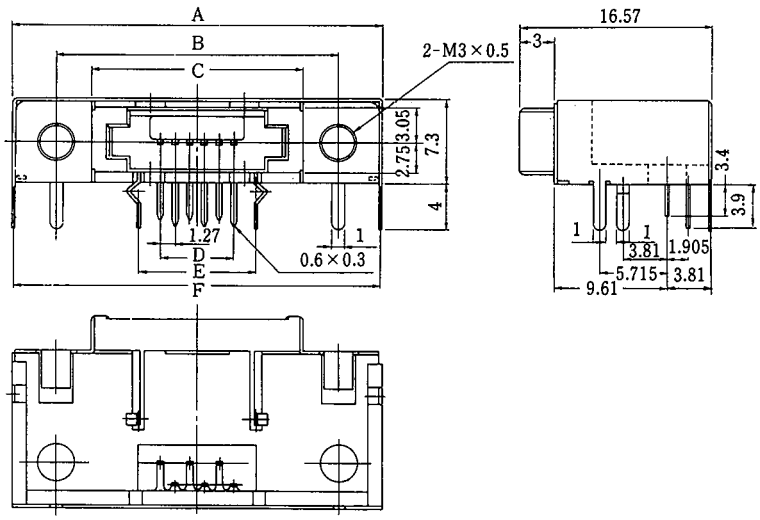

Unit:mm

HRS No.	No. of Pin	Part No.	A	B	C	D	E	F
CL231-3003-0	6	3110-6SA	31.56	23.96	17.91	6.35	9.96	31.26
CL231-0020-2	16	3110-16SA	44.26	36.66	30.61	19.06	22.66	43.96

The product information in this catalog is for reference only. Please request the Engineering Drawing for the most current and accurate design information.
All non-RoHS products have been discontinued, or will be discontinued soon. Please check the products status on the Hirose website RoHS search at www.hirose-connectors.com, or contact your Hirose sales representative.

Receptacle (Without Mounting Hole Type)

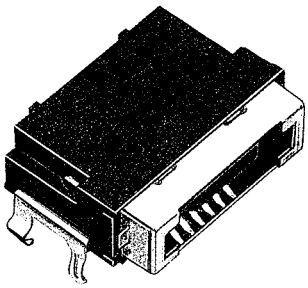

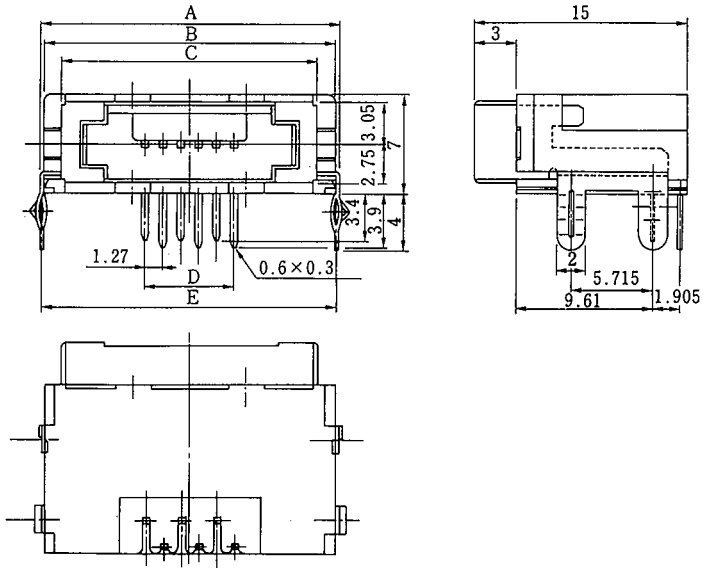

Unit (mm)

HRS No.	No. of pin	Parts No.	A	B	C	D	E
CL231-3017-4	6	3110-6SB	20.86	20.26	17.91	6.35	20.56
CL231-0021-5	14	3110-14SB	31.02	30.42	28.07	16.51	30.72

The product information in this catalog is for reference only. Please request the Engineering Drawing for the most current and accurate design information.
All non-RoHS products have been discontinued, or will be discontinued soon. Please check the products status on the Hirose website RoHS search at www.hirose-connectors.com, or contact your Hirose sales representative.

Plug (Straight Cable Exit Type)

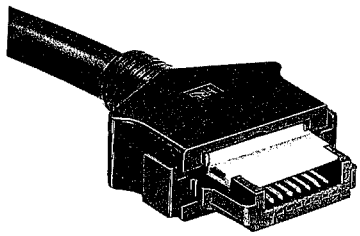

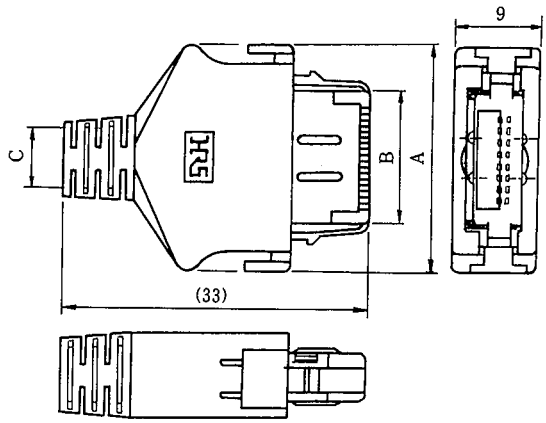

Unit:mm

HRS No.	No. of Pin	Part No.	A	B	C
CL231-3014-6	6	3130-6P-C	21.46	11.36	φ5.8
CL231-3002-7	8	3130-8P-C	24	13.9	φ6.2
CL231-3009-6	12	3130-12P-C	29.08	18.98	φ6.7
CL231-0022-8	14	3130-14P-C	31.62	21.52	φ7.0

Plug (Side Cable Exit Type)

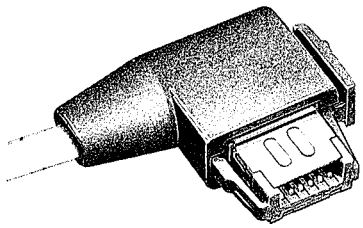

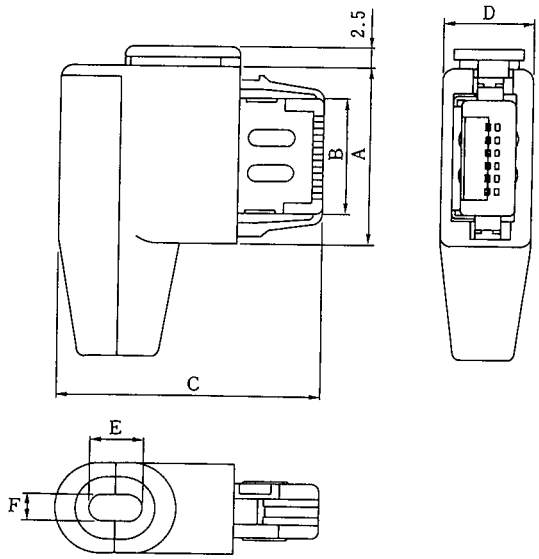

Unit:mm

HRS No.	No. of Pin	Part No.	A	B	C	D	E	F
CL231-3004-2	6	3130-6PA	17.46	11.36	26.15	9.0	5.2	2.8
CL231-0023-0	16	3130-16PA-C	30.16	24.06	26.75	10.2	φ7.2	

The product information in this catalog is for reference only. Please request the Engineering Drawing for the most current and accurate design information.
All non-RoHS products have been discontinued, or will be discontinued soon. Please check the products status on the Hirose website RoHS search at www.hirose-connectors.com, or contact your Hirose sales representative.

Panel Cutout (Thickness of Panel: Max.1.6mm)

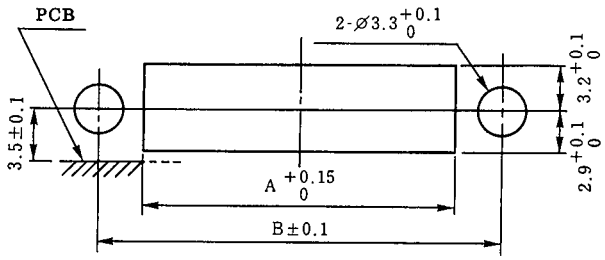

Unit: mm

HRS No.	No. of Pin	Part No.	A	B
CL231-3006-8	6	3110- 6S	18.06	23.96
CL231-3001-4	8	3110- 8S	20.6	26.5
CL231-3008-3	12	3110-12S	25.68	31.58
CL231-0018-0	16	3110-16S	30.76	36.66
CL231-0021-5	14	3110-14SB	28.22	—

Coupling Status

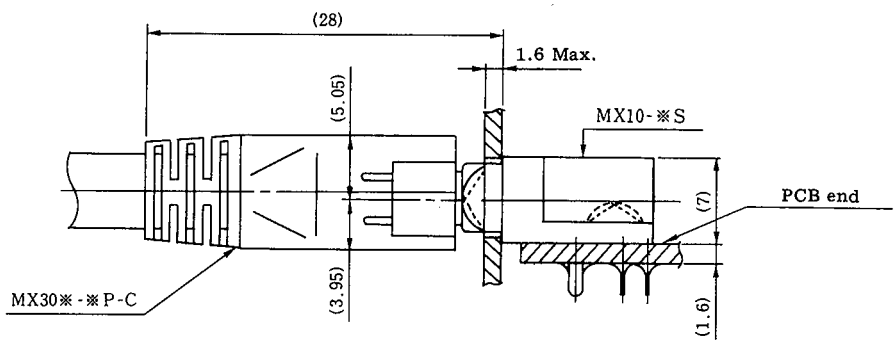

Note: Screw for Panel: M3 x 0.5 length 6 mm.

The product information in this catalog is for reference only. Please request the Engineering Drawing for the most current and accurate design information.
All non-RoHS products have been discontinued, or will be discontinued soon. Please check the products status on the Hirose website RoHS search at www.hirose-connectors.com, or contact your Hirose sales representative.

Backboard Pattern

(Standard)

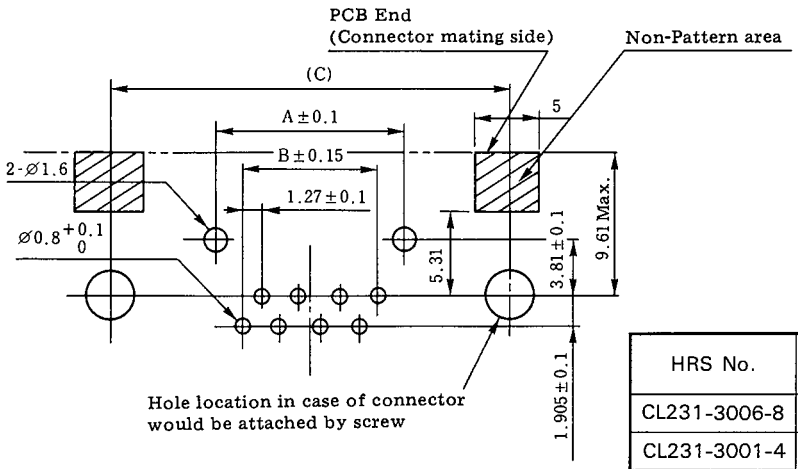

Unit:mm

HRS No.	No. of Pin	Part No.	A	B	C
CL231-3006-8	6	3110-6S	9.96	6.35	23.96
CL231-3001-4	8	3110-8S	12.5	8.39	26.5
CL231-3008-3	12	3110-12S	17.58	13.97	31.58
CL231-0018-0	16	3110-16S	22.66	19.05	36.66

(All Shielded Type)

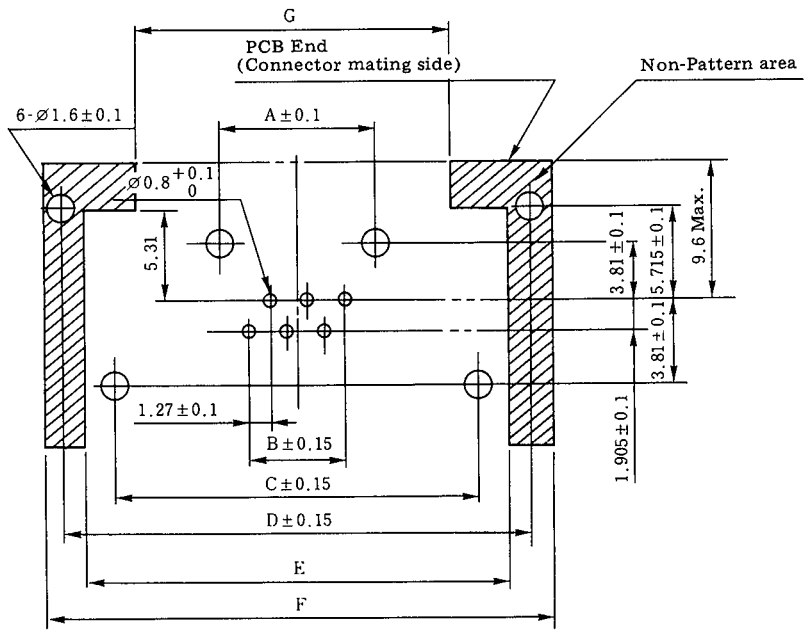

Unit:mm

HRS No.	No. of Pin	Part No.	A	B	C	D	E	F	G
CL231-3003-0	6	3110-6SA	9.96	6.35	23.96	31.26	27.56	31.96	18.96
CL231-0020-2	16	3110-16SA	22.66	19.05	36.66	43.96	40.26	44.66	31.66

The product information in this catalog is for reference only. Please request the Engineering Drawing for the most current and accurate design information.
All non-RoHS products have been discontinued, or will be discontinued soon. Please check the products status on the Hirose website RoHS search at www.hirose-connectors.com, or contact your Hirose sales representative.

(Without Mounting Hole Type)

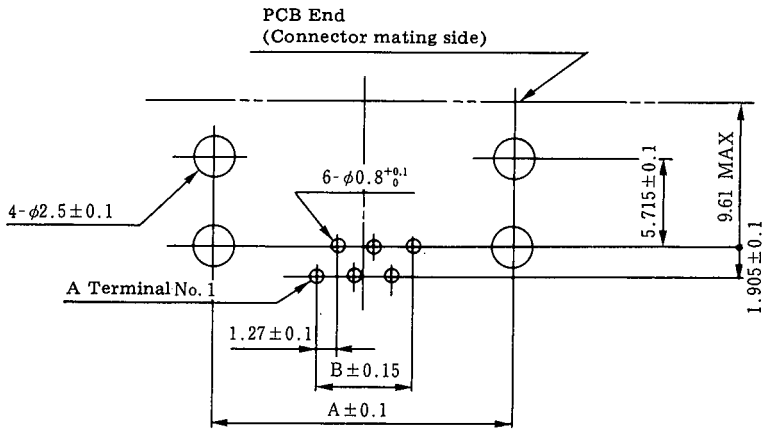

Unit:mm

HRS No.	No. of Pin	Part No.	A	B
CL231-3017-4	6	3110-6SB	20.56	6.35
CL231-0021-5	14	3110-14SB	30.72	16.51

The product information in this catalog is for reference only. Please request the Engineering Drawing for the most current and accurate design information.
All non-RoHS products have been discontinued, or will be discontinued soon. Please check the products status on the Hirose website RoHS search at www.hirose-connectors.com, or contact your Hirose sales representative.

Connecting Method

Procedure	Specification	Procedure	Specification
1. Termination	Peel the shielded braid and terminate treatment. 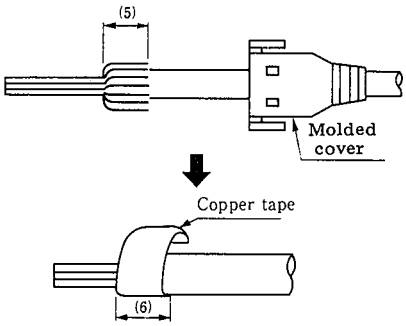	4. IDC	Insert the guide plate into the plug temporarily and press it. 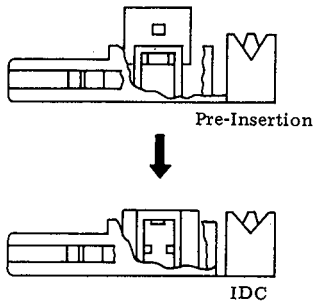
2. Wire configuration	Configure the cable conductor to the corresponding guide plate. 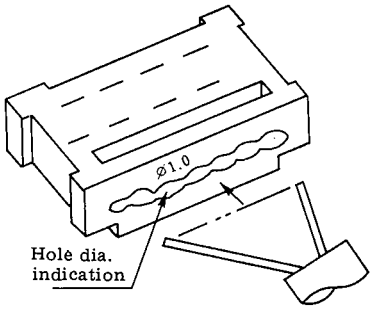	5. Covering and clamping	Cover the ground plate B and fasten the cable by clamping. 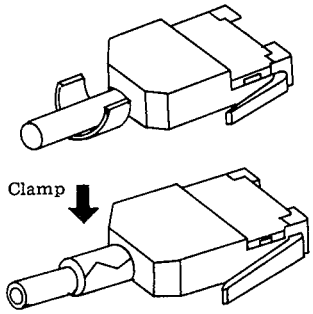
3. Cutting and clamping	Cut the remaining part of the wire and clamp the cable conductor. 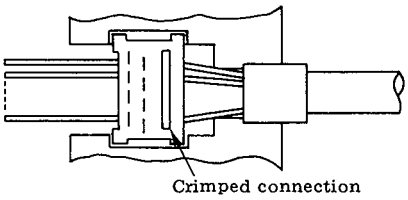	6. Covering	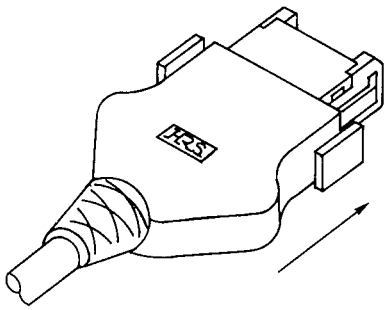

The product information in this catalog is for reference only. Please request the Engineering Drawing for the most current and accurate design information.
All non-RoHS products have been discontinued, or will be discontinued soon. Please check the products status on the Hirose website RoHS search at www.hirose-connectors.com, or contact your Hirose sales representative.

Tooling

(Straight Cable Exit Type)

Connector	Process	Tool Name	
3130–6P–C	Wire clamp Remaining part of cable cut	Hi-Flex Connecting press (CL550–0082–2)	3130–6CT
	Crimping, Clamp		3130–6GP
3130–8P–C	Wire clamp Remaining part of cable cut		3130–8CT
	Crimping, Clamp		3130–8GP
3130–12P–C	Wire clamp Remaining part of cable cut		3130–12CT
	Crimping, Clamp		3130–12GP
3130–14P–C	Wire clamp Remaining part of cable cut		3130–14CT
	Crimping, Clamp		3130–14GP

(Side Cable Exit Type)

Connector	Process	Tool Name	
3130–6PA	Wire clamp Remaining part of cable cut	Hi-Flex Connecting press (CL550–0082–2)	3130–6CT–A
	Crimping, Clamp		3130–6GP–A
3130–16PA–C	Wire clamp Remaining part of cable cut		3130–16CT–A
	Crimping, Clamp		3130–16GP–A

Компания «ЭлектроПласт» предлагает заключение долгосрочных отношений при поставках импортных электронных компонентов на взаимовыгодных условиях!

Наши преимущества:

- Оперативные поставки широкого спектра электронных компонентов отечественного и импортного производства напрямую от производителей и с крупнейших мировых складов;
- Поставка более 17-ти миллионов наименований электронных компонентов;
- Поставка сложных, дефицитных, либо снятых с производства позиций;
- Оперативные сроки поставки под заказ (от 5 рабочих дней);
- Экспресс доставка в любую точку России;
- Техническая поддержка проекта, помощь в подборе аналогов, поставка прототипов;
- Система менеджмента качества сертифицирована по Международному стандарту ISO 9001;
- Лицензия ФСБ на осуществление работ с использованием сведений, составляющих государственную тайну;
- Поставка специализированных компонентов (Xilinx, Altera, Analog Devices, Intersil, Interpoint, Microsemi, Aeroflex, Peregrine, Syfer, Eurofarad, Texas Instrument, Miteq, Cobham, E2V, MA-COM, Hittite, Mini-Circuits,General Dynamics и др.);

Помимо этого, одним из направлений компании «ЭлектроПласт» является направление «Источники питания». Мы предлагаем Вам помощь Конструкторского отдела:

- Подбор оптимального решения, техническое обоснование при выборе компонента;
- Подбор аналогов;
- Консультации по применению компонента;
- Поставка образцов и прототипов;
- Техническая поддержка проекта;
- Защита от снятия компонента с производства.

Как с нами связаться

Телефон: 8 (812) 309 58 32 (многоканальный)
Факс: 8 (812) 320-02-42
Электронная почта: org@eplast1.ru
Адрес: 198099, г. Санкт-Петербург, ул. Калинина, дом 2, корпус 4, литера А.