FAST CMOS 16-BIT BIDIRECTIONAL TRANSCEIVER

IDT54/74FCT162245T/AT/CT

FEATURES:

- **0.5 MICRON CMOS Technology**
- **High-speed, low-power CMOS replacement for ABT functions**
- **Typical $t_{SK(o)}$ (Output Skew) < 250ps**
- **Low input and output leakage ≤ 1µA (max.)**
- **ESD > 2000V per MIL-STD-883, Method 3015; > 200V using machine model (C = 200pF, R = 0)**
- **Balanced Output Drivers:**
  - *±24mA (industrial)*
  - *±16mA (military)*
- **Reduced system switching noise**
- **Typical V_{OLP} (Output Ground Bounce) < 0.6V at V_{CC} = 5V, T_A = 25°C**
- **Available in the following packages:**
  - *Industrial: SSOP, TSSOP*
  - *Military: CERPACK*

DESCRIPTION:

The FCT162245T 16-bit transceiver is built using advanced dual metal CMOS technology. These high-speed, low-power transceivers are ideal for synchronous communication between two buses (A and B). The Direction and Output Enable controls operate these devices as either two independent 8-bit transceivers or one 16-bit transceiver. The direction control pin (xDIR) controls the direction of data flow. The output enable pin (x$\overline{OE}$) overrides the direction control and disables both ports. All inputs are designed with hysteresis for improved noise margin.

The FCT162245T has balanced output drive with current limiting resistors. This offers low ground bounce, minimal undershoot, and controlled output fall times–reducing the need for external series terminating resistors. The FCT162245T is a plug-in replacement for the FCT16245T and ABT16245 for on-board interface applications.

FUNCTIONAL BLOCK DIAGRAM

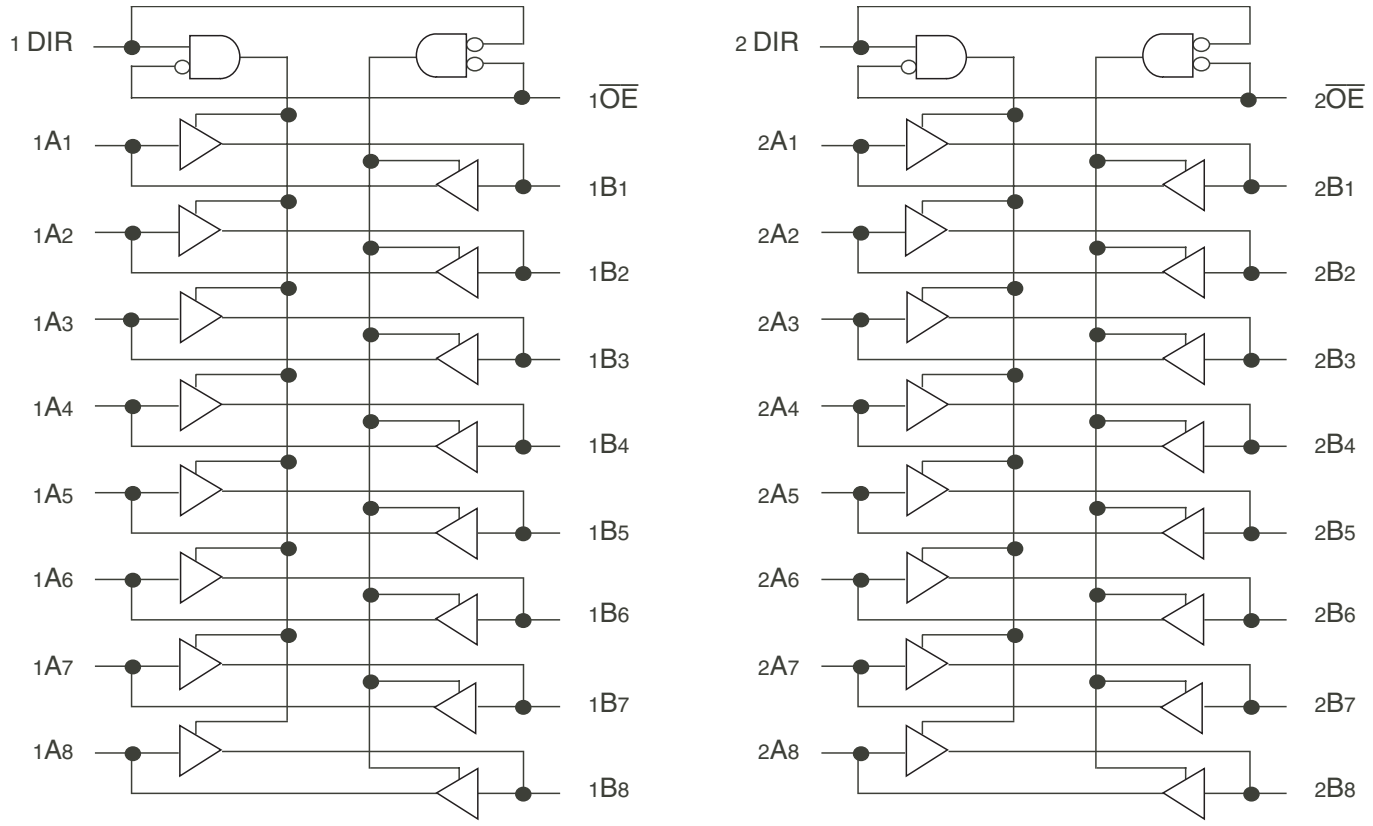

The IDT logo is a registered trademark of Integrated Device Technology, Inc.

© 2009 Integrated Device Technology, Inc.

PIN CONFIGURATION

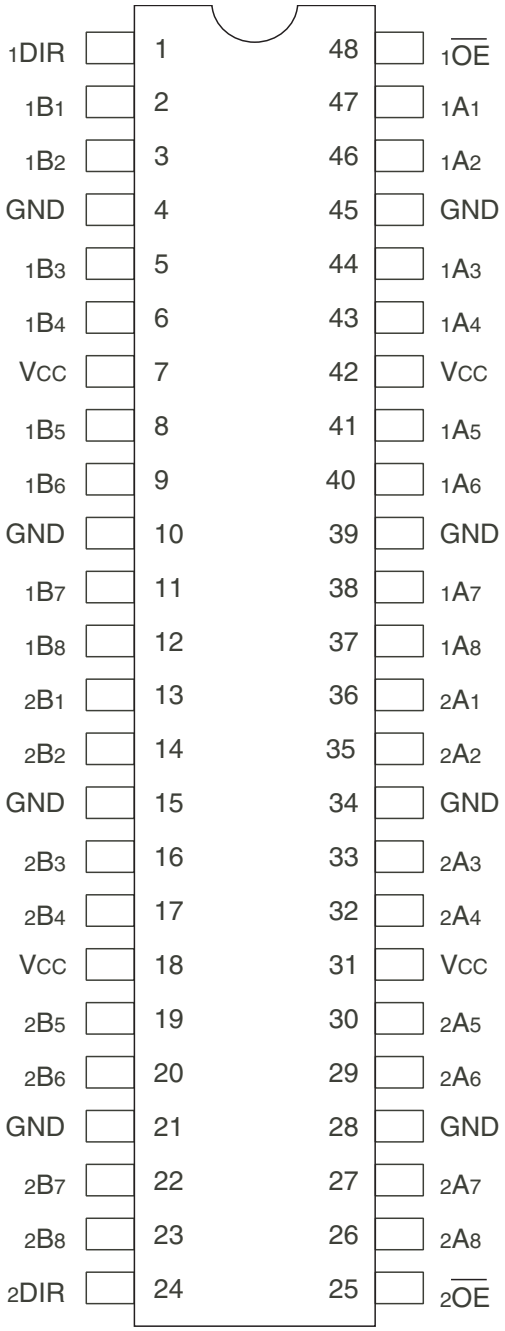

SSOP/ TSSOP/ CERPACK
TOP VIEW

ABSOLUTE MAXIMUM RATINGS(1)

Symbol	Description	Max	Unit
V_{TERM}(2)	Terminal Voltage with Respect to GND	–0.5 to +7	V
V_{TERM}(3)	Terminal Voltage with Respect to GND	–0.5 to V_{CC}+0.5	V
T_{STG}	Storage Temperature	–65 to +150	° C
I_{OUT}	DC Output Current	–60 to +120	mA

NOTES:
1. Stresses greater than those listed under ABSOLUTE MAXIMUM RATINGS may cause permanent damage to the device. This is a stress rating only and functional operation of the device at these or any other conditions above those indicated in the operational sections of this specification is not implied. Exposure to absolute maximum rating conditions for extended periods may affect reliability.
2. All device terminals except FCT162XXXT AND FCT166XXXT (A-Port) Output and I/O terminals.
3. Output and I/O terminals terminals for FCT162XXXT AND FCT166XXXT (A-Port).

CAPACITANCE (T_A = +25°C, F = 1.0MHz)

Symbol	Parameter(1)	Conditions	Typ.	Max.	Unit
C_{IN}	Input Capacitance	V_{IN} = 0V	3.5	6	pF
C_{OUT}	Output Capacitance	V_{OUT} = 0V	3.5	8	pF

NOTE:
1. This parameter is measured at characterization but not tested.

PIN DESCRIPTION

Pin Names	Description
x$\overline{OE}$	Output Enable Inputs (Active LOW)
xDIR	Direction Control Input
xAx	Side A Inputs or 3-State Outputs
xBx	Side B Inputs or 3-State Outputs

FUNCTION TABLE(1)

Inputs		
x$\overline{OE}$	xDIR	Outputs
L	L	Bus B Data to Bus A
L	H	Bus A Data to Bus B
H	X	High Z State

NOTE:
1. H = HIGH Voltage Level
   L = LOW Voltage Level
   X = Don't Care
   Z = High-Impedance

DC ELECTRICAL CHARACTERISTICS OVER OPERATING RANGE

Following Conditions Apply Unless Otherwise Specified:
Industrial: T_A = –40°C to +85°C, V_{CC} = 5.0V ±10%; Military: T_A = –55°C to +125°C, V_{CC} = 5.0V ±10%

Symbol	Parameter	Test Conditions[1]		Min.	Typ.[2]	Max.	Unit
V_{IH}	Input HIGH Level	Guaranteed Logic HIGH Level		2	—	—	V
V_{IL}	Input LOW Level	Guaranteed Logic LOW Level		—	—	0.8	V
I_{IH}	Input HIGH Current (Input pins)[5]	V_{CC} = Max.	$V_I = V_{CC}$	—	—	±1	µA
	Input HIGH Current (I/O pins)[5]			—	—	±1	
I_{IL}	Input LOW Current (Input pins)[5]		V_I = GND	—	—	±1	
	Input LOW Current (I/O pins)[5]			—	—	±1	
I_{OZH}	High Impedance Output Current	V_{CC} = Max.	V_O = 2.7V	—	—	±1	µA
I_{OZL}	(3-State Output pins)[5]		V_O = 0.5V	—	—	±1	
V_{IK}	Clamp Diode Voltage	V_{CC} = Min., I_{IN} = –18mA		—	–0.7	–1.2	V
I_{OS}	Short Circuit Current	V_{CC} = Max., V_O = GND[3]		–80	–140	–250	mA
V_H	Input Hysteresis	—		—	100	—	mV
I_{CCL} I_{CCH} I_{CCZ}	Quiescent Power Supply Current	V_{CC} = Max. V_{IN} = GND or V_{CC}		—	5	500	µA

OUTPUT DRIVE CHARACTERISTICS

Symbol	Parameter	Test Conditions[1]		Min.	Typ.[2]	Max.	Unit
I_{ODL}	Output LOW Current	V_{CC} = 5V, V_{IN} = V_{IH} or V_{IL}, V_O = 1.5V[3]		60	115	200	mA
I_{ODH}	Output HIGH Current	V_{CC} = 5V, V_{IN} = V_{IH} or V_{IL}, V_O = 1.5V[3]		–60	–115	–200	mA
V_{OH}	Output HIGH Voltage	V_{CC} = Min V_{IN} = V_{IH} or V_{IL}	I_{OH} = –16mA MIL I_{OH} = –24mA IND	2.4	3.3	—	V
V_{OL}	Output LOW Voltage	V_{CC} = Min V_{IN} = V_{IH} or V_{IL}	I_{OH} = 16mA MIL I_{OH} = 24mA IND	—	0.3	0.55	V

NOTES:
1. For conditions shown as Min. or Max., use appropriate value specified under Electrical Characteristics for the applicable device type.
2. Typical values are at V_{CC} = 5.0V, +25°C ambient.
3. Not more than one output should be tested at one time. Duration of the test should not exceed one second.
4. Duration of the condition can not exceed one second.
5. This test limit for this parameter is ±5µA at T_A = –55°C.

POWER SUPPLY CHARACTERISTICS

Symbol	Parameter	Test Conditions[1]		Min.	Typ.[2]	Max.	Unit
ΔI_{CC}	Quiescent Power Supply Current TTL Inputs HIGH	V_{CC} = Max. V_{IN} = 3.4V[3]		—	0.5	1.5	mA
I_{CCD}	Dynamic Power Supply Current[4]	V_{CC} = Max. Outputs Open $x\overline{OE}$ = xDIR = GND One Input Toggling 50% Duty Cycle	V_{IN} = V_{CC} V_{IN} = GND	—	60	100	µA/MHz
I_C	Total Power Supply Current[6]	V_{CC} = Max. Outputs Open fi = 10MHz 50% Duty Cycle $x\overline{OE}$ = xDIR = GND One Bits Togging	V_{IN} = V_{CC} V_{IN} = GND	—	0.6	1.5	mA
			V_{IN} = 3.4V V_{IN} = GND	—	0.9	2.3	
		V_{CC} = Max. Outputs Open fi = 2.5MHz 50% Duty Cycle $x\overline{OE}$ = xDIR = GND Sixteen Bits Togging	V_{IN} = V_{CC} V_{IN} = GND	—	2.4	4.5[5]	
			V_{IN} = 3.4V V_{IN} = GND	—	6.4	16.5[5]	

NOTES:
1. For conditions shown as Min. or Max., use appropriate value specified under Electrical Characteristics for the applicable device type.
2. Typical values are at V_{CC} = 5.0V, +25°C ambient.
3. Per TTL driven input (V_{IN} = 3.4V). All other inputs at V_{CC} or GND.
4. This parameter is not directly testable, but is derived for use in Total Power Supply Calculations.
5. Values for these conditions are examples of the I_{CC} formula. These limits are guaranteed but not tested.
6. $I_C = I_{QUIESCENT} + I_{INPUTS} + I_{DYNAMIC}$
   $I_C = I_{CC} + \Delta I_{CC} D_H N_T + I_{CCD} (f_{CP} N_{CP}/2 + f_i N_i)$
   I_{CC} = Quiescent Current (I_{CCL}, I_{CCH} and I_{CCZ})
   ΔI_{CC} = Power Supply Current for a TTL High Input (V_{IN} = 3.4V)
   D_H = Duty Cycle for TTL Inputs High
   N_T = Number of TTL Inputs at D_H
   I_{CCD} = Dynamic Current caused by an Input Transition Pair (HLH or LHL)
   f_{CP} = Clock Frequency for Register Devices (Zero for Non-Register Devices)
   N_{CP} = Number of Clock Inputs at f_{CP}
   fi = Input Frequency
   Ni = Number of Inputs at fi

SWITCHING CHARACTERISTICS OVER OPERATING RANGE

			54FCT162445T		54/74FCT162245AT				54/74FCT162245CT				
			Mil.		Ind.		Mil.		Ind.		Mil.		
Symbol	Parameter	Condition[1]	Min.[2]	Max.	Min.[2]	Max.	Min.[2]	Max.	Min.[2]	Max.	Min.[2]	Max.	Unit
t_{PLH} t_{PHL}	Propagation Delay A to B, B to A	C_L = 50pF R_L = 500Ω	1.5	7.5	1.5	4.6	1.5	4.9	1.5	3.5	1.5	4.5	ns
t_{PZH} t_{PZL}	Output Enable Time $x\overline{OE}$ to A or B		1.5	10	1.5	6.2	1.5	6.5	1.5	4.4	1.5	6.2	ns
t_{PHZ} t_{PLZ}	Output Disable Time $x\overline{OE}$ to A or B		1.5	10	1.5	5	1.5	6	1.5	4	1.5	5.2	ns
t_{PZH} t_{PZL}	Output Enable Time xDIR to A or B[4]		1.5	10	1.5	6.2	1.5	6.5	1.5	4.8	1.5	6.2	ns
t_{PHZ} t_{PLZ}	Output Disable Time xDIR to A or B[4]		1.5	10	1.5	5	1.5	6	1.5	4	1.5	5.2	ns
$t_{SK(o)}$	Output Skew[3]		—	0.5	—	0.5	—	0.5	—	0.5	—	0.5	ns

NOTES:
1. See test circuit and waveforms.
2. Minimum limits are guaranteed but not tested on Propagation Delays.
3. Skew between any two outputs of the same package switching in the same direction. This parameter is guaranteed by design.
4. This parameter is guaranteed but not tested.

TEST CIRCUITS AND WAVEFORMS

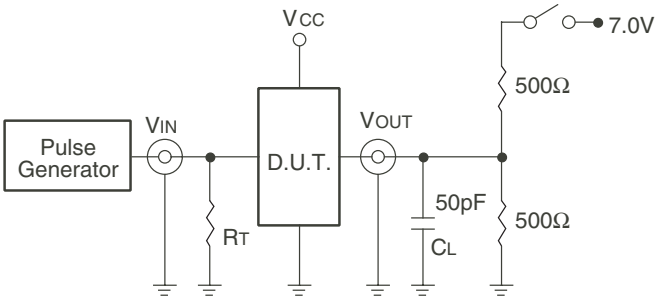

Test Circuits for All Waveforms

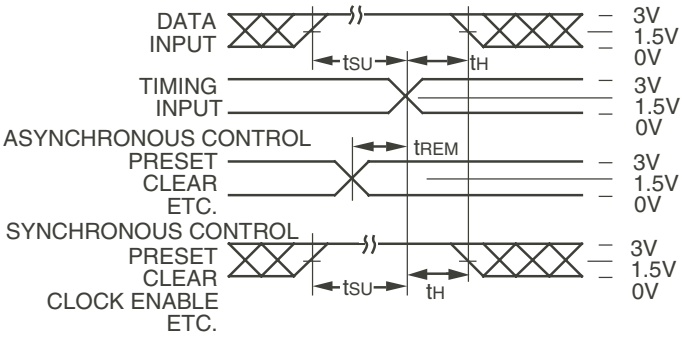

Set-up, Hold, and Release Times

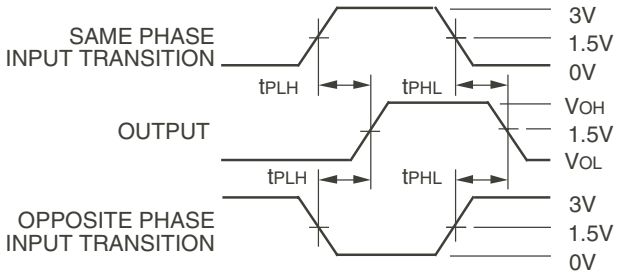

Propagation Delay

SWITCH POSITION

Test	Switch
Open Drain Disable Low Enable Low	Closed
All Other Tests	Open

DEFINITIONS:

C_L = Load capacitance: includes jig and probe capacitance.

R_T = Termination resistance: should be equal to Z_{OUT} of the Pulse Generator.

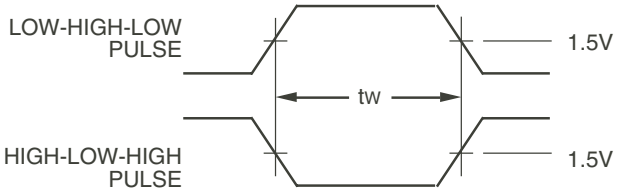

Pulse Width

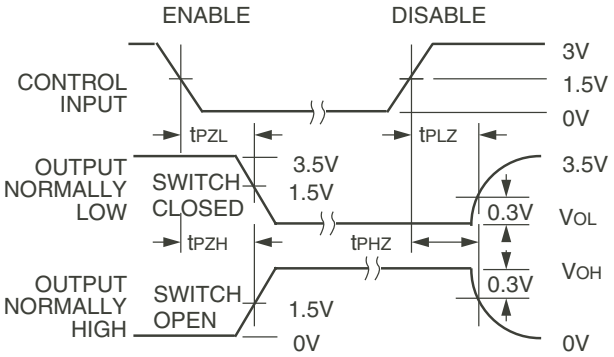

Enable and Disable Times

NOTES:

1. Diagram shown for input Control Enable-LOW and input Control Disable-HIGH.
2. Pulse Generator for All Pulses: Rate ≤ 1.0MHz; t_F ≤ 2.5ns; t_R ≤ 2.5ns.

ORDERING INFORMATION

XX FCT XXX XXXX XX X

Temp. Range | Family | Device Type | Package | Process

Process:
- Blank — Industrial
- B — MIL-STD-883, Class B

Package:

Industrial Options
- PVG — Shrink Small Outline Package - Green
- PAG — Thin Shrink Small Outline Package - Green

Military Options
- E — CERPACK

Device Type:
- 245T, 245AT, 245CT — 16-Bit Buffer/Line Driver

Family:
- 162 — Double-Density, 5 Volt, Balanced Drive

Temp. Range:
- 54 — 55 C to +125 C
- 74 — 40 C to +85 C

Datasheet Document History

09/06/09 Pg.6 Updated the ordering information by removing the "IDT" notation and non RoHS part.

CORPORATE HEADQUARTERS
6024 Silver Creek Valley Road
San Jose, CA 95138

for SALES:
800-345-7015 or 408-284-8200
fax: 408-284-2775
www.idt.com

for Tech Support:
logichelp@idt.com

Компания «ЭлектроПласт» предлагает заключение долгосрочных отношений при поставках импортных электронных компонентов на взаимовыгодных условиях!

Наши преимущества:

- Оперативные поставки широкого спектра электронных компонентов отечественного и импортного производства напрямую от производителей и с крупнейших мировых складов;
- Поставка более 17-ти миллионов наименований электронных компонентов;
- Поставка сложных, дефицитных, либо снятых с производства позиций;
- Оперативные сроки поставки под заказ (от 5 рабочих дней);
- Экспресс доставка в любую точку России;
- Техническая поддержка проекта, помощь в подборе аналогов, поставка прототипов;
- Система менеджмента качества сертифицирована по Международному стандарту ISO 9001;
- Лицензия ФСБ на осуществление работ с использованием сведений, составляющих государственную тайну;
- Поставка специализированных компонентов (Xilinx, Altera, Analog Devices, Intersil, Interpoint, Microsemi, Aeroflex, Peregrine, Syfer, Eurofarad, Texas Instrument, Miteq, Cobham, E2V, MA-COM, Hittite, Mini-Circuits,General Dynamics и др.);

Помимо этого, одним из направлений компании «ЭлектроПласт» является направление «Источники питания». Мы предлагаем Вам помощь Конструкторского отдела:

- Подбор оптимального решения, техническое обоснование при выборе компонента;
- Подбор аналогов;
- Консультации по применению компонента;
- Поставка образцов и прототипов;
- Техническая поддержка проекта;
- Защита от снятия компонента с производства.

Как с нами связаться

Телефон: 8 (812) 309 58 32 (многоканальный)
Факс: 8 (812) 320-02-42
Электронная почта: org@eplast1.ru
Адрес: 198099, г. Санкт-Петербург, ул. Калинина, дом 2, корпус 4, литера А.