OMRON

G-SERIES SERVO SYSTEM

Save space, save wiring, save time

» Compact size

» MECHATROLINK-II

» Enhanced performance

realizing

Compact in size
big in features

Always with your application in mind, G-Series servo drives give you additional functionalities to develop your machines faster, more flexibly and more efficiently.

Improved speed response, a wider range of servomotors and intuitive and fast auto-tuning belong to the new features, making it suitable for many applications, and always with the expected Omron quality and support.

Key features and benefits:

- Pocket-size servo with smallest footprint 15 x 4 cm
- Auto-tuning for easy and quick start-up
- Built-in MECHATROLINK-II motion bus reduces cabling and allows remote servo configuration and diagnosis
- High starting torque: 300% for 3 secs.
- Positioning, speed or torque control
- Separate power and control power supply
- Fast and accurate positioning
- Servomotor range from 50 W to 1.5 kW
- Incremental and absolute encoder available
- Cylindrical and flat servo motors up to 3,000 rpm
- Compatible with SmartStep 2 servomotors
- Vibration suppression

Save space, save wiring, save time

From multiple cables...

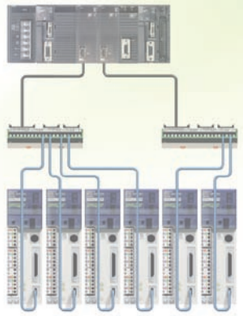

to only one cable

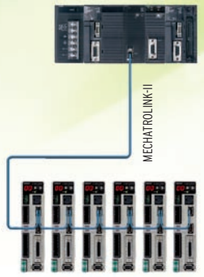

Easy connection: single cable only!

With their built-in MECHATROLINK-II motion bus, just a single cable is needed to connect servos together. So you not only save on wiring and installation time, you also significantly reduce the chance of connection errors. Reliability is increased since the single-cable connection is much more rugged than a multiple-wiring solution.

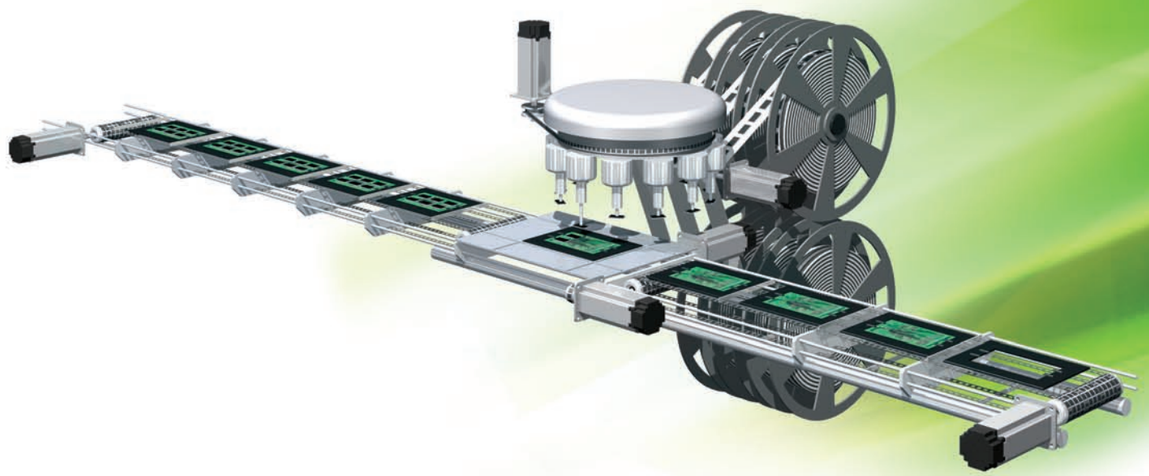

Fast and simple auto-tuning

The graphs show a move profile with a G-series servo in an application with an inertia ratio of 16:1. Tuning is possible via the easy to use CX-Drive, and takes just 1 minute to complete.
The result is superb control, ensuring the servo and hence machine operates at its optimal point, with next to zero knowledge required from the user.

Once running, the on-board real time auto-tuning function takes care of the servo operation relative to the load inertia, again ensuring the quality of the finished produced part.

In addition, numerous suppression and notch filters are available to suppress machine vibration independent of machine direction.

Before auto-tuning

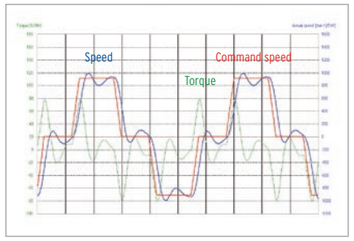

After auto-tuning

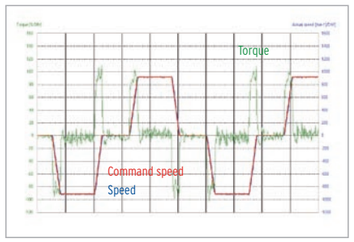

G-Series + NCF: Optimum positioning for up to 16 axes

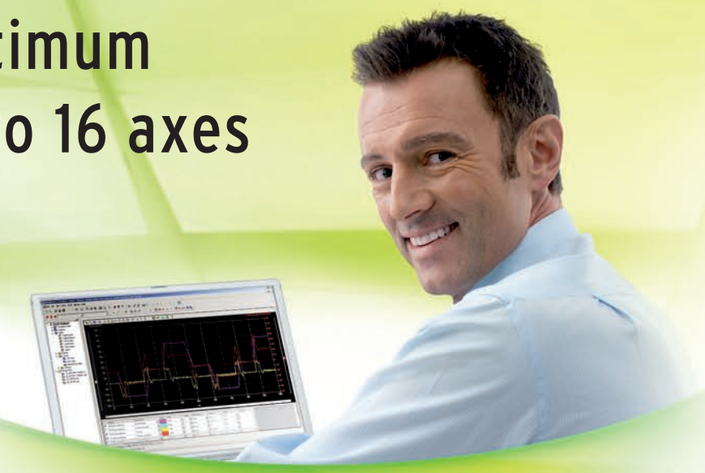

Complete and compact positioning system

In a minimum of space you can have a complete and powerful PTP system when combining the CJ1W-NCF71 unit and the G-Series servo. This configuration offers 16-axis positioning with linear and circular interpolation, as well as interrupt feeding. The NCF and the G-Series offer the ideal solution for applications where space is tight.

Full transparency from a remote host

When the G-Series is controlled by NCF positioning unit, the servo drive is fully transparent to a remote PC. This is achieved over MECHATROLINK-II from the G-Series to the PLC and over any serial or Ethernet link between the PLC and PC. Hence complying fully with Omron Smart Platform.

PLCopen

A global standard for industrial control programming, PLCopen provides a standardized programming interface to harmonize the way people design and operate industrial control.

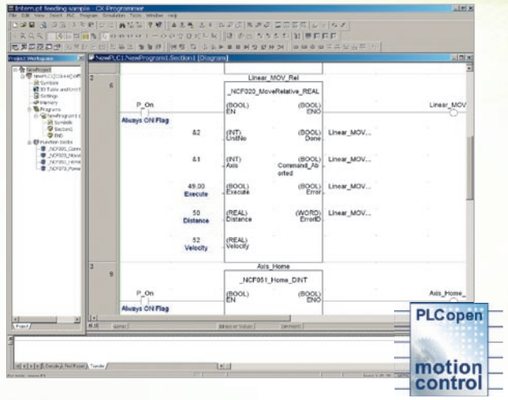

NCF – key features and benefits

- 16 axes, point-to-point positioning over ML II
- System scalability with models for 2, 4 and 16 axes
- Easy, quick and reliable setup
- Optimized for positioning applications
- Simplified wiring to drives
- Integration with Omron Smart Platform

R88D-GN□/R88M-G□

G-Series servo system

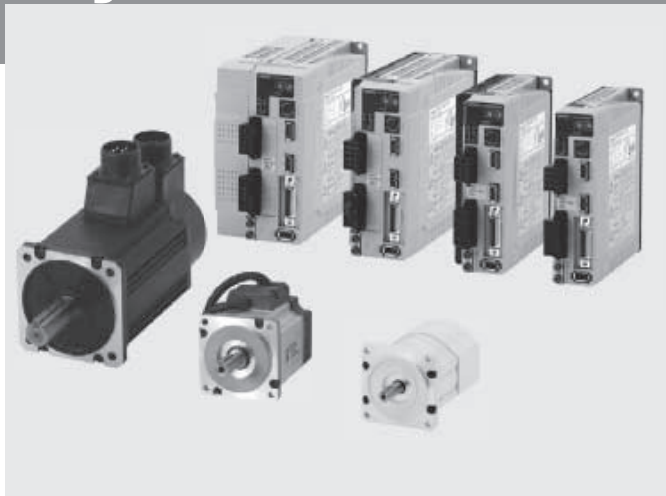

Compact in size big in features. Save space, save wiring, save time

- Built-in MECHATROLINK-II motion bus
- Position, speed and torque control
- High-response frequency of 1 kHZ
- Real time auto-tuning
- Vibration suppression
- Separate power and control power supply
- Available motors with absolute and incremental with 17-bit encoder for greater accuracy
- Cylindrical and flat servo motors up to 3000 rpm
- Servomotors supported by SmartStep2, G-Series and G5-Series servo drives
- Peak torque 300% of continuous torque during 3 seconds or more depending on model
- IP65 and shaft oil seal available

Ratings

- 230 VAC single-phase 100 W to 1.5 kW (8.62 Nm)

System configuration

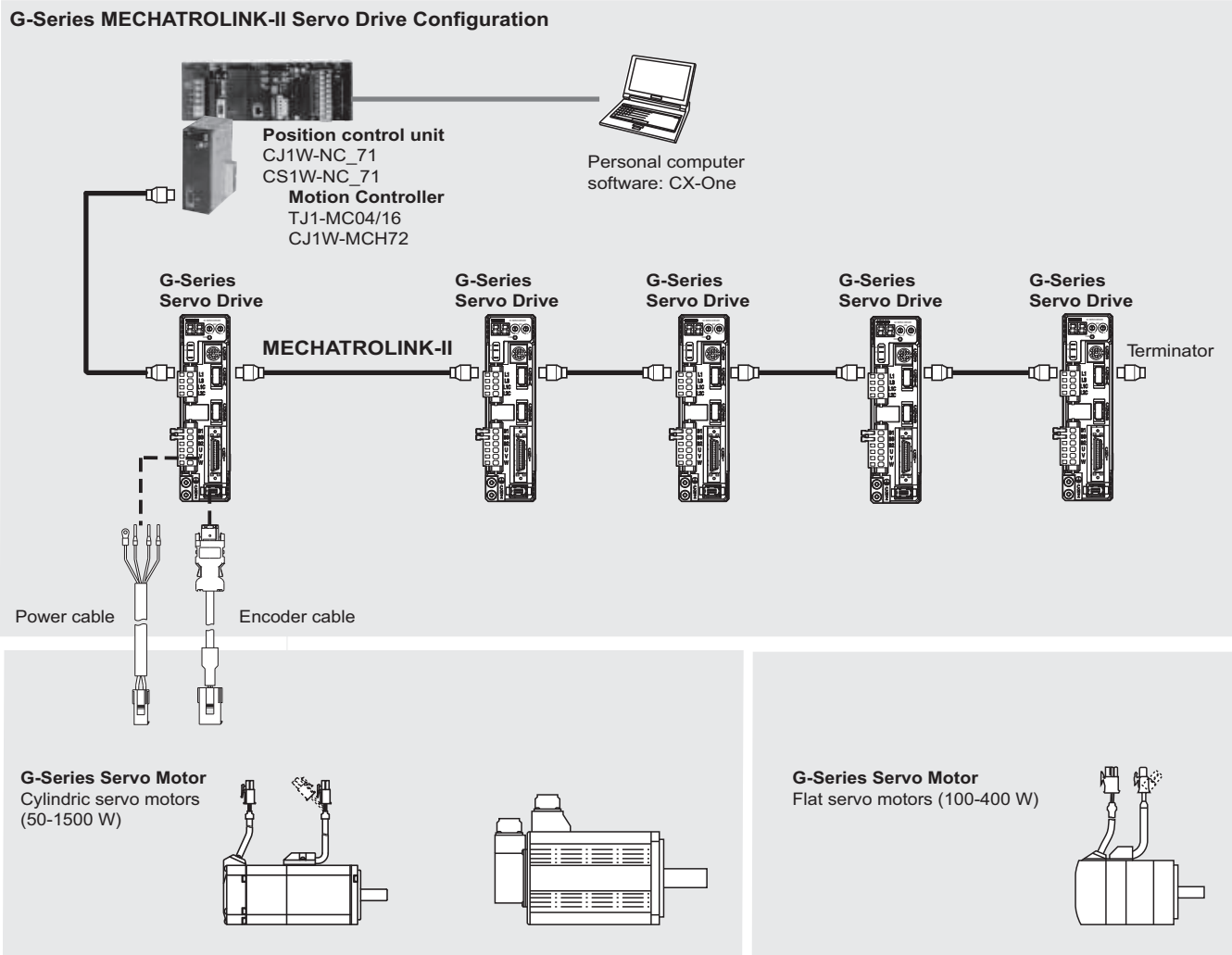

Servo drive type designation

Servo drive

R88D-GN04H-ML2

- G-Series servo drive
- N: Network type
- Capacity

01	100 W
02	200 W
04	400 W
08	750 W
10	1.0 kW
15	1.5 kW

- H: Source voltage
  - H: 230 V
- ML2: Model
  - ML2: MECHATROLINK-II communications

Servo drive specifications

G-Series servo drive

Servo drive type			R88D-GN□	01H-ML2	02H-ML2	04H-ML2	08H-ML2	10H-ML2	15H-ML2
Applicable servomotor			R88M-G□	05030□/10030□	20030□	40030□	75030□	G1K020T□	90010T□/1K030T□/1K5□0T□
			R88M-GP□	10030□	20030□	40030□	-	-	-
Basic specifications	Max. applicable motor capacity		W	100	200	400	750	1000	1500
	Continuous output current		Arms	1.16	1.6	2.7	4.0	5.9	9.8
	Max. output current		Arms	3.5	5.3	7.1	14.1	21.2	28.3
	Input power	Main circuit		For single-phase, 200 to 240 VAC +10 to -15% (50/60 Hz)			For single-phase/ three-phase, 200 to 240 VAC +10 to -15% (50/60 Hz)		
	Supply	Control circuit		For single-phase, 200 to 240 VAC +10 to -15% (50/60 Hz)					
	Control method			IGBT-driven PWM method					
	Feedback			Serial encoder (incremental/absolute)					
	Conditions	Usage/storage temperature		0 to +55 °C / -20 to 65 °C					
		Usage/storage humidity		90% RH or less (non-condensing)					
		Altitude		1000m or less above sea level					
		Vibration/shock resistance		5.88 m/s^2 / 19.6 m/s^2					
	Configuration			Base mounted					
	Approx. weight		Kg	0.8		1.1	1.5	1.7	
Position/Speed/torque control mode	Performance	Speed control range		1:5000					
		Speed variance	Load variance	During 0 to 100% load ±0.01 max. (at rated speed)					
			Voltage variance	0% at ±10% of rated voltage (at rated speed)					
			Temperature variance	0 to 50ºC ±0.1% max. (at rated speed)					
		Frequency characteristics		1 kHz					
		Torque control accuracy (reproducibility)		±3% (at 20% to 100% of rated torque)					
		Soft start time setting		0 to 10 s (acceleration time and deceleration time can be set)					
	Command Input	MECHATROLINK Communication		MECHATROLINK-II commands (for sequence, motion, data setting/reference, monitor, adjustament and other commands)					
I/O signal	Sequence input signal			Emergency stop, 3 external latch signals, forward/reverse torque limit, forward/reverse run prohibit, origin proximity, 3 general-purpose inputs					
	Sequence output signal			It is possible to output three types of signals: positioning completed, speed coincidence, rotation speed detection, servo ready, current limit, speed limit, brake release and warning signal					

Servo drive type			R88D-GN□	01H-ML2	02H-ML2	04H-ML2	08H-ML2	10H-ML2	15H-ML2
Applicable servomotor			R88M-G□	05030□/10030□	20030□	40030□	75030□	G1K020T□	90010T□/1K030T□/1K5□0T□
			R88M-GP□	10030□	20030□	40030□	-	-	-
Integrated functions	Communications	RS-232 communications	Interface	Personal computer					
			Transmission rate	From 2400 to 57600 bps					
			Functions	Parameter setting, status display, alarm display (monitor, clear, history), servo drive data tracing function, test run/autotuning operations, real time trace, absolute encoder setting, default values function					
		MECHATROLINK communications	Communications protocol	MECHATROLINK-II					
			Transmission rate	10 Mbps					
			Data length	32 bytes					
			Functions	Parameter setting, status display, alarm display (monitor, clear, history), default values function					
	Automatic load inertia detection			Horizontal and vertical axis mode. One parameter rigidity setting.					
	Dynamic brake (DB)			Operates when main power OFF, servo alarm, overtravel or servo OFF					
	Regenerative processing			Built-in regeneration resistor in models from 750 W to 1.5 kW. External regeneration resistor optionally.					
	Overtravel (OT) prevention function			Dynamic brake, disables torque or emergency stop torque during POT and NOT operation					
	Emergency stop (STOP)			Emergency stop input					
	Encoder divider function			Optional division pulses possible					
	Electronic gearing			0,01<Numerator/Denominator<100					
	Internal speed setting function			8 internal speeds					
	Protective functions			Overvoltage, undervoltage, overcurrent, overload, regeneration overload, servo drive overheat					
	Analog monitor Ouput			The actual servomotor speed, command speed, torque and number of accumulated pulses can be measured using an oscilloscope or other device.					
	Panel operator	Display functions		A 2-digit 7-segment LED display shows the servo drive status, alarm codes, parameters, etc.					
				MECHATROLINK-II communications status LED indicator (COM)					
		Switches		Rotary switch for setting the MECHATROLINK-II node address					

Servo drive part names

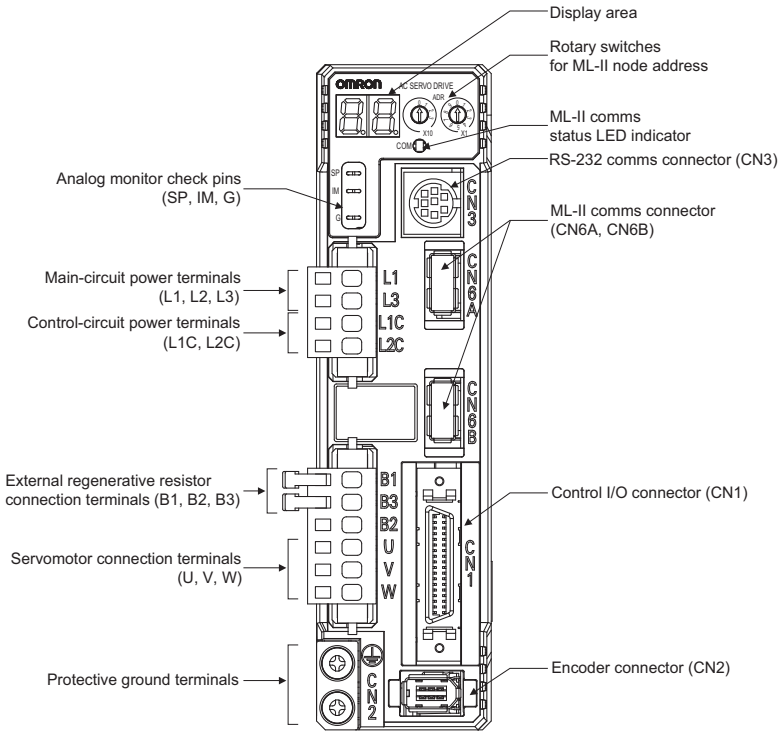

Dimensions

Servo drives

R88D-GN01H-ML2 / GN02H-ML2 (200 V, 100 to 200 W)

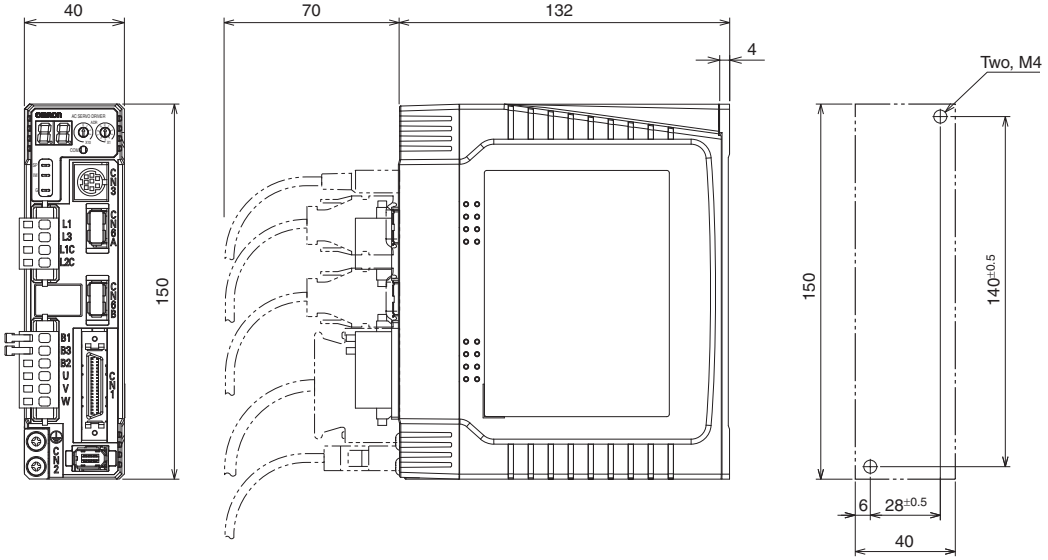

R88D-GN04H-ML2 (200 V, 400 W)

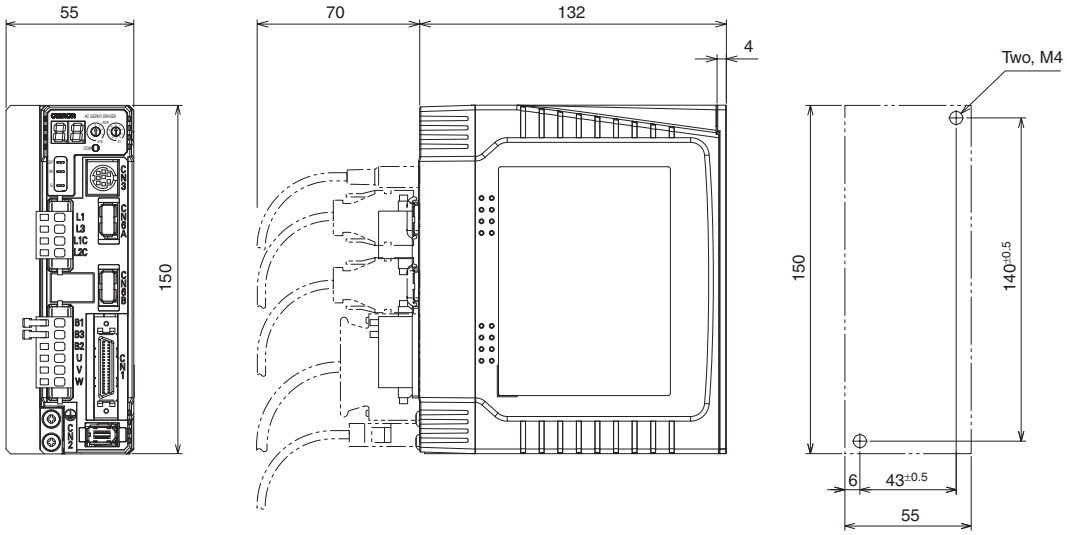

R88D-GN08H-ML2 (200 V, 750 W)

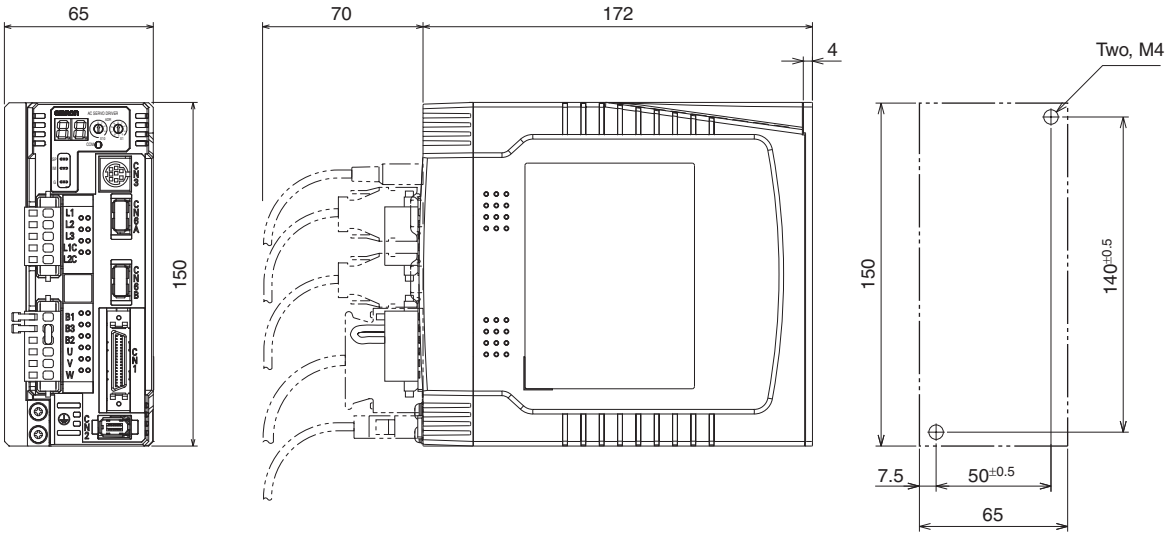

R88D-GN10H-ML2 / GN15H-ML2 (200 V, 1 kW to 1,5 kW)

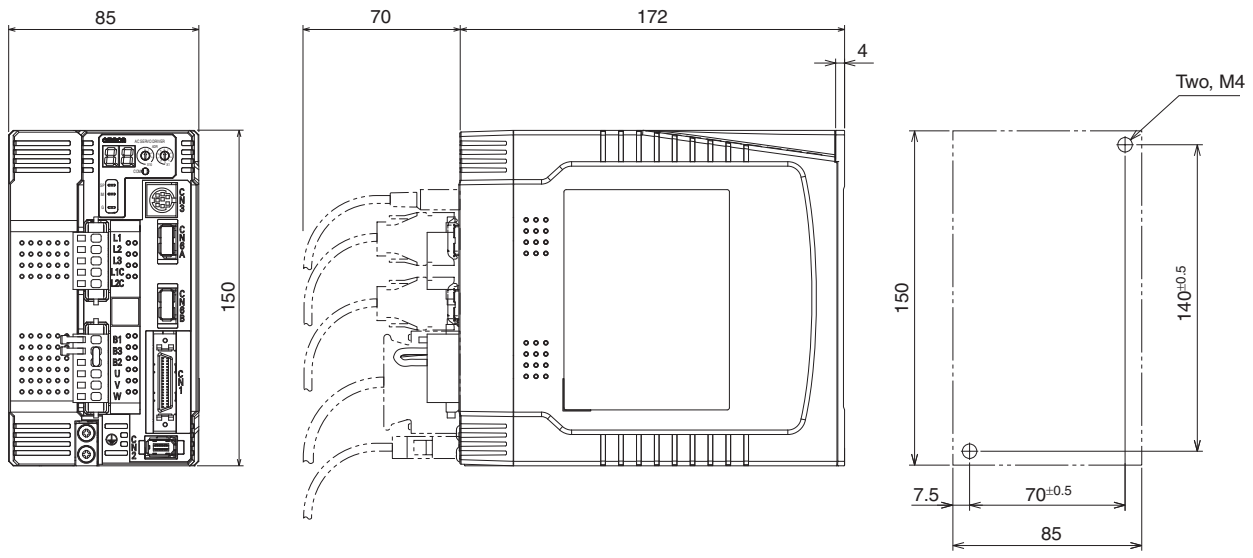

Servo motors type designation

Servo motor

R88M-GP10030H-BOS2

G-Series Servomotor

Motor Type

Blank: Cylinder type

P: Flat type

Capacity

050	50 W
100	100 W
200	200 W
400	400 W
750	750 W
900	900 W
1K0	1 kW
1K5	1.5 kW

Rated Speed (r/min)

10	1000
20	2000
30	3000

Shaft end specifications

Blank	Straigth shaft, no key
S2	Straigth, key, tapped

Oil seal specifications

Blank	No oil seal
O	Oil seal

Brake specifications

Blank	No brake
B	Brake

Voltage and encoder specifications

H: 230 V with incremental encoder

T: 230 V with absolute encoder

Servo motor specifications

Cylindrical servo motors 3000/2000/1000 r/min

Ratings and specifications

Applied voltage			230 V									
Servo motor model R88M-□			G05030□	G10030□	G20030□	G40030□	G75030□	G1K030T	G1K530T	G1K020T	G1K520T	G90010T
Rated output		W	50	100	200	400	750	1000	1500	1000	1500	900
Rated torque		N·m	0.16	0.32	0.64	1.3	2.4	3.18	4.77	4.8	7.15	8.62
Instantaneous peak torque		N·m	0.45	0.90	1.78	3.67	7.05	9.1	12.8	13.5	19.6	18.4
Rated current		A (rms)	1.1		1.6	2.6	4	7.2	9.4	5.6	9.4	7.6
Instantaneous max. current		A (rms)	3.4		4.9	7.9	12.1	21.4	28.5	17.1	28.5	17.1
Rated speed		min^{-1}	3000							2000		1000
Max. speed		min^{-1}	5000				4500	5000		3000		2000
Torque constant		N·m/A (rms)	0.14	0.19	0.41	0.51	0.64	0.44	0.51	0.88	0.76	1.13
Rotor moment of inertia (JM)		$kg·m^2x10^{-4}$	0.025	0.051	0.14	0.26	0.87	1.69	2.59	6.17	11.2	
Allowable load moment of inertia (JL)		Multiple of (JM)	30				20	15		10		
Rated power rate		kW/s	10.4	20.1	30.3	62.5	66	60	88	37.3	45.8	66.3
Applicable Encoder			Incremental encoder (10000 pulses)					-				
			Incremental /Absolute encoder(17 bits)									
Allowable radial load		N	68		245		392		490			686
Allowable thrust load		N	58		98		147		196			
Approx. mass		Kg (without brake)	0.3	0.5	0.8	1.2	2.3	4.5	5.1	6.8	8.5	
		Kg (with brake)	0.5	0.7	1.3	1.7	3.1	5.1	6.5	8.7	10.1	10
Brake specifications	Rated voltage		24 VDC +/-5%					24 VDC +/-10%				
	Holding brake moment of inertia J	$kg·m^2x10^{-4}$	0.002		0.018		0.075	0.25	0.33	1.35		
	Power consumption (at 20°C)	W	7		9		10	18	19	14	19	
	Current consumption (at 20°C)	A	0.3		0.36		0.42	0.74	0.81	0.59	0.79	
	Static friction torque	N.m (minimum)	0.29		1.27		2.45	4.9	7.8	4.9	13.7	
	Rise time for holding torque	ms (max.)	35		50		70	50		80	100	
	Release time	ms (max)	20		15		20	15		70	50	
Basic specifications	Rating		Continuous									
	Insulation grade		Type B					Type F				
	Ambient operating/ storage temperature		0 to +40°C/ -20 to 65°C					0 to +40°C/ -20 to 80°C				
	Ambient operating/ storage humidity		85% RH max. (non-condensing)									
	Vibration class		V-15									
	Insulation resistance		20 MΩ min. at 500 VDC between the power terminals and FG terminal									
	Enclosure		Totally-enclosed, self-cooling, IP65 (excluding shaft opening and lead wire ends)									
	Vibration resistance		Vibration acceleration 49 m/s²					Vibration acceleration 24.5 m/s²				
	Mounting		Flange-mounted									

Torque-speed charecteristics

R88M-G05030H/T (50 W)

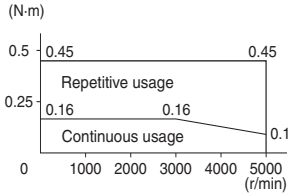

R88M-G10030H/T (100 W)

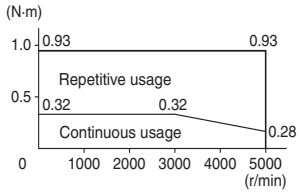

R88M-G20030H/T (200 W)

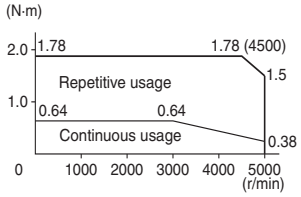

R88M-G40030H/T (400 W)

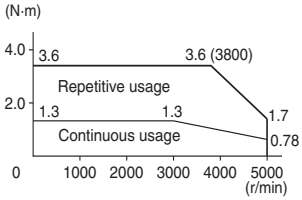

R88M-G75030H/T (750 W)

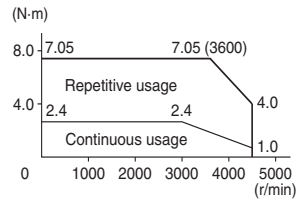

R88M-G1K030T (1 kW)

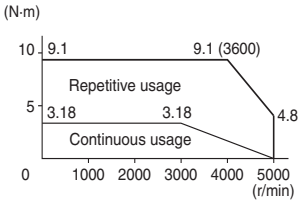

R88M-G1K530T (1.5 kW)

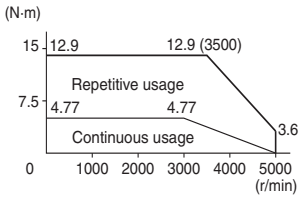

R88M-G1K020T (1 kW)

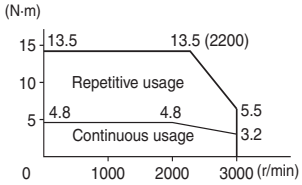

R88M-G1K520T (1.5 kW)

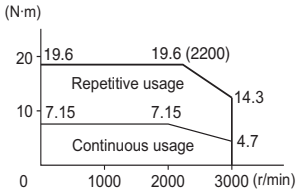

R88M-G90010T (900 W)

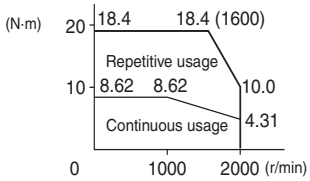

Flat servo motors 3000 r/min

Ratings and specifications

Applied voltage			230 V		
Servo motor model R88M-□			GP10030□	GP20030□	GP40030□
Rated output		W	100	200	400
Rated torque		N·m	0.32	0.64	1.3
Instantaneous peak torque		N·m	0.86	1.8	3.65
Rated current		A (rms)	1	1.6	2.5
Instantaneous max. current		A (rms)	3.1	4.9	7.5
Rated speed		min^{-1}	3000		
Max. speed		min^{-1}	5000		
Torque constant		N·m/A (rms)	0.34	0.42	0.54
Rotor moment of inertia (JM)		$kg·m^2x10^{-4}$	0.1	0.35	0.64
Allowable load moment of inertia (JL)		Multiple of (JM)	20		
Rated power rate		kW/s	10.2	11.5	25.5
Applicable encoder			Incremental (10000 pulses)		
			Incremental /Absolute encoder(17 bits)		
Allowable radial load		N	68	245	
Allowable thrust load		N	58	98	
Approx. mass		Kg (without brake)	0.7	1.3	1.8
		Kg (with brake)	0.9	2	2.5
Brake specifications	Rated voltage		24VDC +/-10%		
	Holding brake moment of inertia J	$kg·m^2x10^{-4}$	0.03	0.09	
	Power consumption (at 20°C)	W	7	10	
	Current consumption (at 20°C)	A	0.29	0.41	
	Static friction torque	N.m (minimum)	0.29	1.27	
	Rise time for holding torque	ms (max.)	50	60	
	Release time	ms (max)	15		
Basic specifications	Rating		Continuous		
	Insulation grade		Type B		
	Ambient operating/ storage temperature		0 to +40 °C/ -20 to 80°C		
	Ambient operating/ storage humidity		85% RH max. (non-condensing)		
	Vibration class		V-15		
	Insulation resistance		20 MΩ min. at 500 VDC between the power terminals and FG terminal		
	Enclosure		Totally-enclosed, self-cooling, IP65 (excluding shaft opening and lead wire ends)		
	Vibration resistance		Vibration acceleration 49 m/s2		
	Mounting		Flange-mounted		

Torque-speed charecteristics

R88M-GP10030H/T (100 W)

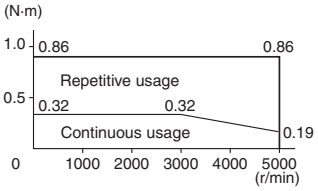

R88M-GP20030H/T (200 W)

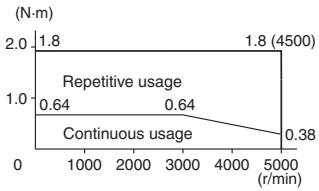

R88M-GP40030H/T (400 W)

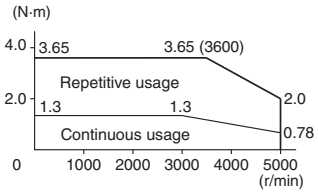

Dimensions

Servo motors

Cylindrical type 3000 r/min (230 V, 50-100 W)

Dimensions (mm)	Without brake	With brake	LN	Flange surface	Shaft end		Aprox. Mass (Kg)	
Model	LL	LL		D	S	B	Without brake	With brake
R88M-G05030□-□S2	72	102	26.5	30^{h7}	8^{h6}	3^{h9}	0.3	0.5
R88M-G10030□-□S2	92	122	46.5				0.5	0.7

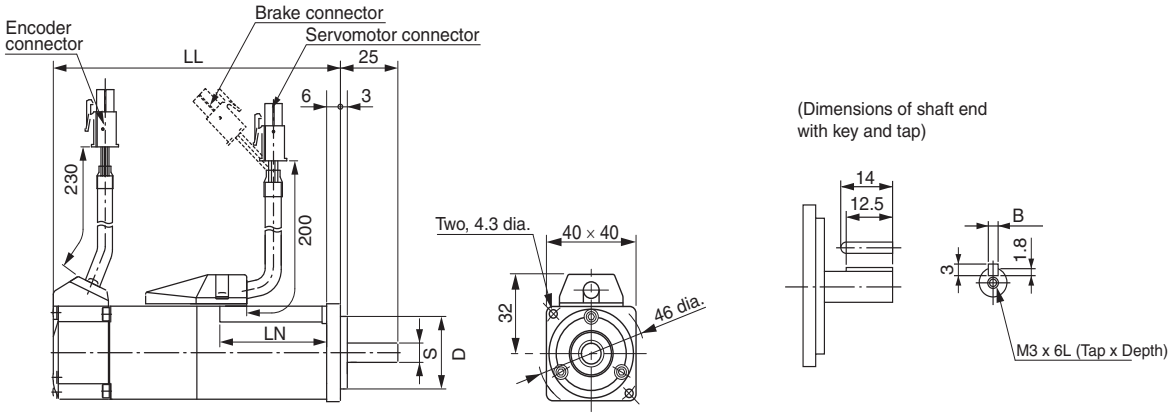

Cylindrical type 3000 r/min (230 V, 200-750 W)

Dimensions (mm)	Without brake	With brake	LR	KL1	Flange surface					Shaft end						Aprox. Mass (Kg)	
Model	LL	LL			D1	D2	C	G	Z	S	QK	B	H	T1	Tap x depth	Without brake	With brake
R88M-G20030□-□S2	79.5	116	30	43	70	50^{h7}	60	6.5	4.5	11^{h6}	18	4^{h9}	4	2.5	M4x8L	0.8	1.3
R88M-G40030□-□S2	99	135.5								14^{h6}	22.5	5^{h9}	5	3	M5x10L	1.2	1.7
R88M-G75030□-□S2	112.2	149.2	35	53	90	70^{h7}	80	8	6	19^{h6}	22	6^{h9}	6	3.5		2.3	3.1

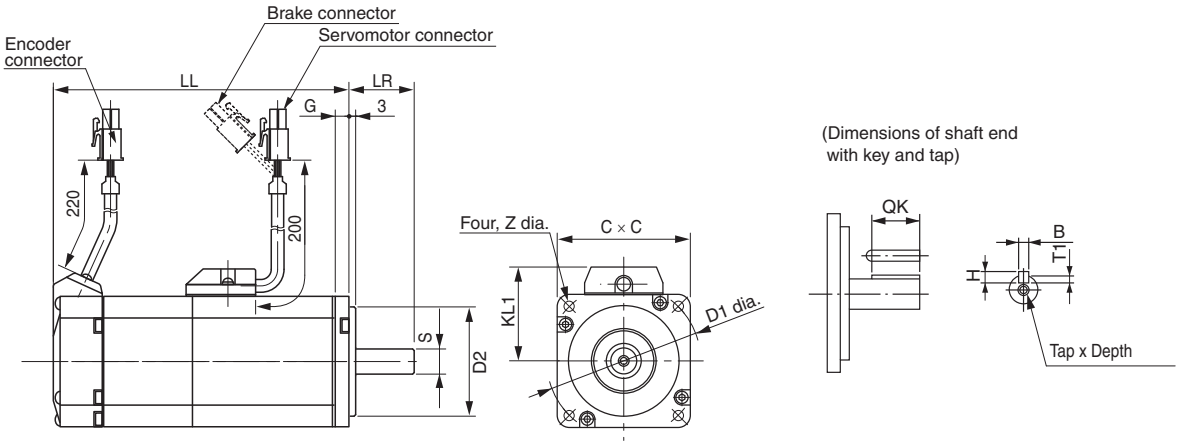

Cylindrical type 3000, 2000 and 1000 r/min (230 V, 900 kW - 1.5 kW)

Dimensions (mm)	Without brake	With brake	LR	KL1	Flange surface							Shaft end						Aprox. Mass (Kg)	
Model	LL	LL			D1	D2	D3	C	G	F	Z	S	QK	B	H	T1	Tap x depth	Without brake	With brake
R88M-G1K030T-□S2	175	200	55	98	100	80^{h7}	120	90	7	3	6.6	19^{h6}	42	6^{h9}	6	3.5	M5x12L	4.5	5.1
R88M-G1K530T-□S2	180	205		103	115	95^{h7}	135	100	10		9							5.1	6.5
R88M-G1K020T-□S2	150	175		118	145	110^{h7}	165	130	12	6		22^{h6}	41	8^{h9}	7	4		6.8	8.7
R88M-G1K520T-□S2	175	200																8.5	10.1
R88M-G90010T-□S2	175	200	70																10

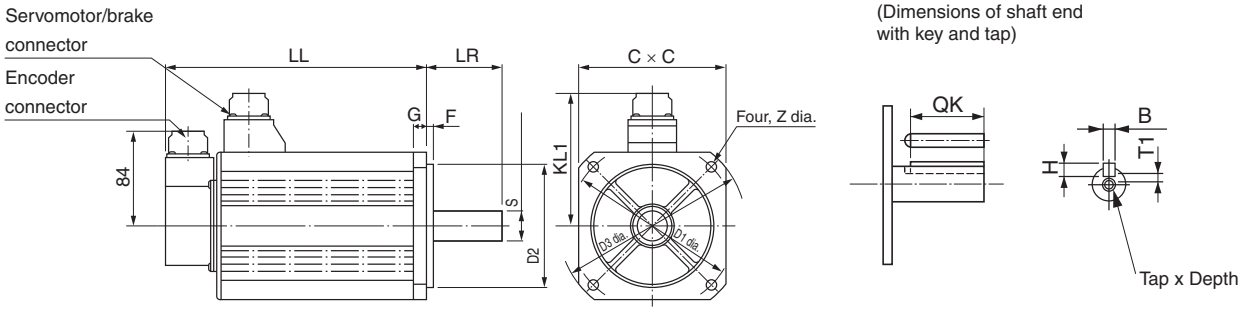

Flat type 3000 r/min (230 V, 100 W - 400 W)

Dimensions (mm)	Without brake	With brake	LR	KL1	Flange surface						Shaft end						Aprox. Mass (Kg)	
Model	LL	LL			D1	D2	C	F	G	Z	S	QK	B	H	T1	Tap x depth	Without brake	With brake
R88M-GP10030H-□S2	60.5	84.5	25	43	70	50^{h7}	60	3	7	4.5	8^{h6}	12.5	3^{h9}	3	1.8	M3x6L	0.7	0.9
R88M-GP10030T-□S2	87.5	111.5																
R88M-GP20030H-□S2	67.5	100	30	53	90	70^{h7}	80	5	8	5.5	11^{h6}	18	4^{h9}	4	2.5	M4x8L	1.3	2
R88M-GP20030T-□S2	94.5	127																
R88M-GP40030H-□S2	82.5	115									14^{h6}	22.5	5^{h9}	5	3.0	M5x10L	1.8	2.5
R88M-GP40030T-□S2	109.5	142																

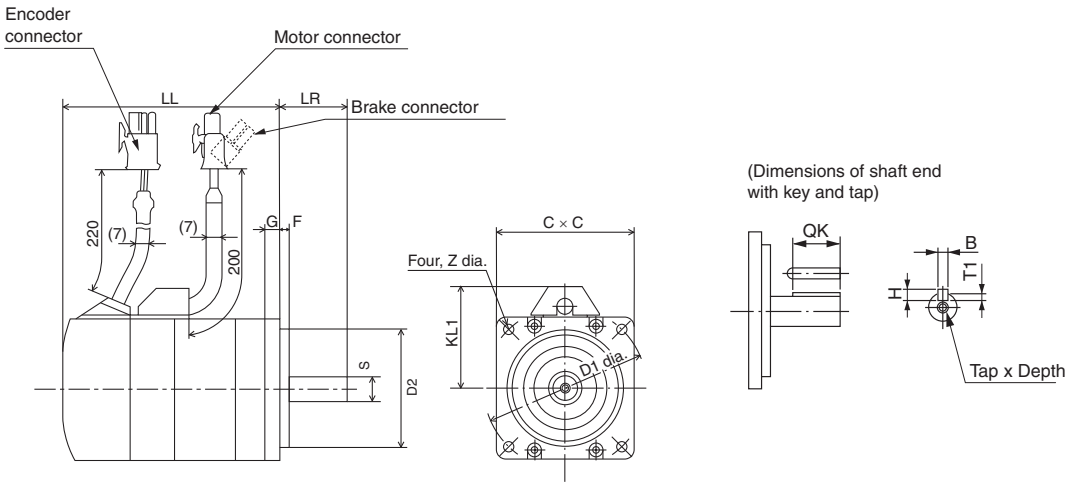

Installation

Single-phase, 230 VAC

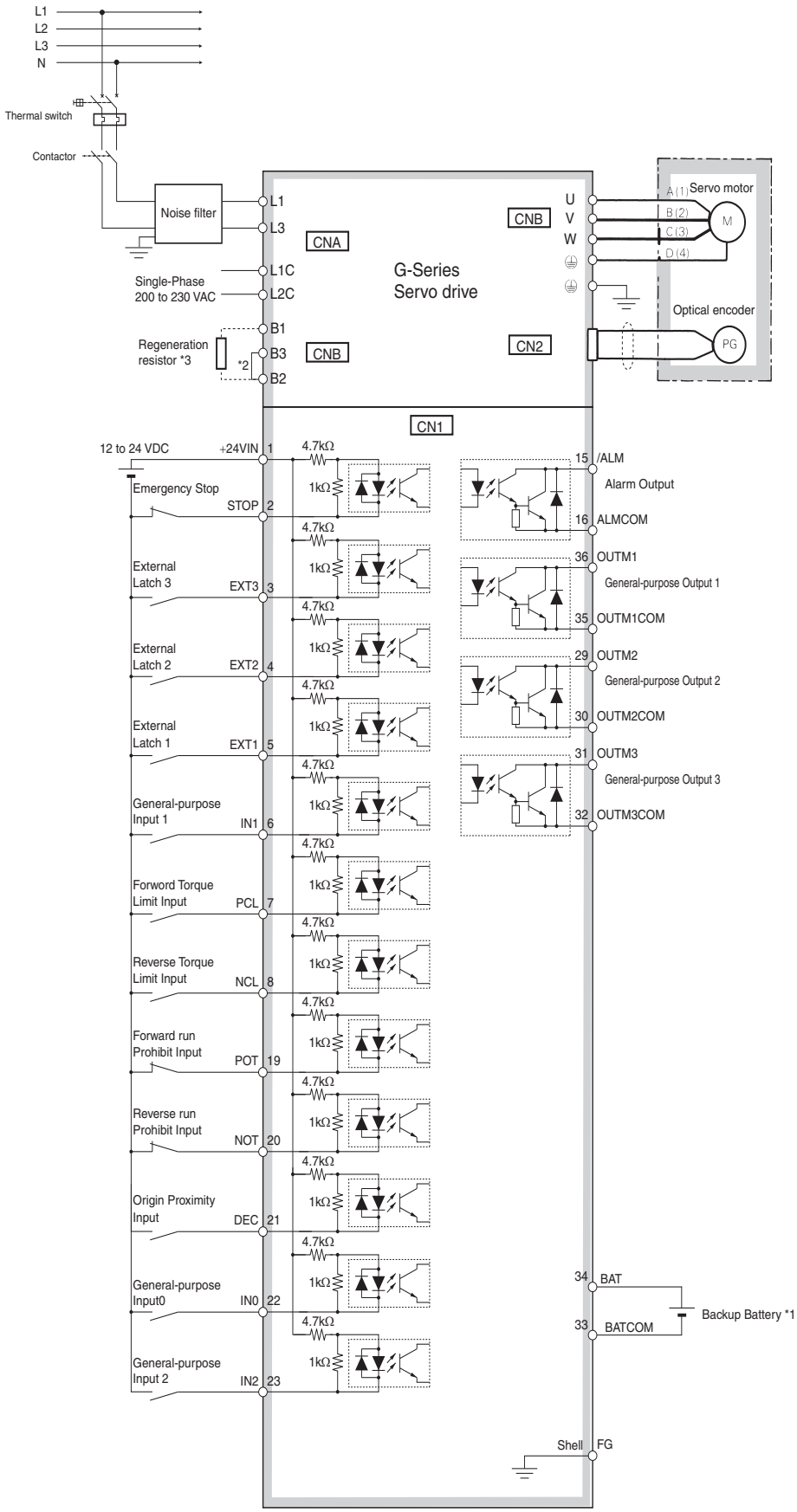

*1 Connect when using an absolute encoder. If a backup battery is connected, an encoder cable with a battery is not required.
*2 Connect B2-B3 for the models with a built-in regeneration resistor (models from 750 W).
*3 If the amount of regeneration is large, connect an external regeneration resistor to B1-B2. For the models from 750 W, disconnect B2-B3.

Ordering information

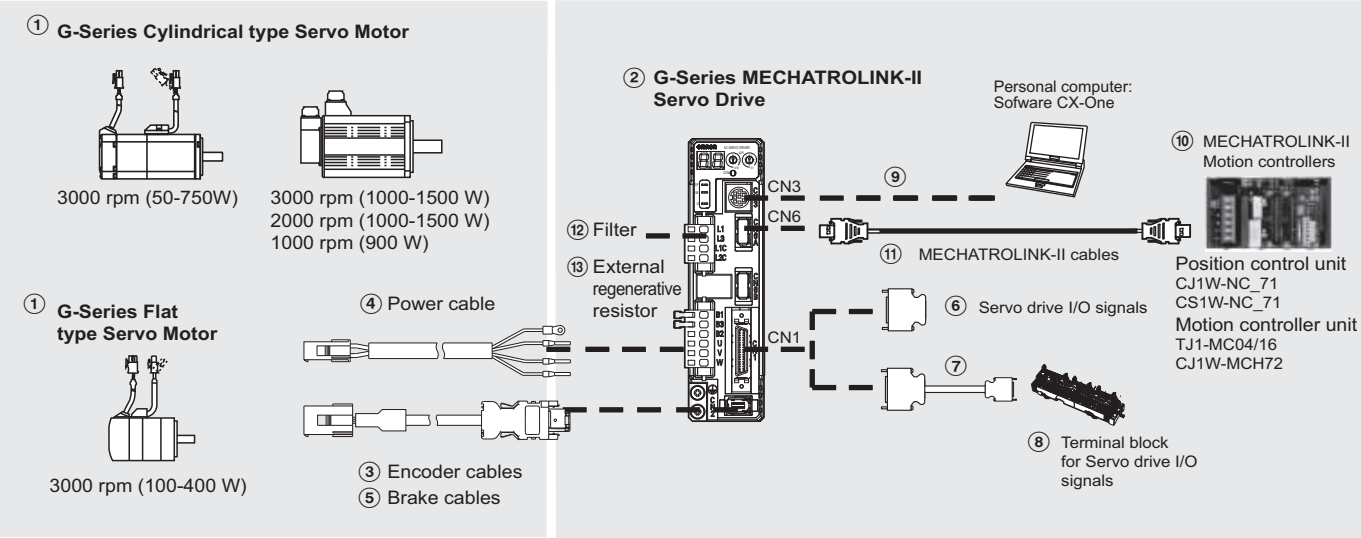

Note: The symbols ①②③④⑤... show the recommended sequence to select the components in a G-Series servo system

Servo drives

Symbol	Specifications		Servo drive model	① Compatible rotary servo motors	
				Cylindric type	Flat type
②	1 phase 200 VAC	100 W	R88D-GN01H-ML2	R88M-G05030□	R88M-GP10030□
				R88M-G10030□	
		200 W	R88D-GN02H-ML2	R88M-G20030□	R88M-GP20030□
		400 W	R88D-GN04H-ML2	R88M-G40030□	R88M-GP40030□
		750 W	R88D-GN08H-ML2	R88M-G75030□	-
		1.0 kW	R88D-GN10H-ML2	R88M-G1K020T□	-
		1.5 kW	R88D-GN15H-ML2	R88M-G90010T□	-
				R88M-G1K030T□	-
				R88M-G1K520T□	-
				R88M-G1K530T□	-

Control cables (for CN1)

Symbol	Name	Connect to		Model
⑥	I/O connector kit	Servo drive I/O signals	-	R88A-CNU01C
⑦	Terminal block cable		1 m	XW2Z-100J-B33
			2 m	XW2Z-200J-B33
⑧	Terminal block		-	XW2B-20G4
				XW2B-20G5
				XW2D-20G6

Computer cable (for CN3)

Symbol	Name		Model
⑨	Computer cable RS232	2 m	R88A-CCG002P2

MECHATROLINK-II Motion controllers

Symbol	Name	Model
⑩	Trajexia stand-alone motion controller	TJ1-MC04 (4 axes)
		TJ1-MC16 (16 axes)
	Trajexia-PLC motion controller	CJ1W-MCH72
	Position Controller Unit for CJ1 PLC	CJ1W-NCF71 (16 axes)
		CJ1W-NC471 (4 axes)
		CJ1W-NC271 (2 axes)
	Position Controller Unit for CS1 PLC	CS1W-NCF71 (16 axes)
		CS1W-NC471 (4 axes)
		CS1W-NC271 (2 axes)

Computer software

Specifications	Model
Configuration and monitoring software tool for servo drives and inverters. (CX-drive version 1.70 or higher)	CX-drive
Complete OMRON software package including CX-drive. (CX-One version 3.10 or higher)	CX-One

MECHATROLINK-II cables (for CN6)

Symbol	Specifications	Length	Model
⑪	MECHATROLINK-II Terminator resistor	-	JEPMC-W6022-E
	MECHATROLINK-II cables	0.5 m	JEPMC-W6003-A5-E
		1 m	JEPMC-W6003-01-E
		3 m	JEPMC-W6003-03-E
		5 m	JEPMC-W6003-05-E
		10 m	JEPMC-W6003-10-E
		20 m	JEPMC-W6003-20-E
		30 m	JEPMC-W6003-30-E

Footprint filters

Symbol	Applicable servodrive	Filter model	Rated current	Leak-age current	Rated voltage
⑫	R88D-GN01H□ R88D-GN02H□	R88A-FIK102-RE	2.4 A	3.5 mA	250 VAC single-phase
	R88D-GN04H□	R88A-FIK104-RE	4.1 A	3.5 mA	
	R88D-GN08H□	R88A-FIK107-RE	6.6 A	3.5 mA	
	R88D-GN10H□ R88D-GN15H□	R88A-FIK114-RE	14.2 A	3.5 mA	

External regenerative resistor

Symbol	Regenerative resistor unit model	Specifications
⑬	R88A-RR08050S	50 Ω, 80 W
	R88A-RR080100S	100 Ω, 80 W
	R88A-RR22047S	47 Ω, 220 W
	R88A-RR50020S	20 Ω, 500 W

Cylindrical servo motors 3000/2000/1000 r/min (50 - 1.5 kW)

Symbol	Specifications						Servo motor model	Compatible servo drives ②
	Voltage	Encoder and design	Speed	Design	Rated torque	Capacity		
① (50-750 W)	230 V	Incremental encoder (10000 pulses) Straight shaft with key & tap	3000 min^{-1}	Without brake	0.16 Nm	50 W	R88M-G05030H-S2	R88D-GN01H-ML2
					0.32 Nm	100 W	R88M-G10030H-S2	R88D-GN01H-ML2
					0.64 Nm	200 W	R88M-G20030H-S2	R88D-GN02H-ML2
					1.3 Nm	400 W	R88M-G40030H-S2	R88D-GN04H-ML2
					2.4 Nm	750 W	R88M-G75030H-S2	R88D-GN08H-ML2
				With brake	0.16 Nm	50 W	R88M-G05030H-BS2	R88D-GN01H-ML2
					0.32 Nm	100 W	R88M-G10030H-BS2	R88D-GN01H-ML2
					0.64 Nm	200 W	R88M-G20030H-BS2	R88D-GN02H-ML2
					1.3 Nm	400 W	R88M-G40030H-BS2	R88D-GN04H-ML2
					2.4 Nm	750 W	R88M-G75030H-BS2	R88D-GN08H-ML2
		Absolute/ incremental encoder (17 bits) Straight shaft with key & tap		Without brake	0.16 Nm	50 W	R88M-G05030T-S2	R88D-GN01H-ML2
					0.32 Nm	100 W	R88M-G10030T-S2	R88D-GN01H-ML2
					0.64 Nm	200 W	R88M-G20030T-S2	R88D-GN02H-ML2
					1.3 Nm	400 W	R88M-G40030T-S2	R88D-GN04H-ML2
					2.4 Nm	750 W	R88M-G75030T-S2	R88D-GN08H-ML2
					3.18 Nm	1 kW	R88M-G1K030T-S2	R88D-GN15H-ML2
					4.77 Nm	1.5 kW	R88M-G1K530T-S2	R88D-GN15H-ML2
(900-1500 W)				With brake	0.16 Nm	50 W	R88M-G05030T-BS2	R88D-GN01H-ML2
					0.32 Nm	100 W	R88M-G10030T-BS2	R88D-GN01H-ML2
					0.64 Nm	200 W	R88M-G20030T-BS2	R88D-GN02H-ML2
					1.3 Nm	400 W	R88M-G40030T-BS2	R88D-GN04H-ML2
					2.4 Nm	750 W	R88M-G75030T-BS2	R88D-GN08H-ML2
					3.18 Nm	1 kW	R88M-G1K030T-BS2	R88D-GN15H-ML2
					4.77 Nm	1.5 kW	R88M-G1K530T-BS2	R88D-GN15H-ML2
			2000 min^{-1}	Without brake	4.8 Nm	1 kW	R88M-G1K020T-S2	R88D-GN10H-ML2
					7.15 Nm	1.5 kW	R88M-G1K520T-S2	R88D-GN15H-ML2
				With brake	4.8 N m	1 kW	R88M-G1K020T-BS2	R88D-GN10H-ML2
					7.15 Nm	1.5 kW	R88M-G1K520T-BS2	R88D-GN15H-ML2
			1000 min^{-1}	Without brake	8.62 Nm	900 W	R88M-G90010T-S2	R88D-GN15H-ML2
				With brake			R88M-G90010T-BS2	R88D-GN15H-ML2

Flat type servo motors 3000 r/min (100 - 400 W)

Symbol	Specifications					Servo motor model	Compatible servo drives ②
	Voltage	Encoder and design		Rated torque	Capacity		
①	230 V	Incremental encoder (10000 pulses) Straight shaft with key & tap	Without brake	0.32 Nm	100 W	R88M-GP10030H-S2	R88D-GN01H-ML2
				0.64 Nm	200 W	R88M-GP20030H-S2	R88D-GN02H-ML2
				1.3 Nm	400 W	R88M-GP40030H-S2	R88D-GN04H-ML2
			With brake	0.32 Nm	100 W	R88M-GP10030H-BS2	R88D-GN01H-ML2
				0.64 Nm	200 W	R88M-GP20030H-BS2	R88D-GN02H-ML2
				1.3 Nm	400 W	R88M-GP40030H-BS2	R88D-GN04H-ML2
		Absolute/ incremental encoder (17 bits) Straight shaft with key & tap	Without brake	0.32 Nm	100 W	R88M-GP10030T-S2	R88D-GN01H-ML2
				0.64 Nm	200 W	R88M-GP20030T-S2	R88D-GN02H-ML2
				1.3 Nm	400 W	R88M-GP40030T-S2	R88D-GN04H-ML2
			With brake	0.32 Nm	100 W	R88M-GP10030T-BS2	R88D-GN01H-ML2
				0.64 Nm	200 W	R88M-GP20030T-BS2	R88D-GN02H-ML2
				1.3 Nm	400 W	R88M-GP40030T-BS2	R88D-GN04H-ML2

Encoder Cables

Symbol	Specifications		Model	Appearance
③	Encoder cable for absolute encoder (50-750 W) R88M-G(050/100/200/400/750)30T-□ R88M-GP(100/200/400)30T-□	1.5 m	R88A-CRGA001-5CR-E	
		3 m	R88A-CRGA003CR-E	
		5 m	R88A-CRGA005CR-E	
		10 m	R88A-CRGA010CR-E	
		15 m	R88A-CRGA015CR-E	
		20 m	R88A-CRGA020CR-E	
	Encoder cable for Incremental encoder (50-750 W) R88M-G(050/100/200/400/750)30H-□ R88M-GP(100/200/400)30H-□	1.5 m	R88A-CRGB001-5CR-E	
		3 m	R88A-CRGB003CR-E	
		5 m	R88A-CRGB005CR-E	
		10 m	R88A-CRGB010CR-E	
		15 m	R88A-CRGB015CR-E	
		20 m	R88A-CRGB020CR-E	
	Encoder cable for Absolute encoder (900-1500 W) R88M-G(1K0/1K5)30T-□ R88M-G(1K0/1K5)20T-□ R88M-G90010T-□	1.5 m	R88A-CRGC001-5NR-E	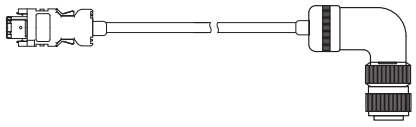
		3 m	R88A-CRGC003NR-E	
		5 m	R88A-CRGC005NR-E	
		10 m	R88A-CRGC010NR-E	
		15 m	R88A-CRGC015NR-E	
		20 m	R88A-CRGC020NR-E	

Absolute Encoder Battery cable

Symbol	Specifications			Model	Appearance
③	Absolute Encoder battery cable	Battery not included	0.3 m	R88A-CRGD0R3C	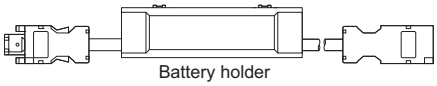 Battery holder
		One R88A-BAT01G Battery included	0.3 m	R88A-CRGD0R3C-BS	
	Absolute Encoder backup battery 2,000 mA.h 3.6V	-	-	R88A-BAT01G	

Note: The absolute encoder battery cable is only an extension and must be used with an absolute encoder cable.

Power cables

Symbol	Specifications		Model	Appearance
④	For servomotors from 50 to 750W R88M-G(050/100/200/400/750)30□ R88M-GP(100/200/400)30□ For servomotors with brake, a separate cable (R88A-CAGA□BR-E) is needed	1.5 m	R88A-CAGA001-5SR-E	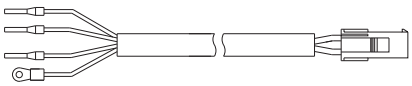
		3 m	R88A-CAGA003SR-E	
		5 m	R88A-CAGA005SR-E	
		10 m	R88A-CAGA010SR-E	
		15 m	R88A-CAGA015SR-E	
		20 m	R88A-CAGA020SR-E	
	For servomotors from 900 to 1.5 kW without brake R88M-G(1K0/1K5)30T-S2 R88M-G(1K0/1K5)20T-S2 R88M-G90010T-S2	1.5 m	R88A-CAGB001-5SR-E	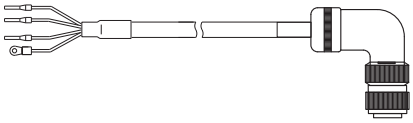
		3 m	R88A-CAGB003SR-E	
		5 m	R88A-CAGB005SR-E	
		10 m	R88A-CAGB010SR-E	
		15 m	R88A-CAGB015SR-E	
		20 m	R88A-CAGB020SR-E	
	For servomotors from 900 to 1.5 kW with brake R88M-G(1K0/1K5)30T-BS2 R88M-G(1K0/1K5)20T-BS2 R88M-G90010T-BS2	1.5 m	R88A-CAGB001-5BR-E	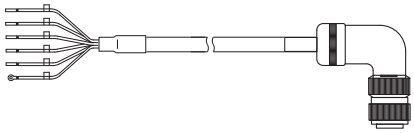
		3 m	R88A-CAGB003BR-E	
		5 m	R88A-CAGB005BR-E	
		10 m	R88A-CAGB010BR-E	
		15 m	R88A-CAGB015BR-E	
		20 m	R88A-CAGB020BR-E	

Brake cable (for 50-750W servomotors)

Symbol	Specifications		Model	Appearance
⑤	Brake cable only. For servomotors from 50 to 750W with brake R88M-G(050/100/200/400/750)30□-BS2, R88M-GP(100/200/400)30□-BS2	1.5 m	R88A-CAGA001-5BR-E	
		3 m	R88A-CAGA003BR-E	
		5 m	R88A-CAGA005BR-E	
		10 m	R88A-CAGA010BR-E	
		15 m	R88A-CAGA015BR-E	
		20 m	R88A-CAGA020BR-E	

Connectors for power, encoder and brake cables

Specifications		Applicable Servomotor	Model
Connectors for power cables	Motor side	R88M-G(050/100/200/400/750)30□, R88M-GP(100/200/400)30□	R88A-CNG01A
	Motor side	R88M-G(1K0/1K5)30□-S2, R88M-G(1K0/1K5)20□-S2, R88M-G90010□-S2 (without brake)	MS3108E20-4S
	Motor side	R88M-G(1K0/1K5)30□-BS2, R88M-G(1K0/1K5)20□-BS2, R88M-G90010□-BS2 (with brake)	MS3108E20-18S
Connectors for encoder cables	Drive side (CN2)	-	R88A-CNW01R
	Motor side	R88M-G(050/100/200/400/750)30T-□, R88M-GP(100/200/400)30T-□ (Absolute encoder)	R88A-CNG01R
	Motor side	R88M-G(050/100/200/400/750)30H-□, R88M-GP(100/200/400)30H-□ (Incremental encoder)	R88A-CNG02R
	Motor side	R88M-G(1K0/1K5)30T-□, R88M-G(1K0/1K5)20T-□, R88M-G90010T-□	MS3108E20-29S
Connector for brake cable	Motor side	R88M-G(050/100/200/400/750)30□-BS2, R88M-GP(100/200/400)30□-BS2	R88A-CNG01B

ALL DIMENSIONS SHOWN ARE IN MILLIMETERS.
To convert millimeters into inches, multiply by 0.03937. To convert grams into ounces, multiply by 0.03527.

In the interest of product improvement, specifications are subject to change without notice.

OMRON EUROPE B.V. Wegalaan 67-69, NL-2132 JD, Hoofddorp, The Netherlands. Tel: +31 (0) 23 568 13 00 Fax: +31 (0) 23 568 13 88 www.industrial.omron.eu

Austria
Tel: +43 (0) 2236 377 800
www.industrial.omron.at

Belgium
Tel: +32 (0) 2 466 24 80
www.industrial.omron.be

Czech Republic
Tel: +420 234 602 602
www.industrial.omron.cz

Denmark
Tel: +45 43 44 00 11
www.industrial.omron.dk

Finland
Tel: +358 (0) 207 464 200
www.industrial.omron.fi

France
Tel: +33 (0) 1 56 63 70 00
www.industrial.omron.fr

Germany
Tel: +49 (0) 2173 680 00
www.industrial.omron.de

Hungary
Tel: +36 1 399 30 50
www.industrial.omron.hu

Italy
Tel: +39 02 326 81
www.industrial.omron.it

Netherlands
Tel: +31 (0) 23 568 11 00
www.industrial.omron.nl

Norway
Tel: +47 (0) 22 65 75 00
www.industrial.omron.no

Poland
Tel: +48 (0) 22 645 78 60
www.industrial.omron.pl

Portugal
Tel: +351 21 942 94 00
www.industrial.omron.pt

Russia
Tel: +7 495 648 94 50
www.industrial.omron.ru

South-Africa
Tel: +27 (0)11 579 2600
www.industrial.omron.co.za

Spain
Tel: +34 913 777 900
www.industrial.omron.es

Sweden
Tel: +46 (0) 8 632 35 00
www.industrial.omron.se

Switzerland
Tel: +41 (0) 41 748 13 13
www.industrial.omron.ch

Turkey
Tel: +90 216 474 00 40
www.industrial.omron.com.tr

United Kingdom
Tel: +44 (0) 870 752 08 61
www.industrial.omron.co.uk

More Omron representatives
www.industrial.omron.eu

Automation Systems
• Programmable logic controllers (PLC) • Human machine interfaces (HMI) • Remote I/O
• Industrial PC's • Software

Motion & Drives
• Motion controllers • Servo systems • Inverters

Control Components
• Temperature controllers • Power supplies • Timers • Counters • Programmable relays
• Digital panel indicators • Electromechanical relays • Monitoring products • Solid-state relays
• Limit switches • Pushbutton switches • Low voltage switch gear

Sensing & Safety
• Photoelectric sensors • Inductive sensors • Capacitive & pressure sensors
• Cable connectors • Displacement & width-measuring sensors • Vision systems
• Safety networks • Safety sensors • Safety units/relay units • Safety door/guard lock switches

KPP_G-Series_EN_INT01

Although we strive for perfection, Omron Europe BV and/or its subsidiary and affiliated companies do not warrant or make any representations regarding the correctness or completeness of the information described in this document. We reserve the right to make any changes at any time without prior notice.

Компания «ЭлектроПласт» предлагает заключение долгосрочных отношений при поставках импортных электронных компонентов на взаимовыгодных условиях!

Наши преимущества:

- Оперативные поставки широкого спектра электронных компонентов отечественного и импортного производства напрямую от производителей и с крупнейших мировых складов;
- Поставка более 17-ти миллионов наименований электронных компонентов;
- Поставка сложных, дефицитных, либо снятых с производства позиций;
- Оперативные сроки поставки под заказ (от 5 рабочих дней);
- Экспресс доставка в любую точку России;
- Техническая поддержка проекта, помощь в подборе аналогов, поставка прототипов;
- Система менеджмента качества сертифицирована по Международному стандарту ISO 9001;
- Лицензия ФСБ на осуществление работ с использованием сведений, составляющих государственную тайну;
- Поставка специализированных компонентов (Xilinx, Altera, Analog Devices, Intersil, Interpoint, Microsemi, Aeroflex, Peregrine, Syfer, Eurofarad, Texas Instrument, Miteq, Cobham, E2V, MA-COM, Hittite, Mini-Circuits,General Dynamics и др.);

Помимо этого, одним из направлений компании «ЭлектроПласт» является направление «Источники питания». Мы предлагаем Вам помощь Конструкторского отдела:

- Подбор оптимального решения, техническое обоснование при выборе компонента;
- Подбор аналогов;
- Консультации по применению компонента;
- Поставка образцов и прототипов;
- Техническая поддержка проекта;
- Защита от снятия компонента с производства.

Как с нами связаться

Телефон: 8 (812) 309 58 32 (многоканальный)
Факс: 8 (812) 320-02-42
Электронная почта: org@eplast1.ru
Адрес: 198099, г. Санкт-Петербург, ул. Калинина, дом 2, корпус 4, литера А.