THIS DRAWING IS UNPUBLISHED. RELEASED FOR PUBLICATION 20
© COPYRIGHT 20 BY - ALL RIGHTS RESERVED.

LOC	DIST
GP	00

REVISIONS

P	LTR	DESCRIPTION	DATE	DWN	APVD
	F3	REVISED PER ECO-18-008086	24MAY2018	IT	SH

1. MATERIAL:
   CAGE - 0.25mm THICK NICKEL SILVER ALLOY
   HEATSINK - ALUMINUM
   HEATSINK CLIP - STAINLESS STEEL
   EMI SPRING(S) - COPPER ALLOY

2. FINISH:
   HEATSINK - ELECTROLESS NICKEL
   HEATSINK CLIP - PASSIVATE
   EMI SPRING(S) - 0.8um MIN MATTE TIN OVER 0.8um MIN NICKEL, NON-PLATED EDGES PERMISSIBLE.

3. MATES WITH SFP MSA COMPLIANT TRANSCEIVERS.

4. PADS AND VIAS CHASSIS GROUND.

5. DATUM AND BASIC DIMENSION ESTABLISHED BY CUSTOMER.

6. MINIMUM PC BOARD THICKNESS:
   SINGLE SIDED = 1.50mm
   DOUBLE SIDED = 3.00mm

7. REFERENCE APPLICATION SPEC. 114-13120, HOLE A, FOR RECOMMENDED DRILL HOLE DIAMETER AND PLATING THICKNESS.

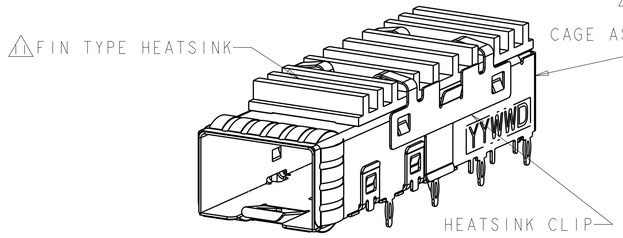

2007464-5

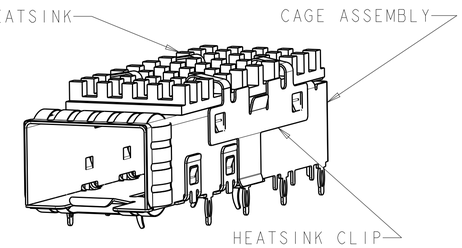

2007464-1

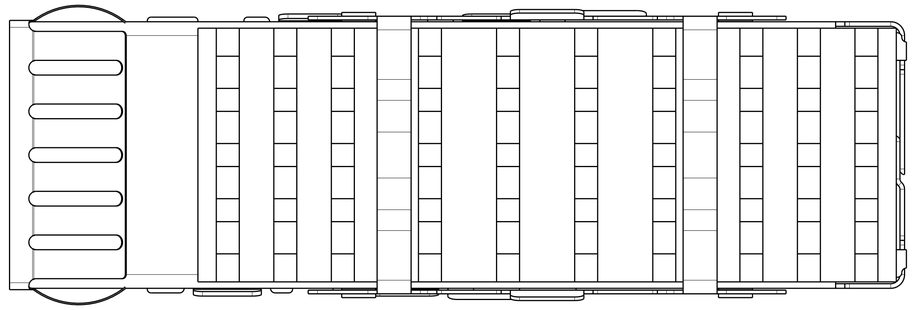

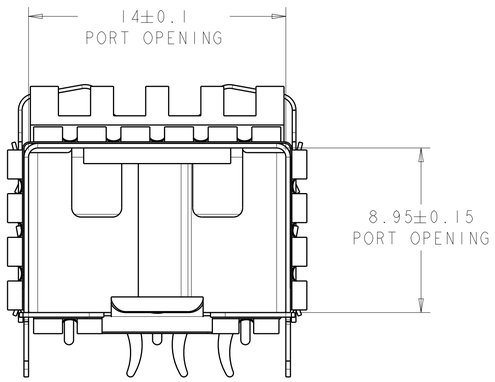

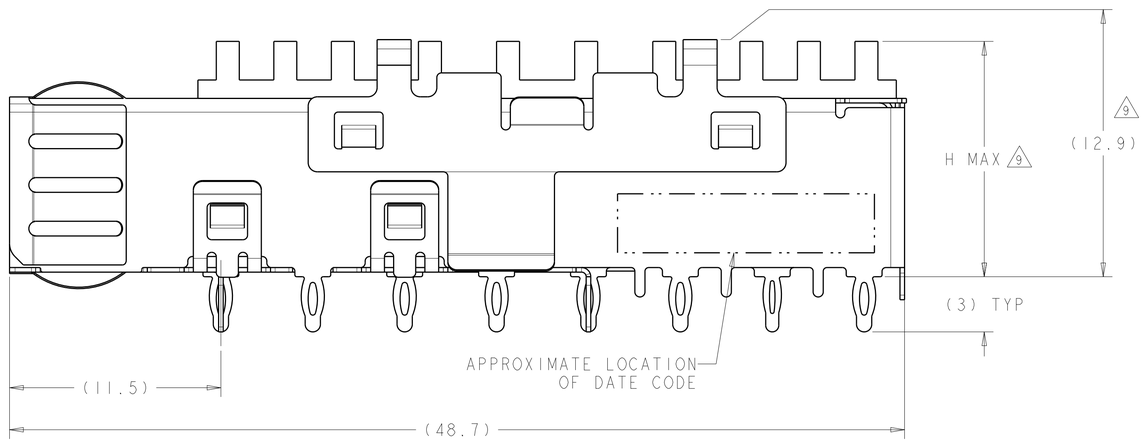

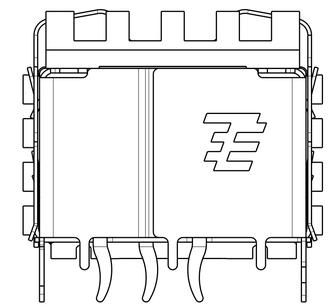

8. REFERENCE APPLICATION SPEC. 114-13120, HOLE C, FOR RECOMMENDED DRILL HOLE DIAMETER AND PLATING THICKNESS.

9. DIMENSION APPLIES PRIOR TO INSERTION OF SFP MODULE.

10. CAGE ASSEMBLY, HEATSINK CLIP AND HEATSINK SHIPPED ASSEMBLED.

11. HEAT SINK REFERENCE PART NUMBERS:
    1829903-2 = 4.2 HIGH - PCI,PIN TYPE
    1829904-2 = 6.5 HIGH - SAN,PIN TYPE
    1829905-2 = 13.5 HIGH - NETWORKING,PIN TYPE
    2170426-4 = 4.2 HIGH - PCI,PIN TYPE
    2170427-4 = 6.5 HIGH - SAN,PIN TYPE
    2170428-4 = 13.5 HIGH - NETWORKING,PIN TYPE

12. REMOVED

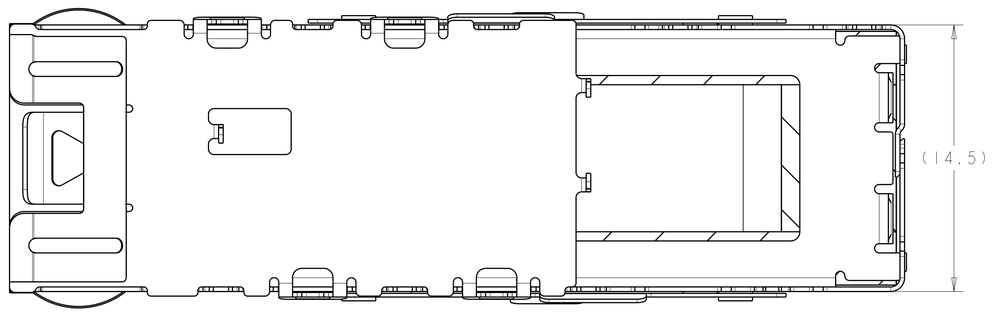

DESCRIPTION	H MAX	APPLICATION	PART NUMBER
W/O INSULATING TAPE	13.5	PCI	2007464-9
W/ INSULATING TAPE	22.8	NETWORKING	2007464-8
W/O INSULATING TAPE	22.8	NETWORKING	2007464-7
W/O INSULATING TAPE	15.8	SAN	2007464-6
W/O INSULATING TAPE	13.5	PCI	2007464-5
W/ INSULATING TAPE	22.8	NETWORKING	2007464-4
W/O INSULATING TAPE	22.8	NETWORKING	2007464-3
W/O INSULATING TAPE	15.8	SAN	2007464-2
W/O INSULATING TAPE	13.5	PCI	2007464-1

THIS DRAWING IS A CONTROLLED DOCUMENT.

DIMENSIONS: mm

TOLERANCES UNLESS OTHERWISE SPECIFIED:
0 PLC ±0.1
1 PLC ±0.1
2 PLC ±0.1
3 PLC ±0.05
4 PLC ±0.05
ANGLES ±

MATERIAL 1

FINISH 2

DWN Z.M.REAM 20NOV2007
CHK M.R.SCHMITT 20NOV2007
APVD R.H.WERTZ 20NOV2007
PRODUCT SPEC 108-2364
APPLICATION SPEC 114-13120
WEIGHT -

TE Connectivity

NAME SFP+ 1X1 CAGE ASSEMBLY, PRESS-FIT PRESS-FIT, EMI SPRINGS WITH HEATSINK

SIZE A1 | CAGE CODE 00779 | DRAWING NO C-2007464 | RESTRICTED TO -

Customer Drawing | SCALE 6:1 | SHEET 1 OF 4 | REV F3

THIS DRAWING IS UNPUBLISHED. RELEASED FOR PUBLICATION 20
© COPYRIGHT 20 BY - ALL RIGHTS RESERVED.

LOC	DIST
GP	00

REVISIONS

P	LTR	DESCRIPTION	DATE	DWN	APVD
	-	SEE SHEET 1	-	-	-

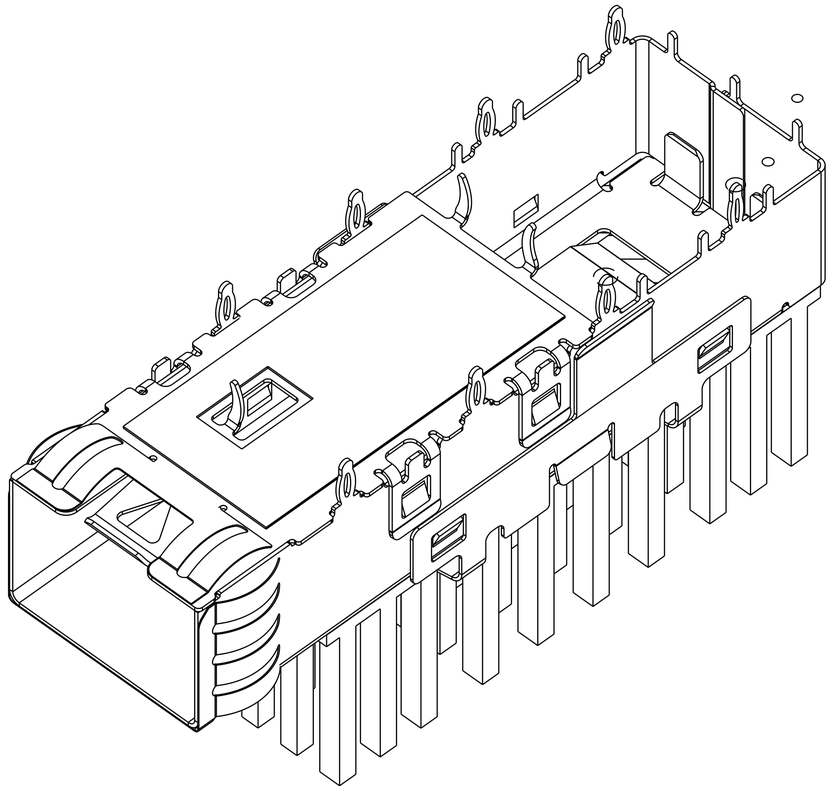

2007464-4 AS SHOWN WITH INSULATING TAPE,PIN TYPE HEAT SINK
2007464-1,2,3 WITHOUT INSULATING TAPE,TAPE,PIN TYPE HEAT SINK

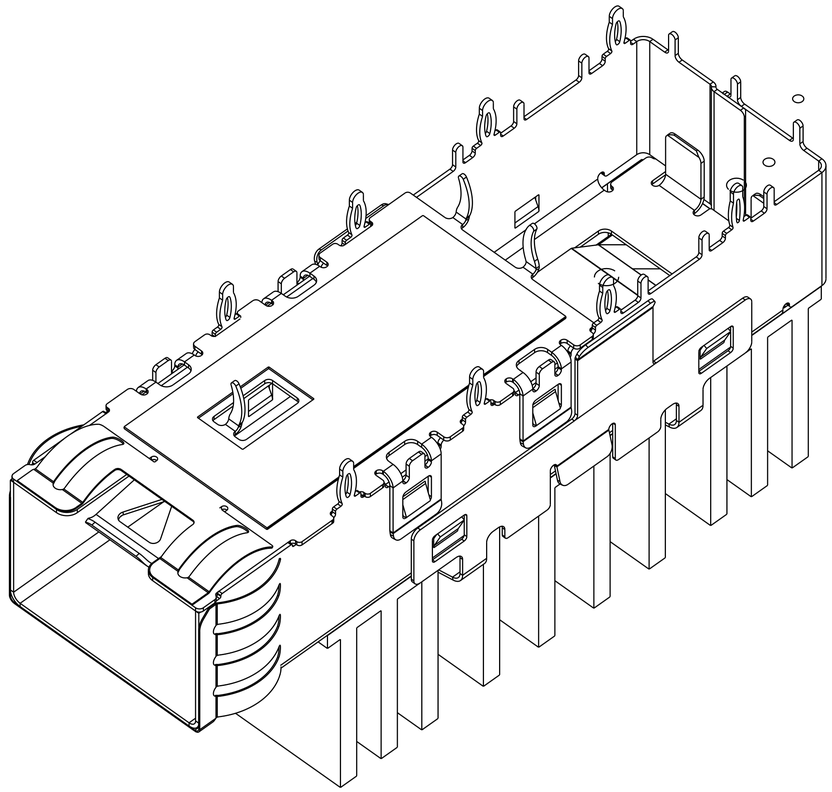

2007464-8 AS SHOWN WITH INSULATING TAPE,WITH FIN TYPE HEAT SINK
2007464-5,6,7 WITHOUT INSULATING TAPE,WITH FIN TYPE HEAT SINK

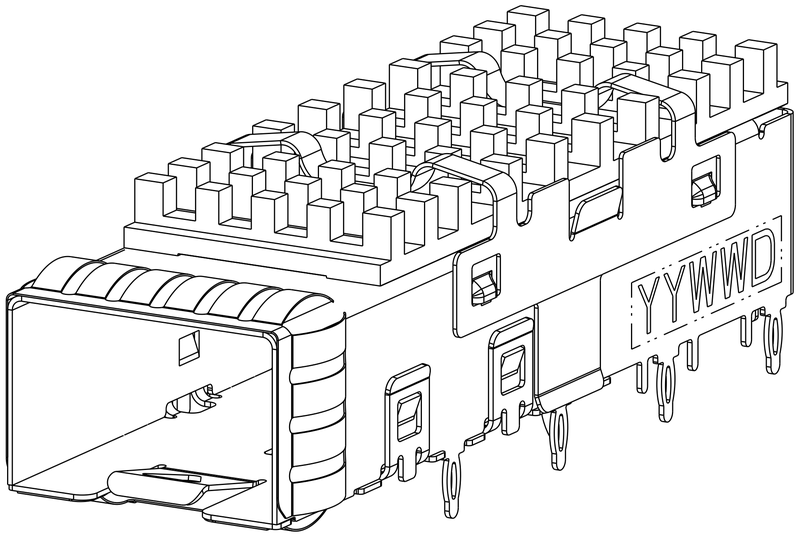

2007464-9 AS SHOWN

THIS DRAWING IS A CONTROLLED DOCUMENT.

DIMENSIONS: mm

TOLERANCES UNLESS OTHERWISE SPECIFIED:
0 PLC ±0.1
1 PLC ±0.1
2 PLC ±0.1
3 PLC ±0.05
4 PLC ±0.05
ANGLES ±-

MATERIAL
FINISH

DWN Z.M.REAM 20NOV2007
CHK M.R.SCHMITT 20NOV2007
APVD R.H.WERTZ 20NOV2007
PRODUCT SPEC 108-2364
APPLICATION SPEC 114-13120
WEIGHT -

TE Connectivity

NAME SFP+ 1X1 CAGE ASSEMBLY, PRESS-FIT PRESS-FIT, EMI SPRINGS WITH HEATSINK

SIZE	CAGE CODE	DRAWING NO	RESTRICTED TO
A1	00779	C-2007464	-

Customer Drawing

SCALE	SHEET	OF	REV
2	2	4	F3

4805 (3/11)

THIS DRAWING IS UNPUBLISHED. RELEASED FOR PUBLICATION 20
© COPYRIGHT 20 BY - ALL RIGHTS RESERVED.

LOC	DIST
GP	00

REVISIONS

P	LTR	DESCRIPTION	DATE	DWN	APVD
	-	SEE SHEET 1	-	-	-

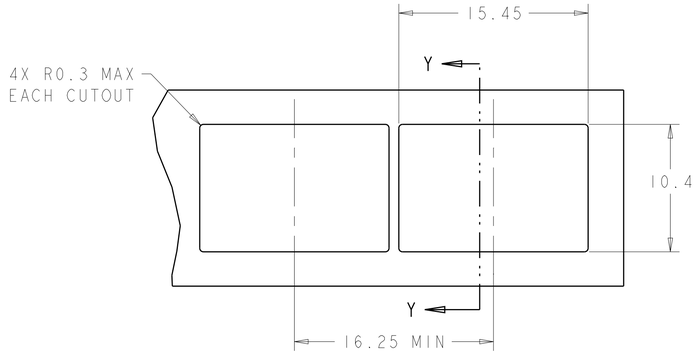

RECOMMENDED BEZEL CUTOUT
SCALE 4:1

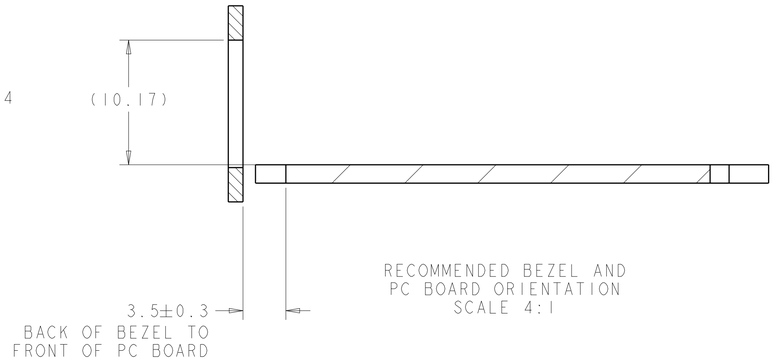

RECOMMENDED BEZEL AND
PC BOARD ORIENTATION
SCALE 4:1

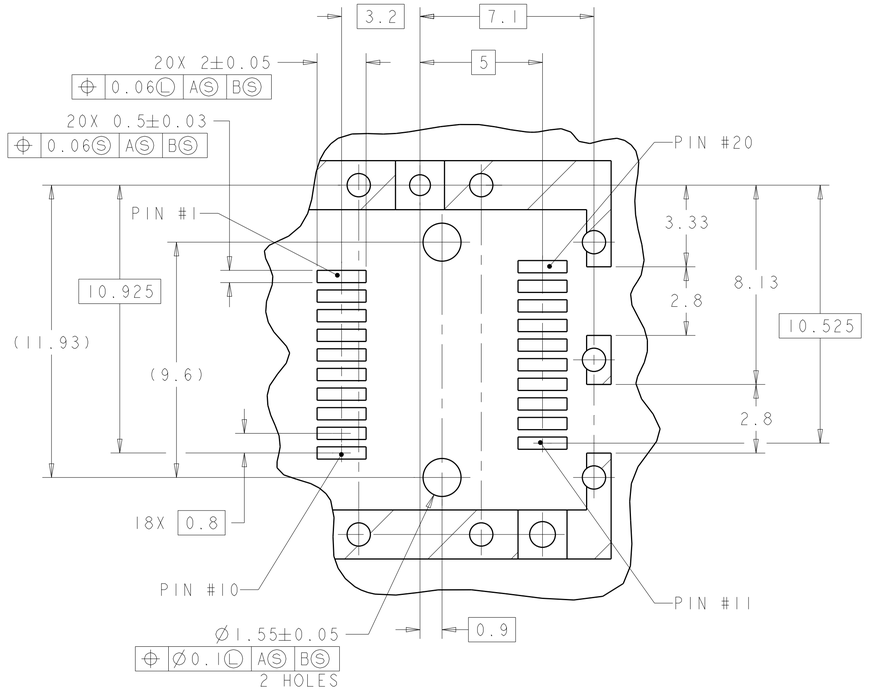

DETAIL A
SCALE 8:1

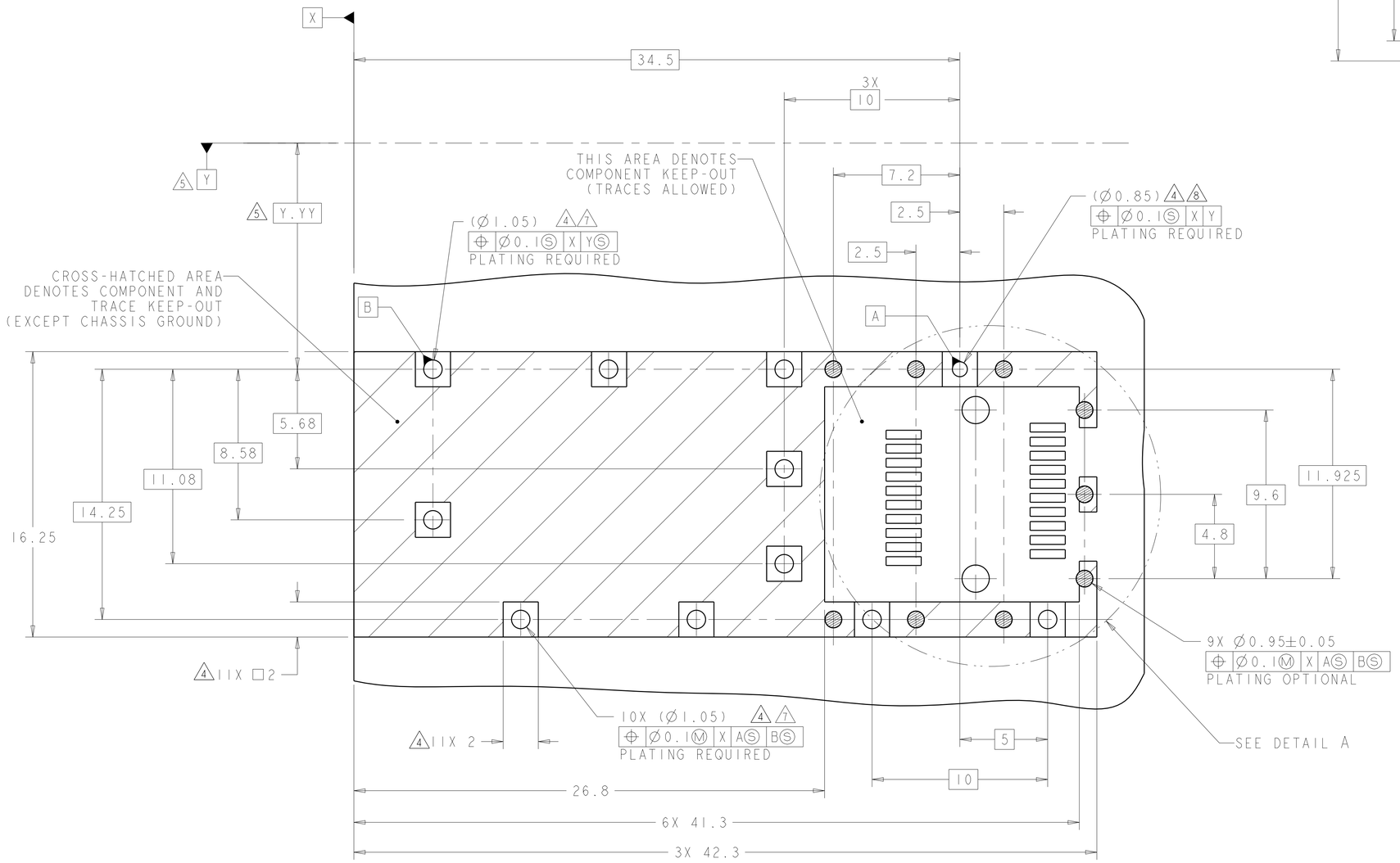

RECOMMENDED PCB LAYOUT
SCALE 7:1

THIS DRAWING IS A CONTROLLED DOCUMENT.

DIMENSIONS: mm

TOLERANCES UNLESS OTHERWISE SPECIFIED:
0 PLC ±0.1
1 PLC ±0.1
2 PLC ±0.1
3 PLC ±0.05
4 PLC ±0.05
ANGLES ±-

MATERIAL
FINISH

DWN Z.M.REAM 20NOV2007
CHK M.R.SCHMITT 20NOV2007
APVD R.H.WERTZ 20NOV2007
PRODUCT SPEC 108-2364
APPLICATION SPEC 114-13120
WEIGHT -

TE Connectivity

NAME SFP+ 1X1 CAGE ASSEMBLY, PRESS-FIT
PRESS-FIT, EMI SPRINGS
WITH HEATSINK

SIZE	CAGE CODE	DRAWING NO	RESTRICTED TO
A1	00779	C-2007464	-

Customer Drawing

SCALE	SHEET	OF	REV
2	3	4	F3

4805 (3/11)

THIS DRAWING IS UNPUBLISHED. RELEASED FOR PUBLICATION 20
© COPYRIGHT 20 BY - ALL RIGHTS RESERVED.

LOC	DIST
GP	00

REVISIONS

P	LTR	DESCRIPTION	DATE	DWN	APVD
	-	SEE SHEET 1	-	-	-

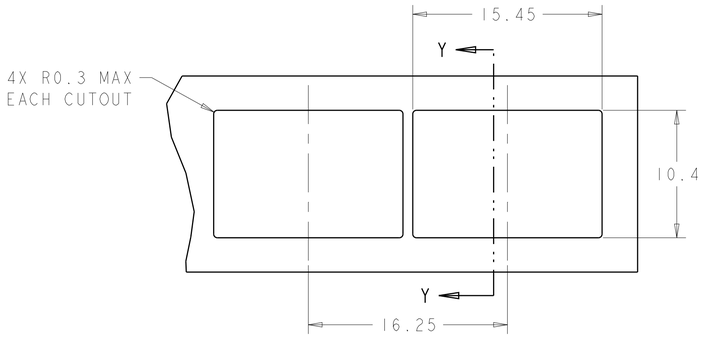

RECOMMENDED BEZEL CUTOUT
SCALE 4:1

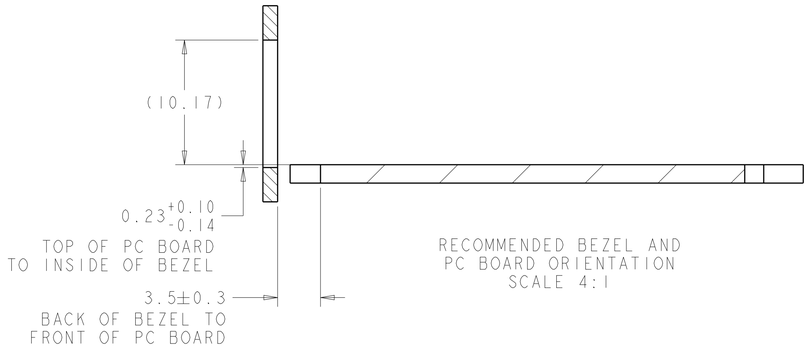

RECOMMENDED BEZEL AND
PC BOARD ORIENTATION
SCALE 4:1

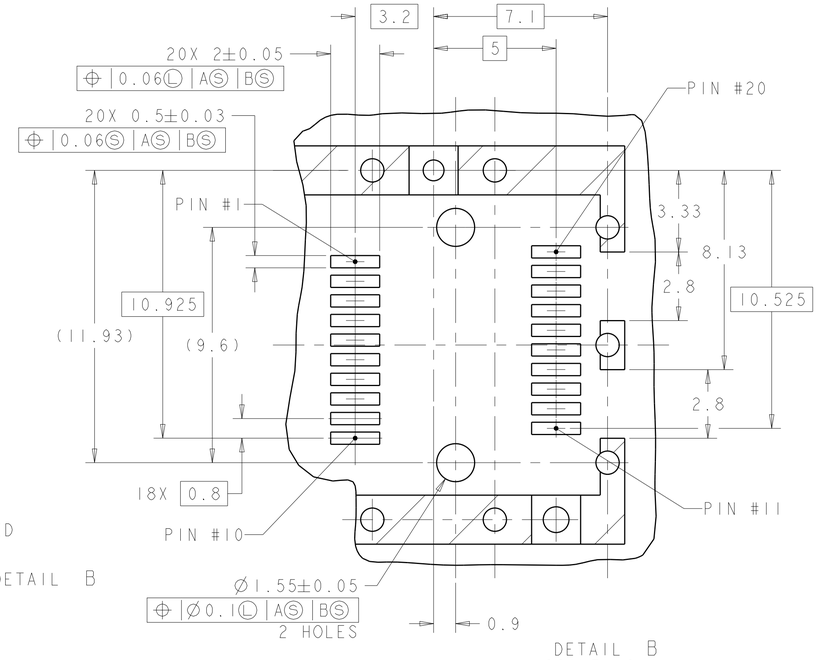

DETAIL B
SCALE 8:1

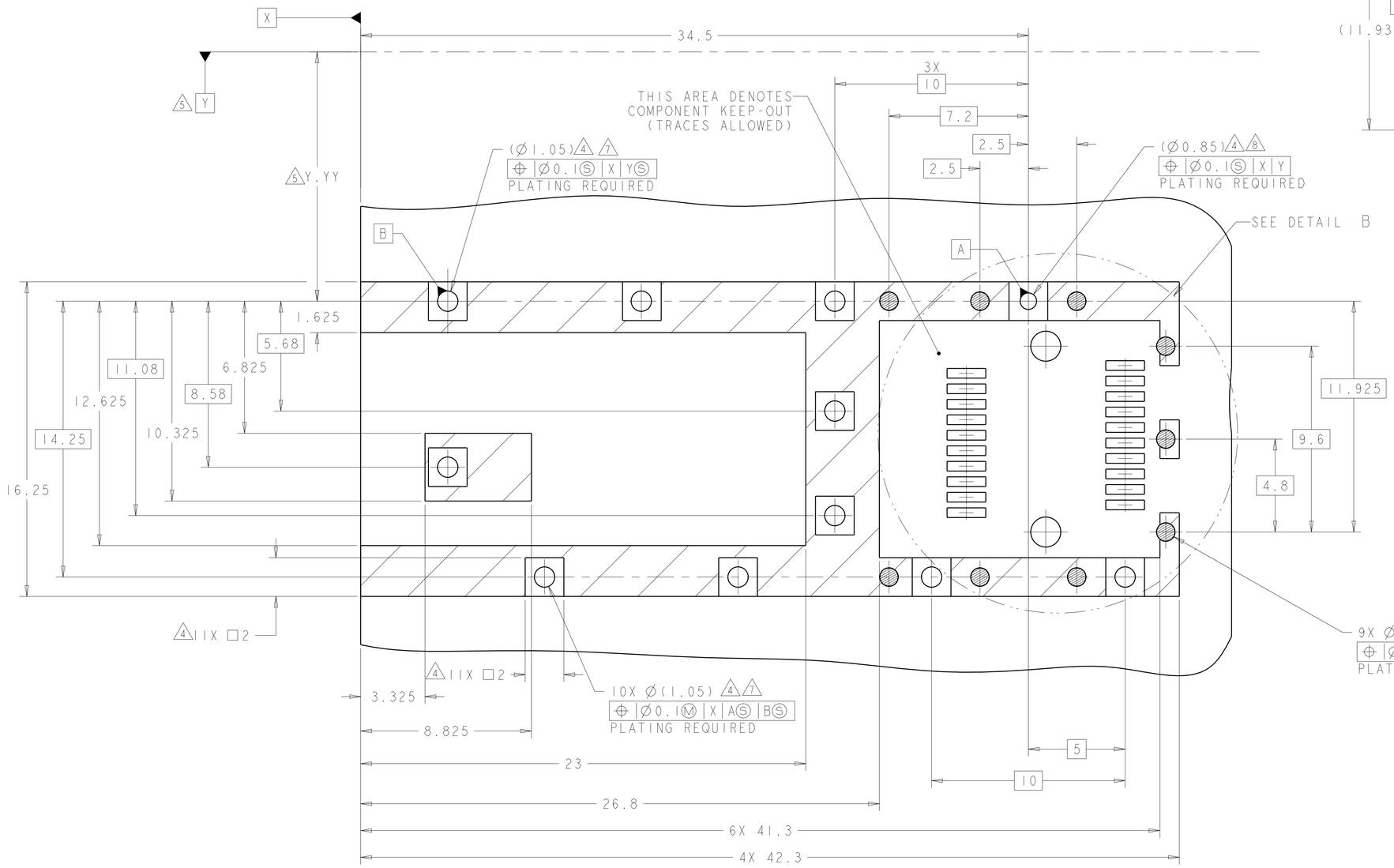

RECOMMENDED PCB LAYOUT FOR WITH
INSULATING TAPE PART
SCALE 8:1

THIS DRAWING IS A CONTROLLED DOCUMENT.

DIMENSIONS: mm

TOLERANCES UNLESS OTHERWISE SPECIFIED:
0 PLC ±0.1
1 PLC ±0.1
2 PLC ±0.1
3 PLC ±0.05
4 PLC ±0.05
ANGLES ±

MATERIAL
FINISH

DWN	Z.M.REAM	20NOV2007
CHK	M.R.SCHMITT	20NOV2007
APVD	R.H.WERTZ	20NOV2007
PRODUCT SPEC	108-2364	
APPLICATION SPEC	114-13120	
WEIGHT	-	

TE Connectivity

NAME: SFP+ 1X1 CAGE ASSEMBLY, PRESS-FIT PRESS-FIT, EMI SPRINGS WITH HEATSINK

SIZE	CAGE CODE	DRAWING NO	RESTRICTED TO
A1	00779	C-2007464	-

Customer Drawing | SCALE 2 | SHEET 4 OF 4 | REV F3

4805 (3/11)

Компания «ЭлектроПласт» предлагает заключение долгосрочных отношений при поставках импортных электронных компонентов на взаимовыгодных условиях!

Наши преимущества:

- Оперативные поставки широкого спектра электронных компонентов отечественного и импортного производства напрямую от производителей и с крупнейших мировых складов;
- Поставка более 17-ти миллионов наименований электронных компонентов;
- Поставка сложных, дефицитных, либо снятых с производства позиций;
- Оперативные сроки поставки под заказ (от 5 рабочих дней);
- Экспресс доставка в любую точку России;
- Техническая поддержка проекта, помощь в подборе аналогов, поставка прототипов;
- Система менеджмента качества сертифицирована по Международному стандарту ISO 9001;
- Лицензия ФСБ на осуществление работ с использованием сведений, составляющих государственную тайну;
- Поставка специализированных компонентов (Xilinx, Altera, Analog Devices, Intersil, Interpoint, Microsemi, Aeroflex, Peregrine, Syfer, Eurofarad, Texas Instrument, Miteq, Cobham, E2V, MA-COM, Hittite, Mini-Circuits,General Dynamics и др.);

Помимо этого, одним из направлений компании «ЭлектроПласт» является направление «Источники питания». Мы предлагаем Вам помощь Конструкторского отдела:

- Подбор оптимального решения, техническое обоснование при выборе компонента;
- Подбор аналогов;
- Консультации по применению компонента;
- Поставка образцов и прототипов;
- Техническая поддержка проекта;
- Защита от снятия компонента с производства.

Как с нами связаться

Телефон: 8 (812) 309 58 32 (многоканальный)
Факс: 8 (812) 320-02-42
Электронная почта: org@eplast1.ru
Адрес: 198099, г. Санкт-Петербург, ул. Калинина, дом 2, корпус 4, литера А.