# LOW DROPOUT VOLTAGE REGULATOR

## ■ GENERAL DESCRIPTION

NJU7771/72/73/74/75/76 is a low dropout voltage regulator designed for portable items.

Advanced CMOS technology achieves high ripple rejection and low quiescent current.

NJU7774/75/76 features shunt switch which improves turn off response of output voltage when ON/OFF control is used.

## ■ PACKAGE OUTLINE

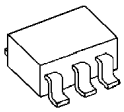

NJU777*F

## ■ FEATURES

- ● High Ripple Rejection 65dB typ. (f=1kHz,Vo=3.0V version)
- ● Low quiescent Current Iq=18μA (Io=0mA)
- ● Output capacitor with 1.0μF ceramic capacitor (Vo>2.0V version)
- ● Output Current Io(max.)=150mA
- ● High Precision Output Vo±1.0%
- ● Low Dropout Voltage 0.15V typ. (Io=100mA,Vo=3.0V)
- ● Input Voltage Range $V_{IN}$=+2.3V~9V(Vo≤2.0V version)
- ● ON/OFF Control (Active High)
- ● With Shunt Switch Only NJU7774/75/76
- ● Internal Short Circuit Current Limit
- ● Internal Thermal Overload Protection
- ● CMOS Technology
- ● Package Outline SOT-23-5

## ■ PIN CONFIGURATION

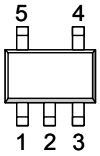


PIN FUNCTION

| | | |
|---|---|---|
| 1.CONTROL | 1.$V_{IN}$ | 1.$V_{OUT}$ |
| 2.GND | 2.GND | 2.GND |
| 3.NC | 3.CONTROL | 3.$V_{IN}$ |
| 4.$V_{OUT}$ | 4.NC | 4.CONTROL |
| 5.$V_{IN}$ | 5.$V_{OUT}$ | 5.NC |
| NJU7771F<br>NJU7774F | NJU7772F<br>NJU7775F | NJU7773F<br>NJU7776F |

## ■ EQUIVALENT CIRCUIT

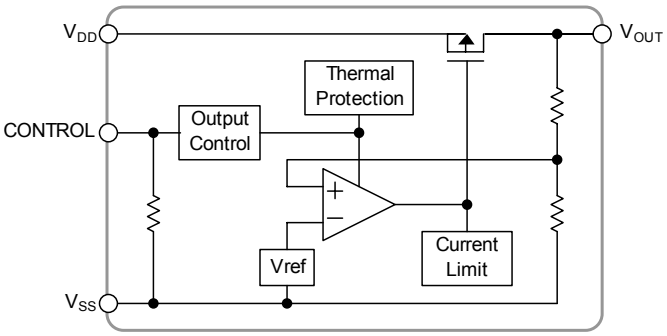


NJU7771/72/73

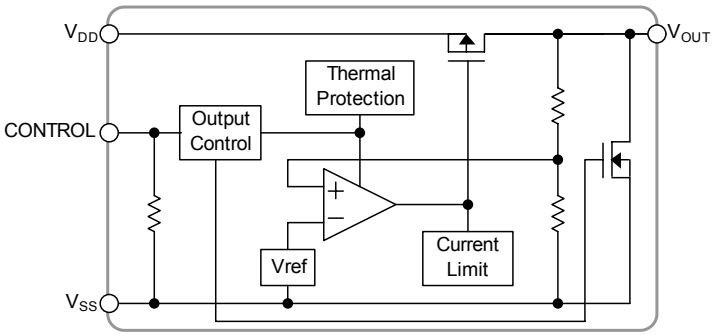


NJU7774/75/76

■ OUTPUT VOLTAGE RANK LIST

● NJU7771

| Device Name | $V_{OUT}$ | Device Name | $V_{OUT}$ | Device Name | $V_{OUT}$ | Device Name | $V_{OUT}$ |
|---|---|---|---|---|---|---|---|
| NJU7771F15 | 1.5V | NJU7771F23 | 2.3V | NJU7771F32 | 3.2V | NJU7771F04 | 4.0V |
| NJU7771F18 | 1.8V | NJU7771F25 | 2.5V | NJU7771F33 | 3.3V | NJU7771F42 | 4.2V |
| NJU7771F19 | 1.9V | NJU7771F27 | 2.7V | NJU7771F35 | 3.5V | NJU7771F05 | 5.0V |
| NJU7771F21 | 2.1V | NJU7771F28 | 2.8V | NJU7771F36 | 3.6V | | |
| NJU7771F22 | 2.2V | NJU7771F03 | 3.0V | NJU7771F38 | 3.8V | | |

● NJU7772

| Device Name | $V_{OUT}$ | Device Name | $V_{OUT}$ | Device Name | $V_{OUT}$ | Device Name | $V_{OUT}$ |
|---|---|---|---|---|---|---|---|
| NJU7772F15 | 1.5V | NJU7772F23 | 2.3V | NJU7772F32 | 3.2V | NJU7772F04 | 4.0V |
| NJU7772F18 | 1.8V | NJU7772F25 | 2.5V | NJU7772F33 | 3.3V | NJU7772F42 | 4.2V |
| NJU7772F19 | 1.9V | NJU7772F27 | 2.7V | NJU7772F35 | 3.5V | NJU7772F05 | 5.0V |
| NJU7772F21 | 2.1V | NJU7772F28 | 2.8V | NJU7772F36 | 3.6V | | |
| NJU7772F22 | 2.2V | NJU7772F03 | 3.0V | NJU7772F38 | 3.8V | | |

● NJU7773

| Device Name | $V_{OUT}$ | Device Name | $V_{OUT}$ | Device Name | $V_{OUT}$ | Device Name | $V_{OUT}$ |
|---|---|---|---|---|---|---|---|
| NJU7773F15 | 1.5V | NJU7773F23 | 2.3V | NJU7773F32 | 3.2V | NJU7773F04 | 4.0V |
| NJU7773F18 | 1.8V | NJU7773F25 | 2.5V | NJU7773F33 | 3.3V | NJU7773F42 | 4.2V |
| NJU7773F19 | 1.9V | NJU7773F27 | 2.7V | NJU7773F35 | 3.5V | NJU7773F05 | 5.0V |
| NJU7773F21 | 2.1V | NJU7773F28 | 2.8V | NJU7773F36 | 3.6V | | |
| NJU7773F22 | 2.2V | NJU7773F03 | 3.0V | NJU7773F38 | 3.8V | | |

● NJU7774

| Device Name | $V_{OUT}$ | Device Name | $V_{OUT}$ | Device Name | $V_{OUT}$ | Device Name | $V_{OUT}$ |
|---|---|---|---|---|---|---|---|
| NJU7774F15 | 1.5V | NJU7774F25 | 2.5V | NJU7774F33 | 3.3V | NJU7774F05 | 5.0V |
| NJU7774F18 | 1.8V | NJU7774F27 | 2.7V | NJU7774F35 | 3.5V | | |
| NJU7774F21 | 2.1V | NJU7774F28 | 2.8V | NJU7774F38 | 3.8V | | |
| NJU7774F22 | 2.2V | NJU7774F03 | 3.0V | NJU7774F04 | 4.0V | | |
| NJU7774F23 | 2.3V | NJU7774F32 | 3.2V | NJU7774F42 | 4.2V | | |

● NJU7775

| Device Name | $V_{OUT}$ | Device Name | $V_{OUT}$ | Device Name | $V_{OUT}$ | Device Name | $V_{OUT}$ |
|---|---|---|---|---|---|---|---|
| NJU7775F15 | 1.5V | NJU7775F25 | 2.5V | NJU7775F33 | 3.3V | NJU7775F05 | 5.0V |
| NJU7775F18 | 1.8V | NJU7775F27 | 2.7V | NJU7775F35 | 3.5V | | |
| NJU7775F21 | 2.1V | NJU7775F28 | 2.8V | NJU7775F38 | 3.8V | | |
| NJU7775F22 | 2.2V | NJU7775F03 | 3.0V | NJU7775F04 | 4.0V | | |
| NJU7775F23 | 2.3V | NJU7775F32 | 3.2V | NJU7775F42 | 4.2V | | |

● NJU7776

| Device Name | $V_{OUT}$ | Device Name | $V_{OUT}$ | Device Name | $V_{OUT}$ | Device Name | $V_{OUT}$ |
|---|---|---|---|---|---|---|---|
| NJU7776F15 | 1.5V | NJU7776F25 | 2.5V | NJU7776F33 | 3.3V | NJU7776F05 | 5.0V |
| NJU7776F18 | 1.8V | NJU7776F27 | 2.7V | NJU7776F35 | 3.5V | | |
| NJU7776F21 | 2.1V | NJU7776F28 | 2.8V | NJU7776F38 | 3.8V | | |
| NJU7776F22 | 2.2V | NJU7776F03 | 3.0V | NJU7776F04 | 4.0V | | |
| NJU7776F23 | 2.3V | NJU7776F32 | 3.2V | NJU7776F42 | 4.2V | | |

■ ABSOLUTE MAXIMUM RATINGS (Ta=25°C)

| PARAMETER | SYMBOL | RATINGS | | UNIT |
|---|---|---|---|---|
| Input Voltage | $V_{IN}$ | +10 | | V |
| Control Voltage | $V_{CONT}$ | +10(*1) | | V |
| Power Dissipation | $P_D$ | SOT-23-5 | 350(*2) | mW |
| | | | 200(*3) | |
| Operating Temperature | Topr | –40 ~ +85 | | °C |
| Storage Temperature | Tstg | –40 ~ +125 | | °C |
| OFF-state Output Sink Current(*4) | $I_O$ | 10 | | mA |

(*1): When input voltage is less than +10V, the absolute maximum control voltage is equal to the input voltage.

(*2) : Mounted on glass epoxy board based on EIA/JEDEC. (114.3x76.2x1.6mm: 2Layers)

(*3) : Device itself

(*4): This maximum rating is applied to NJU7774/75/76.

■ Operating voltage

$V_{IN}$=+2.3 ~ +14V (In case of Vo<2.1V version)

■ ELECTRICAL CHARACTERISTICS

($V_{IN}$=Vo+1V, $C_{IN}$=0.1μF, Co=1.0μF(Co=2.2μF: Vo≤2.0V), Ta=25°C)

| PARAMETER | SYMBOL | TEST CONDITION | MIN. | TYP. | MAX. | UNIT |
|---|---|---|---|---|---|---|
| Output Voltage | Vo | Io=30mA | -1.0% | – | +1.0% | V |
| Input Voltage | $V_{IN}$ | | – | – | 9 | V |
| Quiescent Current | $I_Q$ | Io=0mA, $V_{CONT}$=$V_{IN}$ | – | 18 | 35 | μA |
| Quiescent Current at Control OFF | $I_{Q(OFF)}$ | $V_{CONT}$=0V | – | 0.1 | 1 | μA |
| Output Current | Io | Vo-0.1V (Vo≤2.0V)<br>Vo-0.3V (Vo≥2.1V) | 150 | – | – | mA |
| Short Current Limit | $I_{LIM}$ | Vo=0V | – | 50 | – | mA |
| Line Regulation | Δ Vo/Δ $V_{IN}$ | $V_{IN}$=Vo+1V ~ Vo+6.0V (Vo<3.0V)<br>$V_{IN}$=Vo+1V ~ 9.0V (Vo≥3.0V),<br>Io=30mA | – | – | 0.20 | %/V |
| Load Regulation | Δ Vo/Δ Io | Io=0 ~ 100mA | – | – | 0.03 | %/mA |
| Dropout Voltage(*note 3) | Δ $V_{I-O}$ | Io=100mA, 2.1V≤Vo≤2.4V | – | 0.2 | 0.3 | V |
| | | Io=100mA, 2.5V≤Vo≤2.7V | – | 0.18 | 0.28 | V |
| | | Io=100mA, 2.8V≤Vo≤3.3V | – | 0.15 | 0.25 | V |
| | | Io=100mA, 3.4V≤Vo≤5.0V | – | 0.12 | 0.22 | V |
| Ripple Rejection | RR | ein=200mVrms,f=1kHz,Io=10mA,<br>Vo=3.0V Version | – | 65 | – | dB |
| Average Temperature Coefficient of Output Voltage | Δ Vo/Δ Ta | Ta=0 ~ 85°C, Io=10mA | – | ±100 | – | ppm/°C |
| Output Noise Voltage | $V_{NO1}$ | f=10Hz ~ 80kHz,Io=0mA,Vo=3.0V Version | – | 40 | – | μVrms |
| | $V_{NO2}$ | f=10Hz~80kHz,Io=10mA,Vo=3.0V Version | – | 70 | – | μVrms |
| Pull-down Resistance | $R_{CONT}$ | | 2 | 5 | 10 | MΩ |
| Control Voltage for ON-state | $V_{CONT(ON)}$ | | 1.6 | – | – | V |
| Control Voltage for OFF-state | $V_{CONT(OFF)}$ | | – | – | 0.3 | V |
| Pull-down Resistance at OFF-state(*6) | $R_{O(OFF)}$ | $V_{CONT}$=0V ($V_O$=3.0V Version) | – | 120 | – | Ω |

(*5): Except output voltage less than 2.1V.

(*6) This electrical characteristics is applied to NJU7774/75/76.

The above specification is a common specification for all output voltages.

Therefore, it may be different from the individual specification for a specific output voltage.

■ TEST CIRCUIT

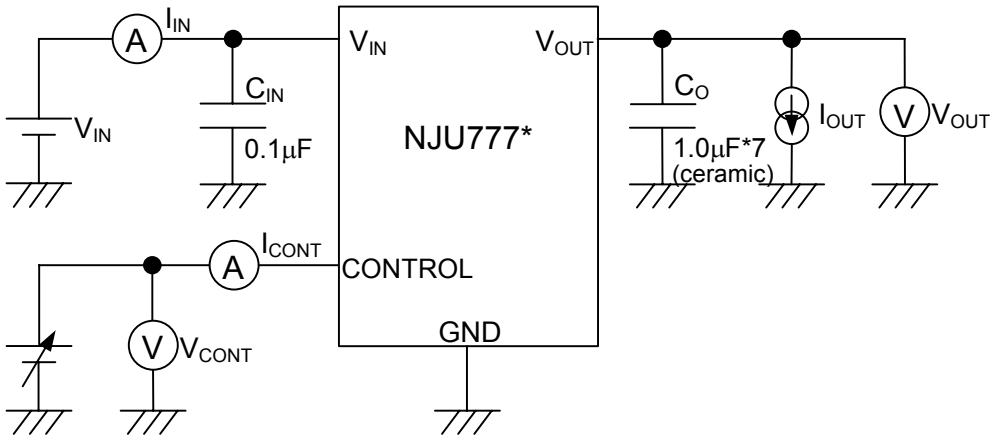


*7 Vo≤2.0V version: Co=2.2μF(ceramic)

■ POWER DISSIPATION vs. AMBIENT TEMPERATURE

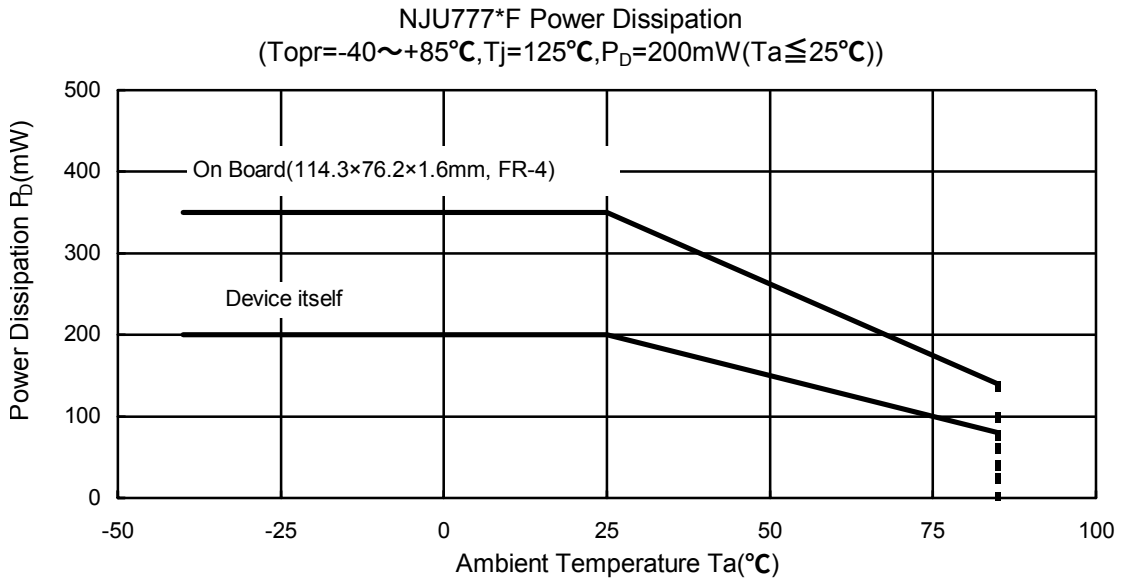

■ TYPICAL APPLICATION

① In case that ON/OFF Control is not required:

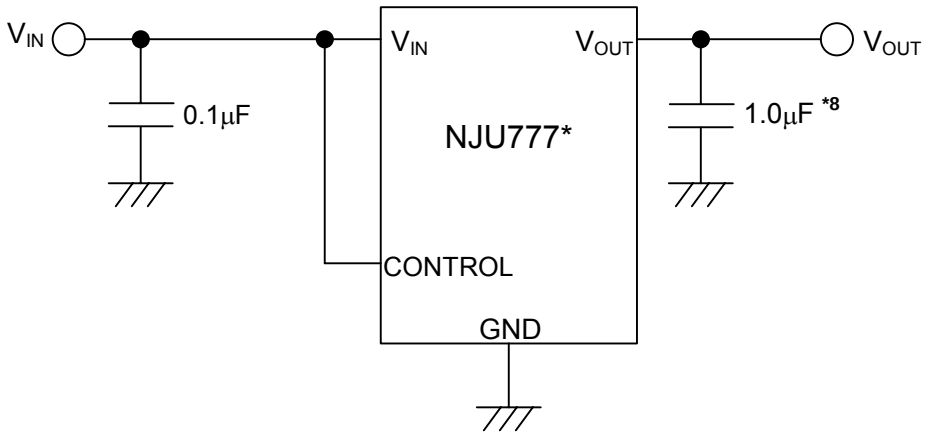


*8 Vo≤2.0V version: Co=2.2μF

Connect control terminal to $V_{IN}$ terminal.

② In use of ON/OFF Control

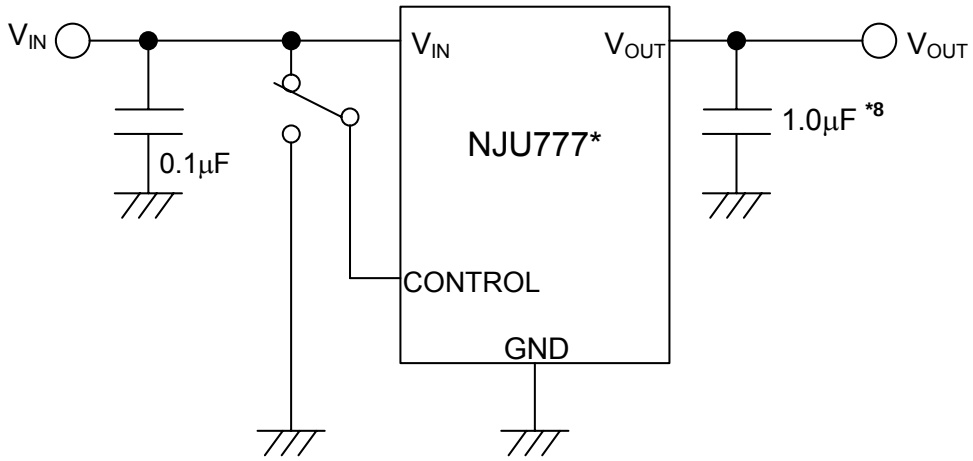


*8 Vo≤2.0V version: Co=2.2μF

State of control terminal:

- "H" → output is enabled.
- "L" or "open" → output is disabled.

## ■ ELECTRICAL CHARACTERISTICS

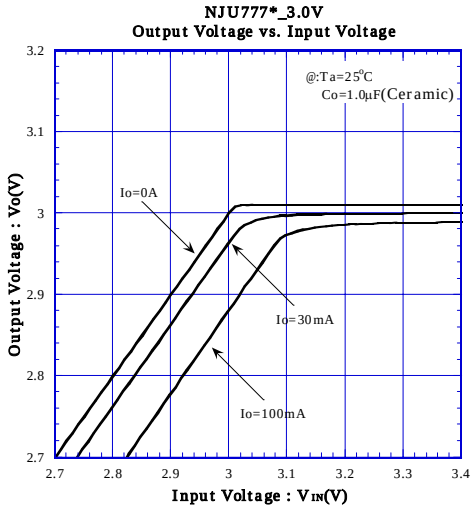


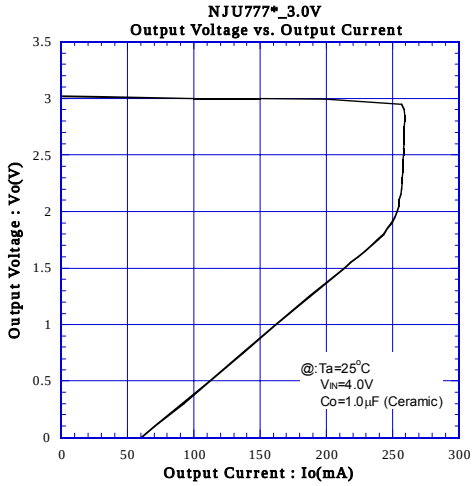


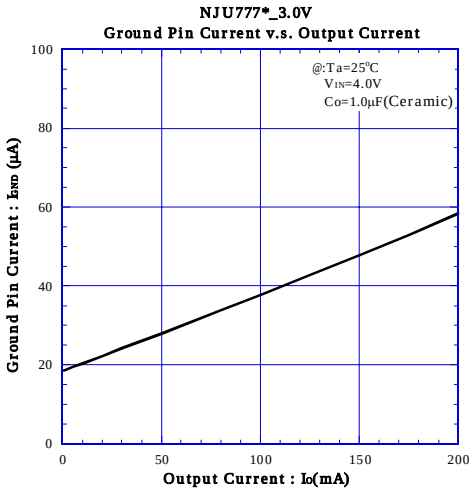


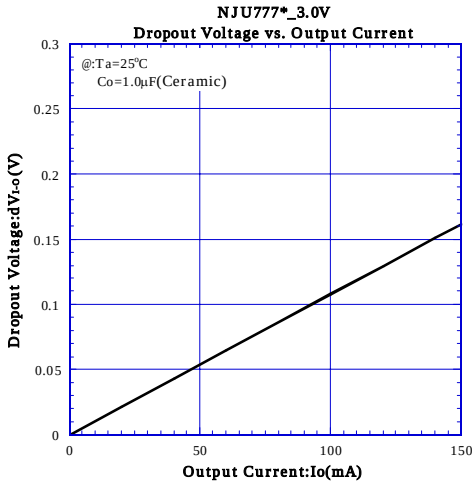


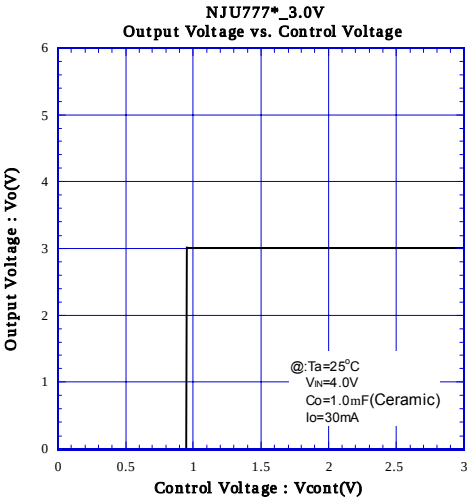

## ■ ELECTRICAL CHARACTERISTICS

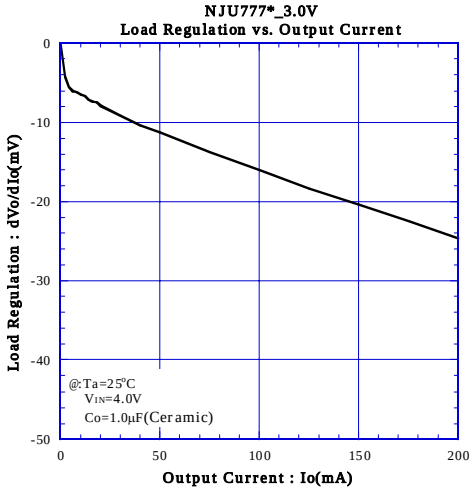


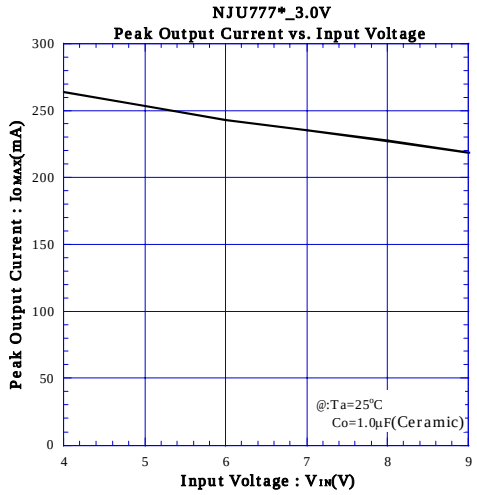


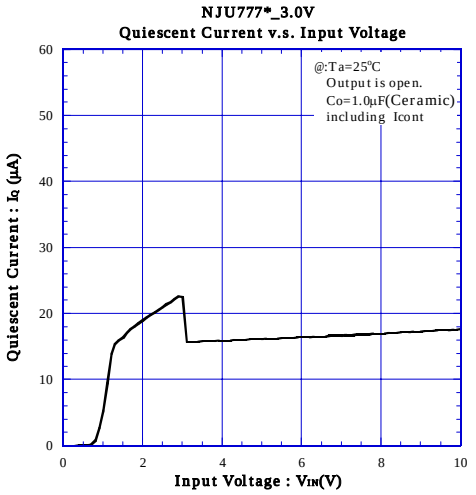


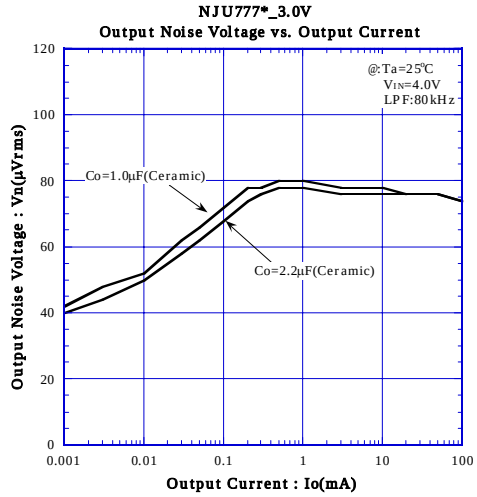


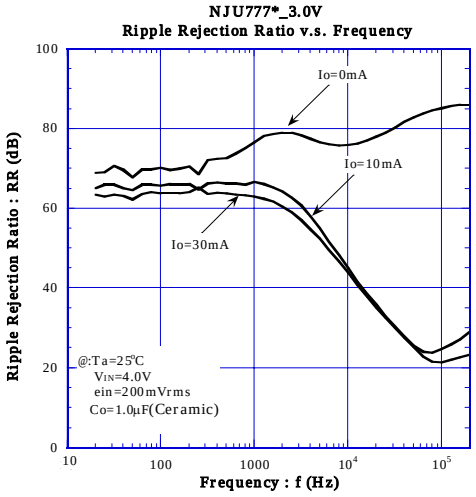

## ■ ELECTRICAL CHARACTERISTICS

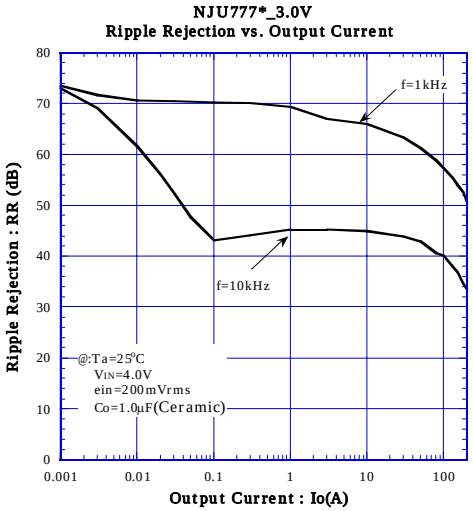


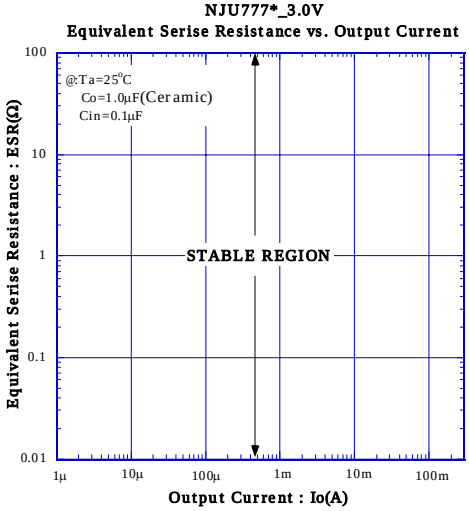


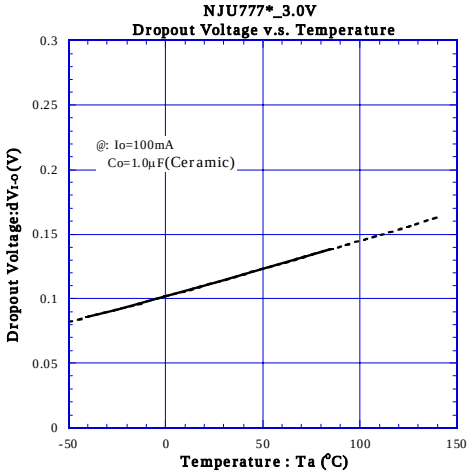


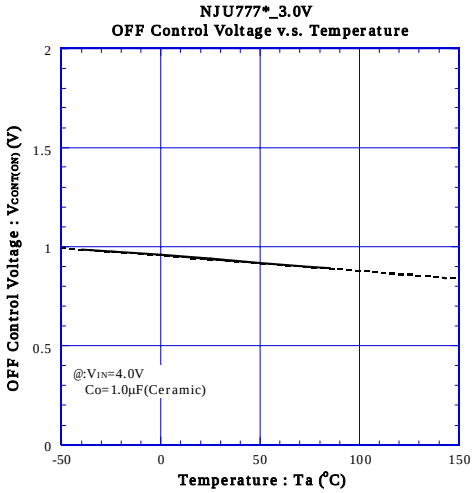


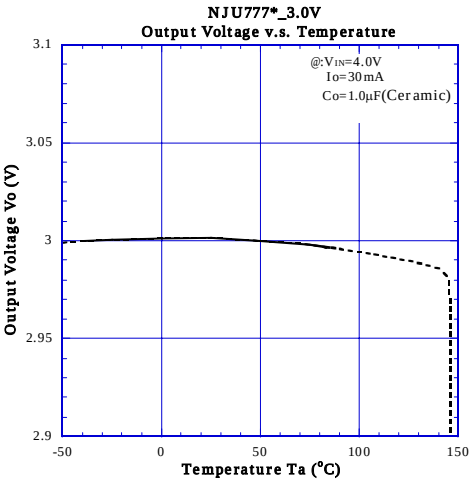


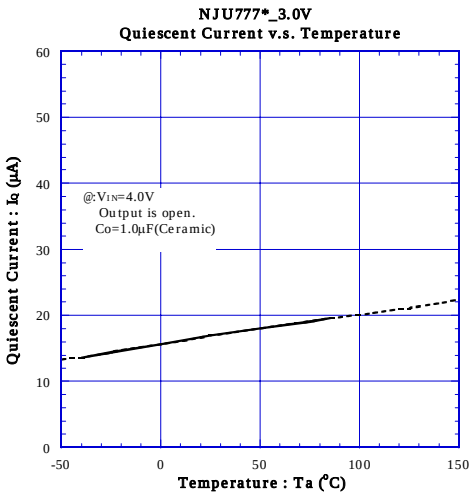

## ■ ELECTRICAL CHARACTERISTICS

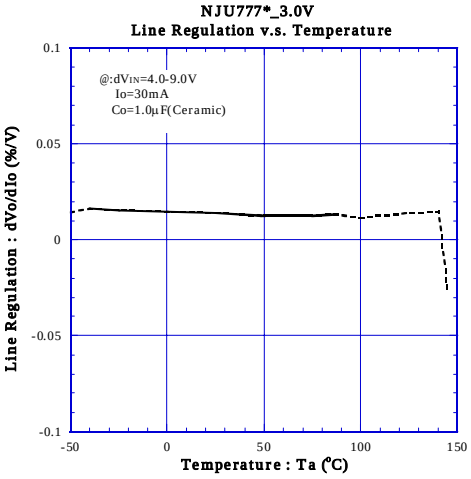


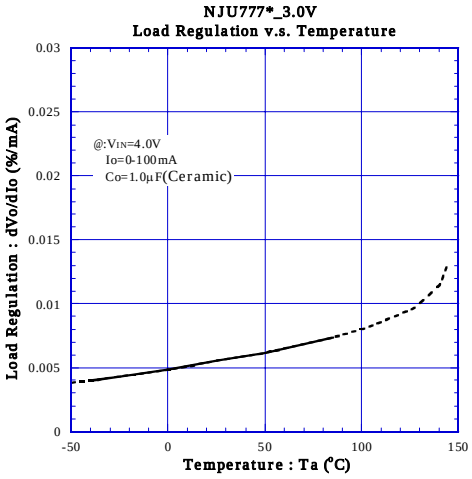


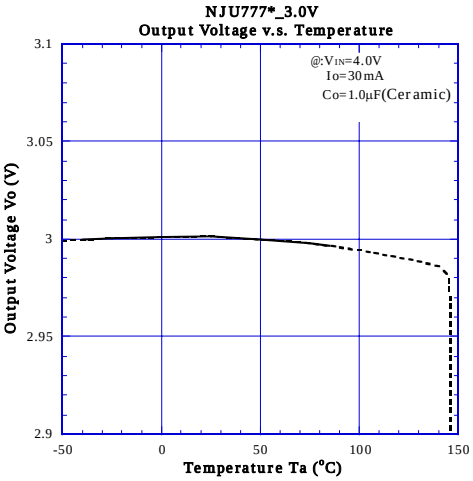


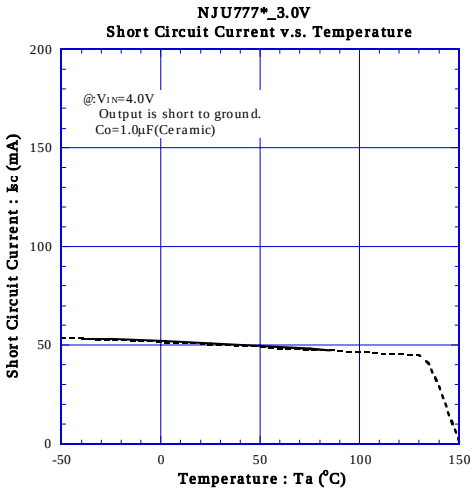

■ ELECTRICAL CHARACTERISTICS

**NJU777*_3.0V**
**ON/OFF Transient Response**

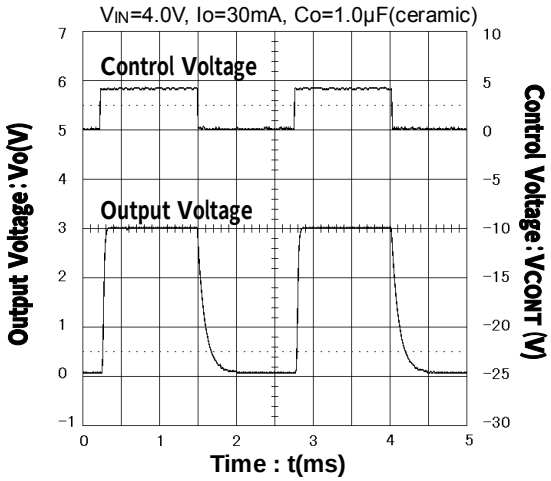


**NJU777*_3.0V**
**ON/OFF Transient Response without Load**

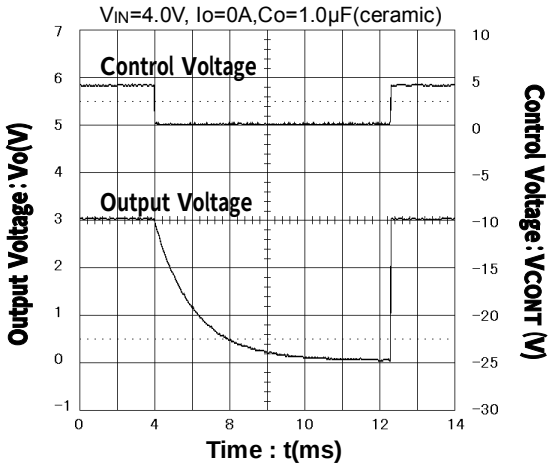


**NJU777*_3.0V**
**ON/OFF Transient Response without Load**

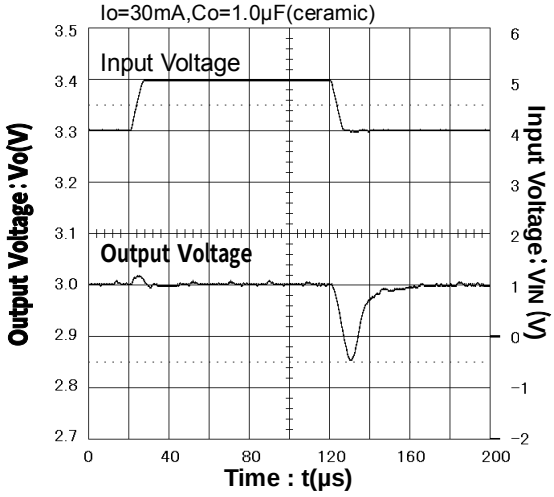


**NJU777*_3.0V**
**ON/OFF Transient Response without Load**

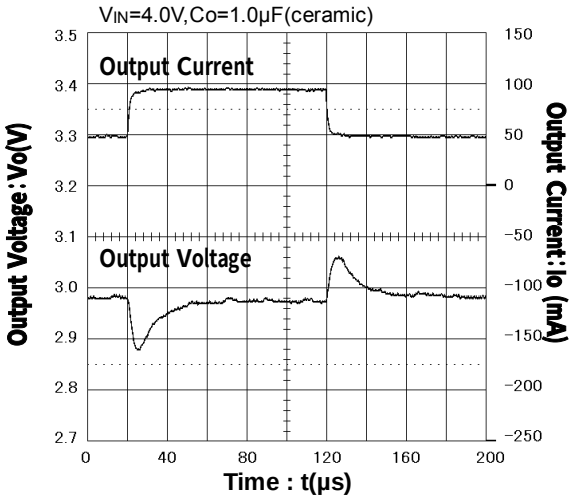


[CAUTION]
The specifications on this databook are only given for information , without any guarantee as regards either mistakes or omissions. The application circuits in this databook are described only to show representative usages of the product and not intended for the guarantee or permission of any right including the industrial rights.

Компания «ЭлектроПласт» предлагает заключение долгосрочных отношений при поставках импортных электронных компонентов на взаимовыгодных условиях!

Наши преимущества:

- Оперативные поставки широкого спектра электронных компонентов отечественного и импортного производства напрямую от производителей и с крупнейших мировых складов;
- Поставка более 17-ти миллионов наименований электронных компонентов;
- Поставка сложных, дефицитных, либо снятых с производства позиций;
- Оперативные сроки поставки под заказ (от 5 рабочих дней);
- Экспресс доставка в любую точку России;
- Техническая поддержка проекта, помощь в подборе аналогов, поставка прототипов;
- Система менеджмента качества сертифицирована по Международному стандарту ISO 9001;
- Лицензия ФСБ на осуществление работ с использованием сведений, составляющих государственную тайну;
- Поставка специализированных компонентов (Xilinx, Altera, Analog Devices, Intersil, Interpoint, Microsemi, Aeroflex, Peregrine, Syfer, Eurofarad, Texas Instrument, Miteq, Cobham, E2V, MA-COM, Hittite, Mini-Circuits,General Dynamics и др.);

Помимо этого, одним из направлений компании «ЭлектроПласт» является направление «Источники питания». Мы предлагаем Вам помощь Конструкторского отдела:

- Подбор оптимального решения, техническое обоснование при выборе компонента;
- Подбор аналогов;
- Консультации по применению компонента;
- Поставка образцов и прототипов;
- Техническая поддержка проекта;
- Защита от снятия компонента с производства.

**Как с нами связаться**

**Телефон:** 8 (812) 309 58 32 (многоканальный)
**Факс:** 8 (812) 320-02-42
**Электронная почта:** org@eplast1.ru
**Адрес:** 198099, г. Санкт-Петербург, ул. Калинина, дом 2, корпус 4, литера А.