TAOGLAS®

Datasheet

Part No: MA501.C.AC.001

Description: Heavy Duty Screw Mount Antenna – GPS-GALILEO / Dual-Band 2.4~5.2GHz

Features:

2.4GHz⍰5.2GHz suitable for ISM Bands/ZigBee/WLAN/Bluetooth

IEEE.802.11/IEEE.802.15

UV and vandal resistant PC housing

IP67 & IP69K Waterproof Compliance

Height 29mm Diameter 49mm

✓RoHS

✓REACH COMPLIANT

CE

1.	Introduction	3
2.	Specifications	5
3.	Antenna Characteristics	7
4.	2D Radiation Patterns	10
5.	3D Radiation Patterns	11
6.	Mechanical Drawing	13
7.	Installation	14
8.	Packaging	15

Taoglas makes no warranties based on the accuracy or completeness of the contents of this document and reserves the right to make changes to specifications and product descriptions at any time without notice. Taoglas reserves all rights to this document and the information contained herein.

Reproduction, use or disclosure to third parties without express permission is strictly prohibited.

Copyright © Taoglas Ltd.

Ireland ISO 9001: 2015 Certified

Taiwan ISO 9001: 2015 Certified

1. Introduction

MA501 is a combination of high performance GPS/GALILEO and dual band Wi-Fi (2.4–2.5/5.2GHz) antenna solution for reliable location information with localised data transfer via WLAN, Zigbee or Wi-Fi. This product incorporates the industry's most advanced GPS/GALILEO active ceramic patch technology (XtremeGain™) allowing for gains of up to 300% in accuracy compared to traditional antennas. Time to first fix is under 1 minute with all of the industry leading GPS/GALILEO receivers. XtremeGain technology means the antenna has been tuned for the Hercules environment giving you the optimum antenna solution to enable elimination of data gaps.

The 2.4/5.2GHz antenna inside has also been tuned for this enclosure; hence performance is excellent at all bands meaning the antenna works worldwide.

It was designed mainly for commercial vehicle and outdoor equipment installations, with extra thick threads, with the cables exiting through the bottom for ease of install. Durable and robust UV resistant PVC housing is resistant to vandalism and direct attack. It is designed for covert mounting as it is only 3cm high when mounted, thus complies with the latest EU directives for height restrictions.

The antenna housing is completely waterproof to IP67, and also to IP69K, which means it is waterproof against high pressure water jets used in industrial environments for cleaning.

1.1 Features

GPS / GALILEO

- High LNA Gain up to 32 dB ± 2 dB
- Miniaturized – diameter 49mm
- Low Noise (1.5 dB max)
- Resides in its own chamber and is tuned for the Hercules environment to enhance performance

WLAN / Wi-Fi

- Advanced dual-band antenna for worldwide application
- Tuned for the Hercules environment to enhance performance

Other

- Weatherproof (IP67 & IP69K) with robust foam seal
- Quality textured covert and low profile design
- UV and Vandal resistant PC housing

2. Specifications

GPS/GALILEO			
Frequency	1575.42MHz		
Average Gain	32dB typ.		
Gain @ Zenith	2.0dBi min.		
Gain @ 10 o Elevation	-4.0dBi min.		
Axial Ratio	3.0dB max.		
Polarization	Right Hand Circular		
VSWR	<=2.0:1		
Impedance	50Ω		
Noise Figure	1.5dB max.		
Bandwidth	10Mhz min.		
LNA Out-band Attenuation	fo = 1575.42MHz fo ± 30 MHz 5dB Min. fo ± 50 MHz 20dB Min. fo ± 100 MHz 25dB Min.		
Input Voltage	Min:1.8V	Typ. 3.0V	Max: 5.5V
Total Gain @ Zenith	25dBic	30dBic	32dBic
Current Consumption	6mA	12mA	30mA
Noise Figure	2.7dB	3.0dB	3.7dB
Cable	3m RG174 standard, fully customizable		
Connector	SMA(M) standard, standard, fully customizable		

Wi-Fi						
Frequency (GHz)	2.40	2.45	2.50	5.15	5.25	5.35
Average Gain (dBi)	-2.24	-2.06	-2.19	-3.74	-4.26	-3.84
Peak Gain (dBi)	3.05	4.05	4.11	4.74	4.37	4.71
Efficiency	63.3%	68.9%	66.4%	50.0%	41.6%	47.5 %
Return Loss (dB)	-14.5	-12.1	-12.7	-11.4	-15.3	-14.2
VSWR	<=1.8:1					
Impedance	50Ω					
Polarization	Linear - Horizontal					
Radiation Pattern	Omni					
Cable	3m NFC-200 standard, fully customizable					
Connector	RP-SMA(M) standard, standard, fully customizable					

Mechanical	
Dimensions	Height 29mm x Diameter 49mm
Casing	UV resistant PC
Base and thread	Nickel plated Zinc Alloy
Thread diameter	18mm
Weather proof gasket	CR4305 foam with 3M9448B double-side adhesive
Cable pull	8 Kgf
Weight	0.475kg
Recommended Mounting Torque	24.5N·m
Maximum Mounting Torque	29.4N·m
Environmental	
Waterproof	IP67 & IP69K
Corrosion	5% NaCl for 48hrs - Nickel plated zinc alloy base and thread
Temperature Range	-40°C to +85°C
Thermal Shock	100 cycles -40°C to +80°C
Humidity	Non-condensing 65°C 95% RH
Shock (drop test)	1m drop on concrete 6 axes

3. Antenna Characteristics

3.1 Return Loss - WiFi

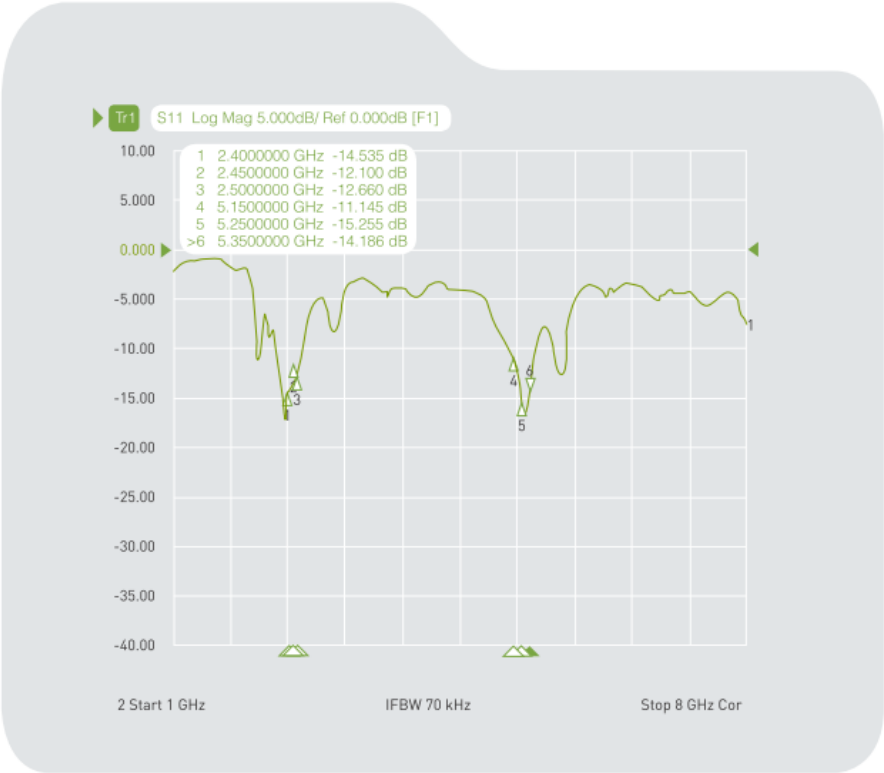

3.2 VSWR - WiFi

3.3 System Block Diagram

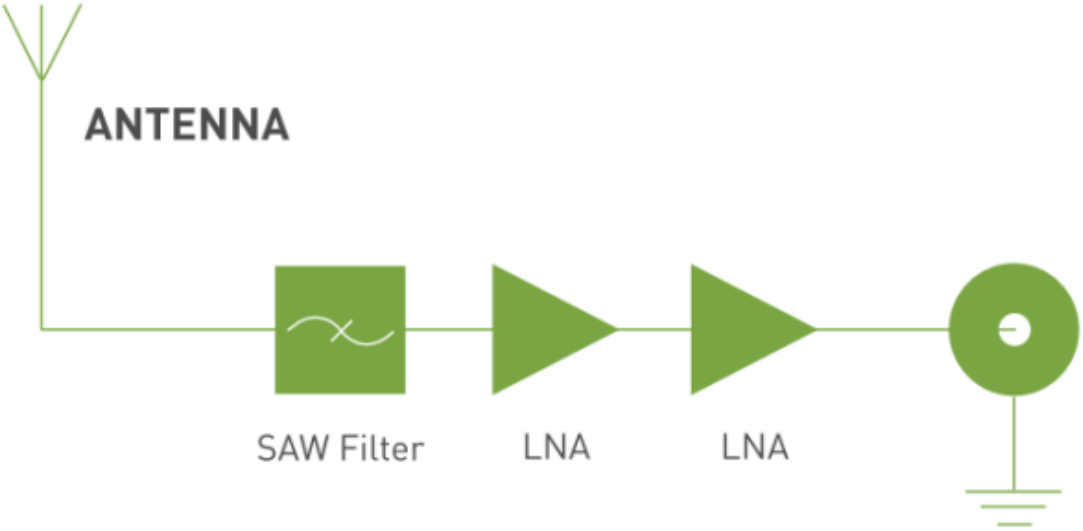

3.4 LNA Gain and Out-band Rejection

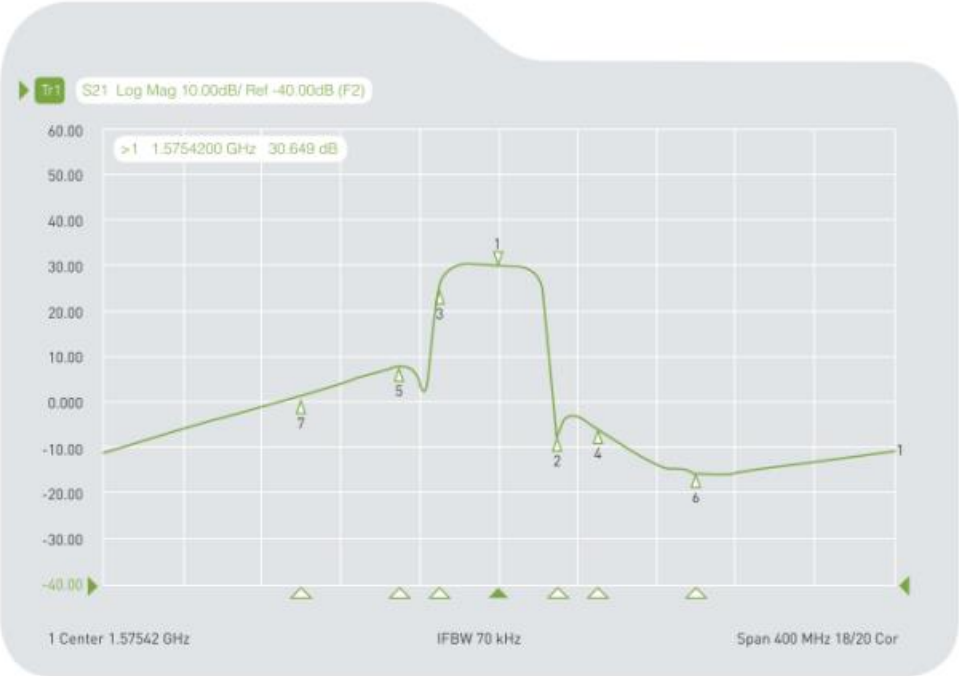

Cg1	Tr1	S21	>1	1.5754200 GHz	30.649 dB
Cg1	Tr1	S21	2	1.6054200 GHz	-6.7098 dB
Cg1	Tr1	S21	3	1.5454200 GHz	24.584 dB
Cg1	Tr1	S21	4	1.6254200 GHz	-5.6354 dB
Cg1	Tr1	S21	5	1.5254200 GHz	8.0734 dB
Cg1	Tr1	S21	6	1.6754200 GHz	-15.436 dB
Cg1	Tr1	S21	7	1.4754200 GHz	-1.5714 dB

3.5 Noise Figure

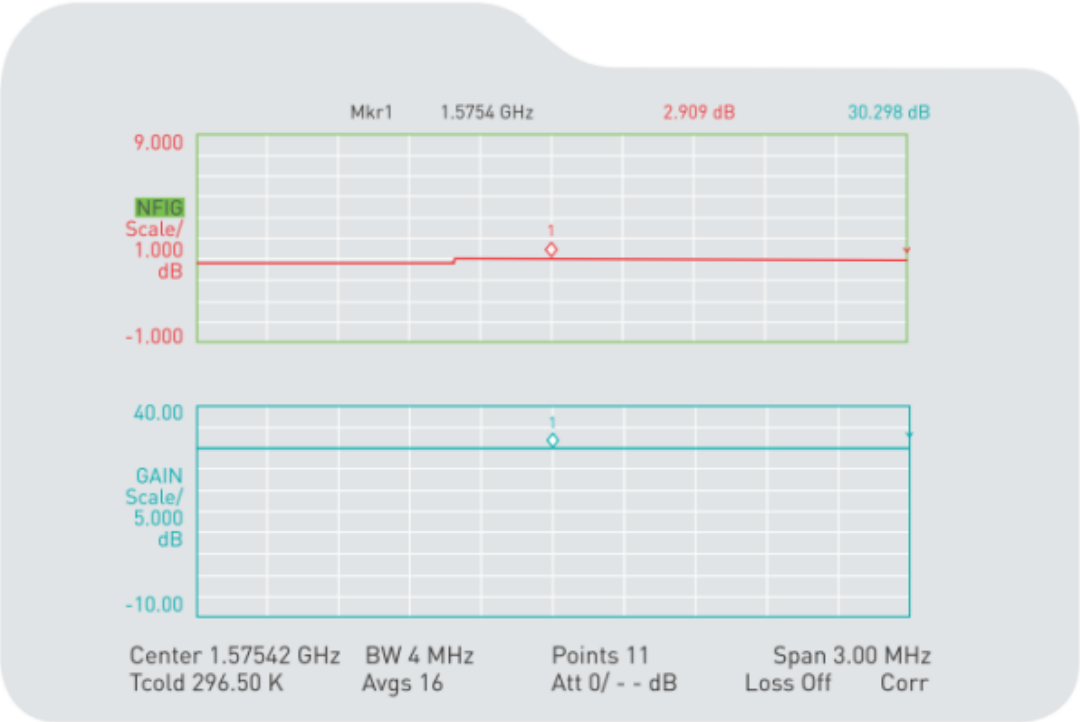

4. 2D Radiation Patterns

4.1 Test Setup

60*60cm Metal Plate

4.2 GPS/GALILEO Patch

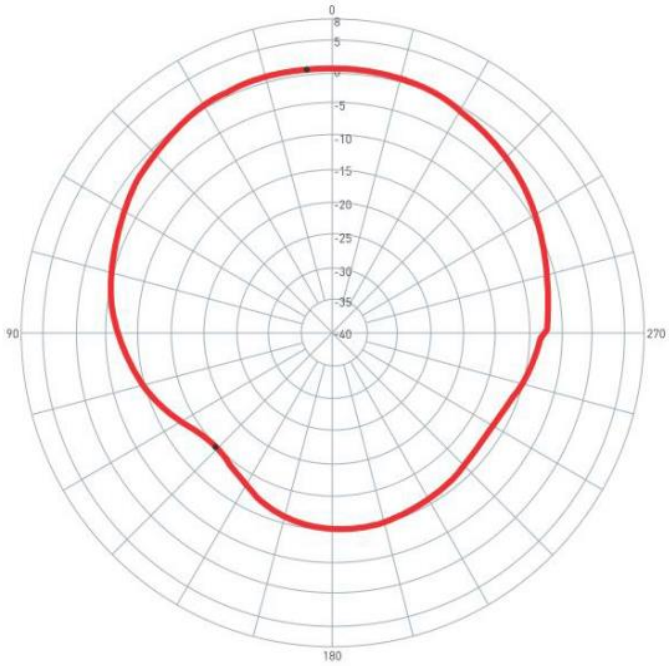

0 degree is the top of Hercules.

5. 3D Radiation Patterns

5.1 60*60cm Metal Base

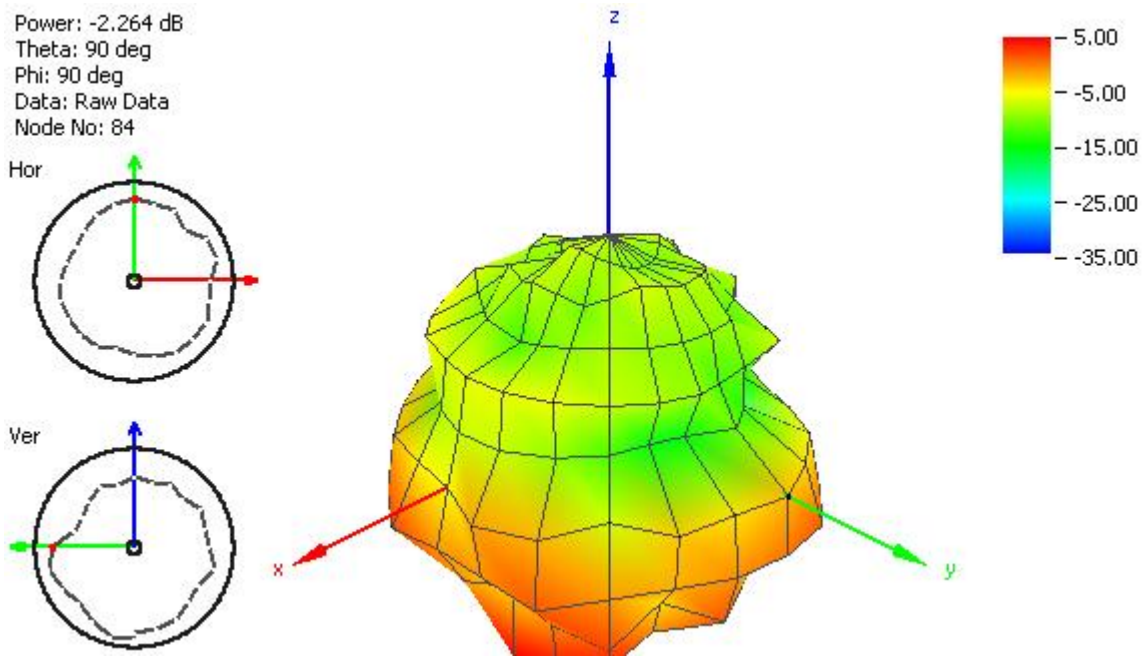

2500 MHz

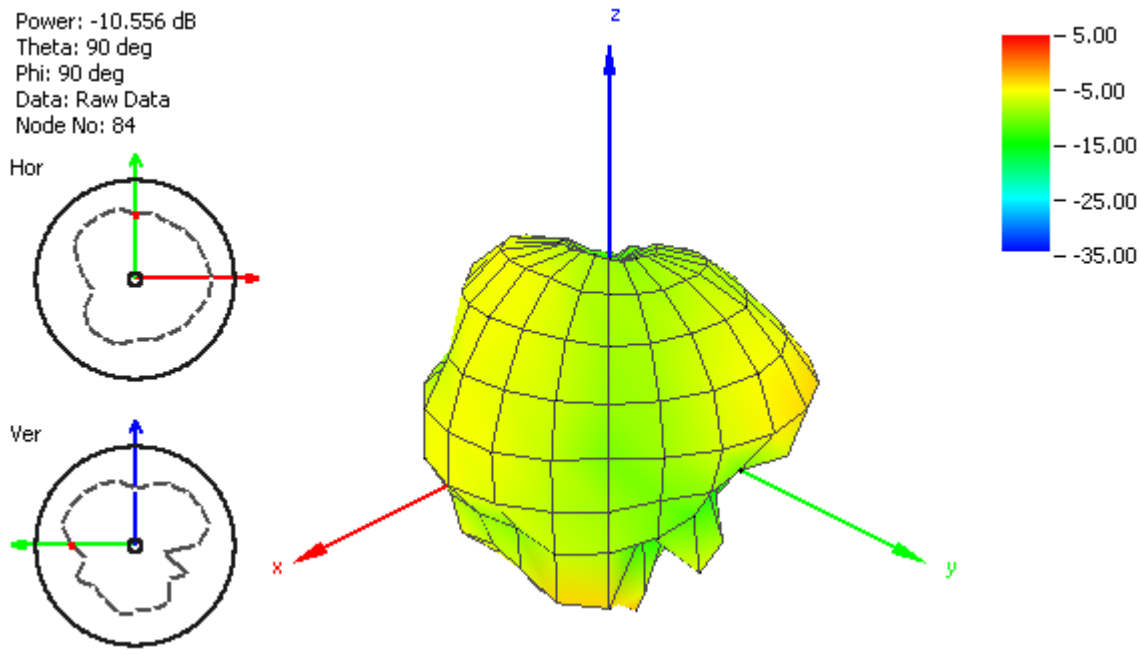

4900 MHz

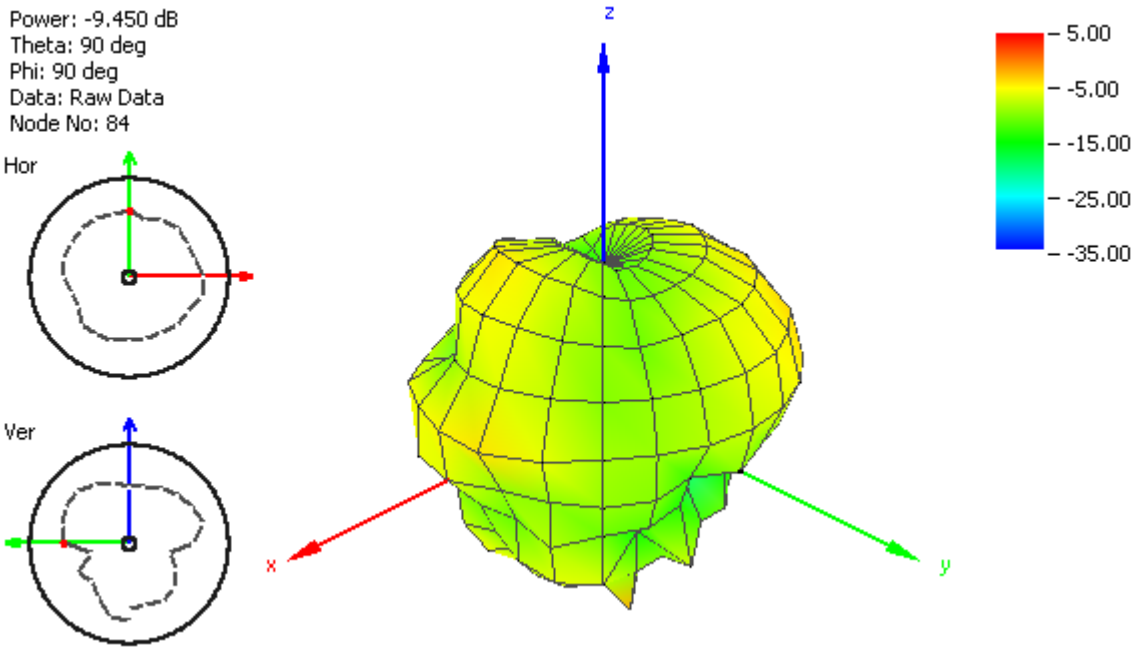

5150 MHz

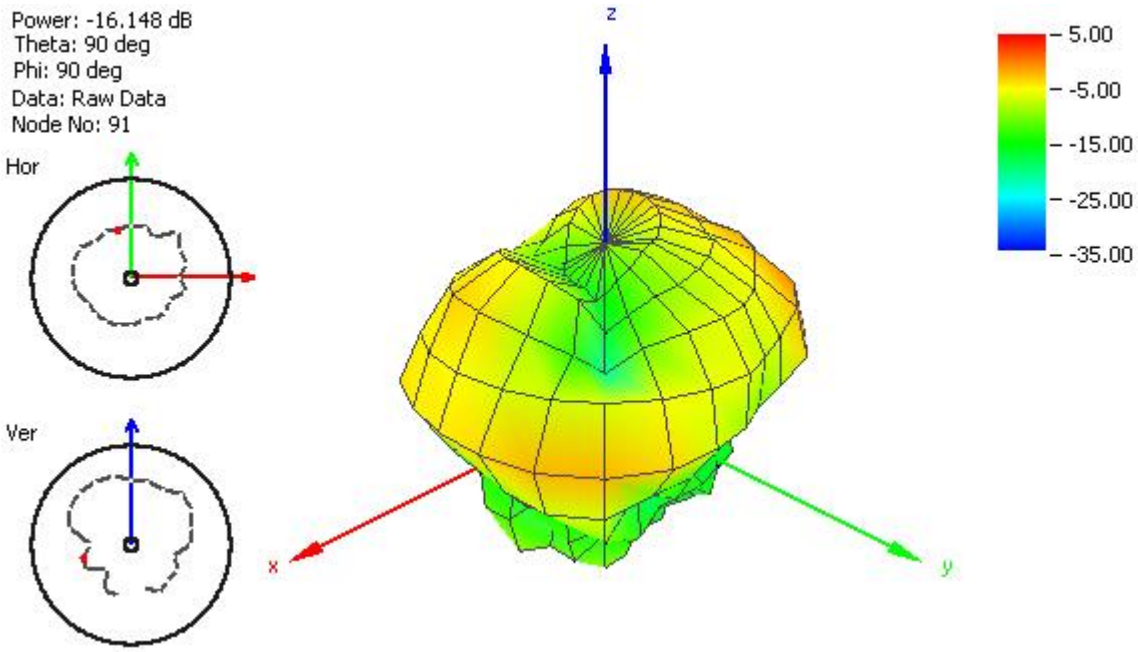

5850 MHz

6. Mechanical Drawing (Units: mm)

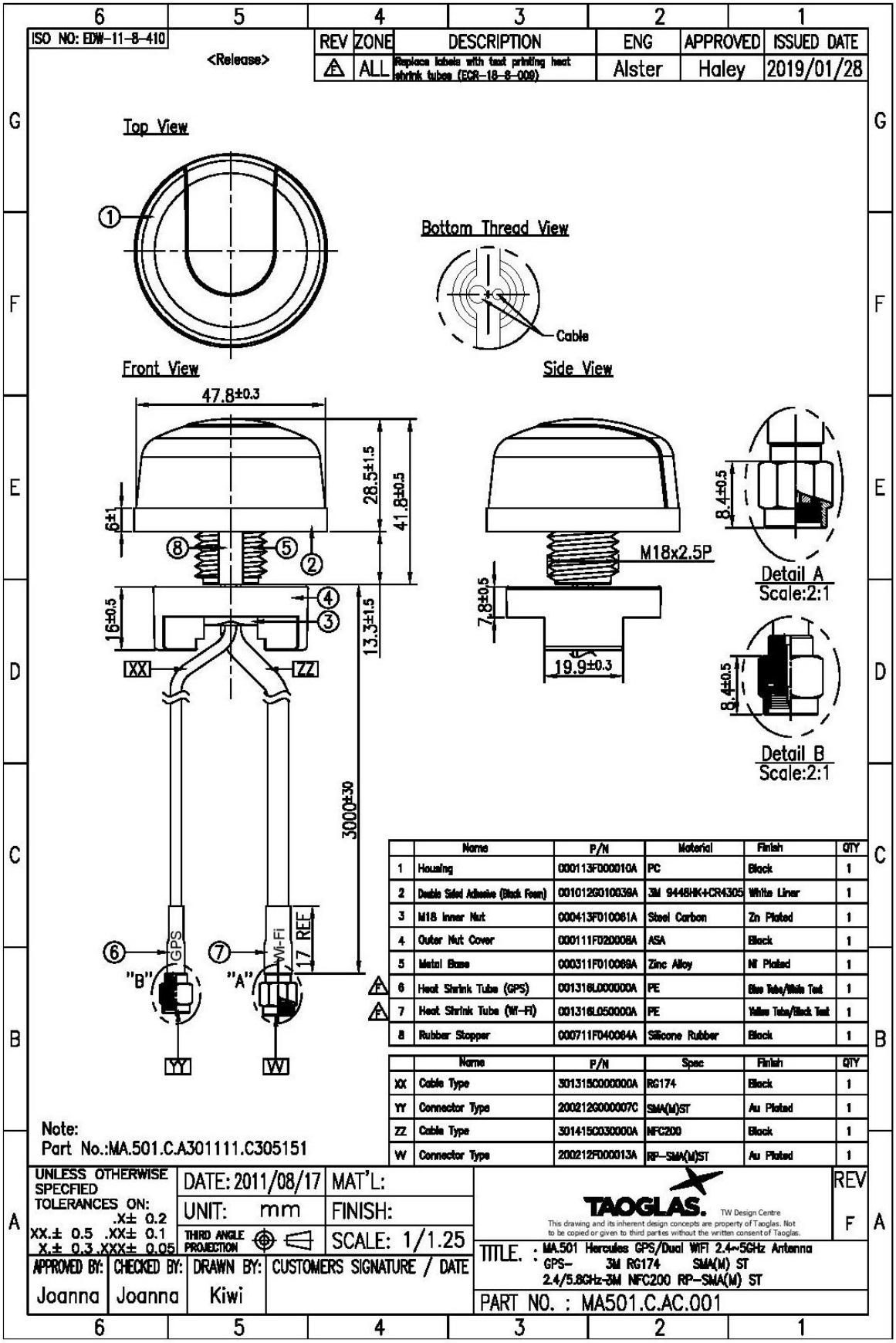

	Name	P/N	Material	Finish	QTY
1	Housing	000113F000010A	PC	Black	1
2	Double Sided Adhesive (Black Foam)	001012G010039A	3M 9448HK+CR4305	White Liner	1
3	M18 Inner Nut	000413F010061A	Steel Carbon	Zn Plated	1
4	Outer Nut Cover	000111F020008A	ASA	Black	1
5	Metal Base	000311F010069A	Zinc Alloy	Ni Plated	1
6	Heat Shrink Tube (GPS)	001316L000000A	PE	Blue Tube/White Text	1
7	Heat Shrink Tube (Wi-Fi)	001316L050000A	PE	Yellow Tube/Black Text	1
8	Rubber Stopper	000711F040064A	Silicone Rubber	Black	1

	Name	P/N	Spec	Finish	QTY
XX	Cable Type	301315C000000A	RG174	Black	1
YY	Connector Type	200212G000007C	SMA(M)ST	Au Plated	1
ZZ	Cable Type	301415C030000A	NFC200	Black	1
W	Connector Type	200212F000013A	RP-SMA(M)ST	Au Plated	1

7. Installation

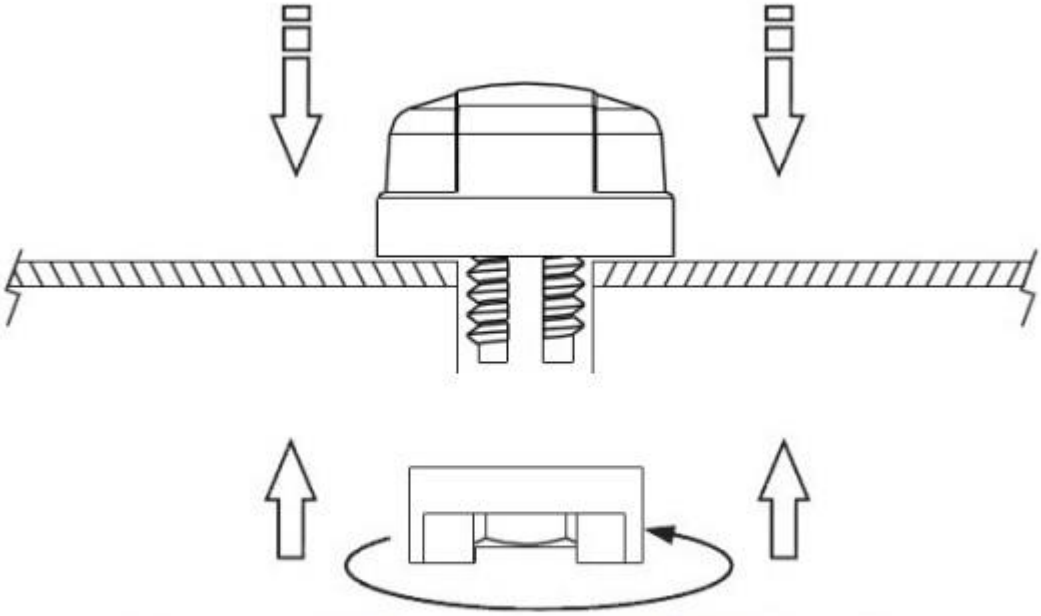

Recommended torque for Mounting is 24.5N·m
Maximum torque for mounting is 29.4N·m

8. Packaging

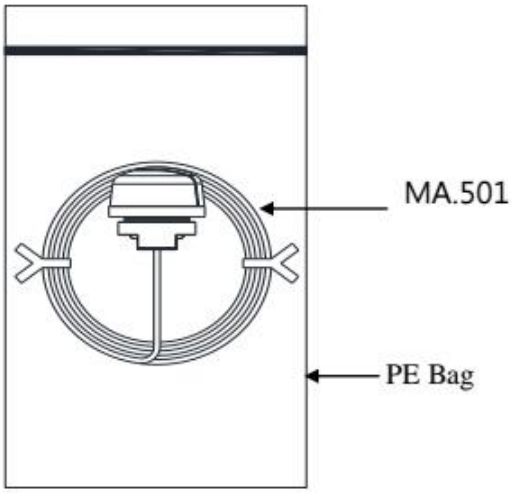

1pcs / PE Bag (160x300mm)

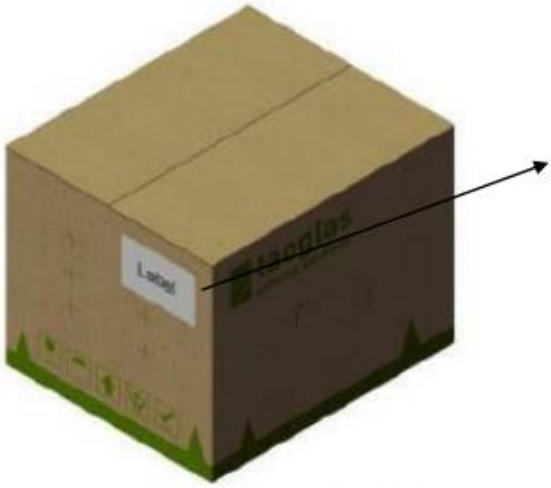

Shipping Label

SPQ: 25pcs / Carton
(320*250*290mm)
Weight 8.7Kg

TAOGLAS®

www.taoglas.com

Компания «ЭлектроПласт» предлагает заключение долгосрочных отношений при поставках импортных электронных компонентов на взаимовыгодных условиях!

Наши преимущества:

- Оперативные поставки широкого спектра электронных компонентов отечественного и импортного производства напрямую от производителей и с крупнейших мировых складов;
- Поставка более 17-ти миллионов наименований электронных компонентов;
- Поставка сложных, дефицитных, либо снятых с производства позиций;
- Оперативные сроки поставки под заказ (от 5 рабочих дней);
- Экспресс доставка в любую точку России;
- Техническая поддержка проекта, помощь в подборе аналогов, поставка прототипов;
- Система менеджмента качества сертифицирована по Международному стандарту ISO 9001;
- Лицензия ФСБ на осуществление работ с использованием сведений, составляющих государственную тайну;
- Поставка специализированных компонентов (Xilinx, Altera, Analog Devices, Intersil, Interpoint, Microsemi, Aeroflex, Peregrine, Syfer, Eurofarad, Texas Instrument, Miteq, Cobham, E2V, MA-COM, Hittite, Mini-Circuits,General Dynamics и др.);

Помимо этого, одним из направлений компании «ЭлектроПласт» является направление «Источники питания». Мы предлагаем Вам помощь Конструкторского отдела:

- Подбор оптимального решения, техническое обоснование при выборе компонента;
- Подбор аналогов;
- Консультации по применению компонента;
- Поставка образцов и прототипов;
- Техническая поддержка проекта;
- Защита от снятия компонента с производства.

Как с нами связаться

Телефон: 8 (812) 309 58 32 (многоканальный)
Факс: 8 (812) 320-02-42
Электронная почта: org@eplast1.ru
Адрес: 198099, г. Санкт-Петербург, ул. Калинина, дом 2, корпус 4, литера А.