POWER MATE TECHNOLOGY CO.,LTD.

P-DUKE

# FED20W SERIES

## FEATURES

- 20 WATTS MAXIMUM OUTPUT POWER
- OUTPUT CURRENT UP TO 5.5A
- STANDARD 2.0 X 1.0 X 0.4 INCH PACKAGE
- HIGH EFFICIENCY UP TO 89%
- 4:1 ULTRA WIDE INPUT VOLTAGE RANGE
- SIX-SIDED CONTINUOUS SHIELD
- FIXED SWITCHING FREQUENCY
- CE MARK MEETS 2006/95/EC, 93/68/EEC AND 2004/108/EC
- UL60950-1, EN60950-1 AND IEC60950-1 LICENSED
- ISO9001 CERTIFIED MANUFACTURING FACILITIES
- COMPLIANT TO RoHS EU DIRECTIVE 2002/95/EC

## APPLICATIONS

Wireless Network
Telecom/Datacom
Industry Control System
Measurement Equipment
Semiconductor Equipment

## OPTIONS

Negative logic Remote On/Off

## DESCRIPTION

The FED20W series offer 20 watts of output power from a 2 x 1 x 0.4 inch package. The FED20W series with 4:1 ultra wide input voltage of 9-36 and 18-75VDC and features 1600VDC of isolation, short-circuit and over-voltage protection.

## TECHNICAL SPECIFICATION

All specifications are typical at nominal input, full load and 25ºC otherwise noted

| OUTPUT SPECIFICATIONS | | | |
|---|---|---|---|
| Output power | | | 20 Watts, max. |
| Voltage accuracy | Full load and nominal Vin | | ± 1% |
| Minimum load | | | 0% |
| Voltage adjustability | Single output | | ± 10% |
| Line regulation | LL to HL at Full Load | Single<br>Dual | ± 0.2%<br>± 0.5% |
| Load regulation | No Load to Full Load | Single<br>Dual | ± 0.5%<br>± 1% |
| Cross regulation (Dual) | Asymmetrical load 25% / 100% FL | | ± 5% |
| Ripple and noise | 20MHz bandwidth<br>(Measured with a 0.1μF/50V MLCC) | | See table |
| Temperature coefficient | | | ±0.02% / ºC, max. |
| Transient response recovery time | 25% load step change | | 250μS |
| Over voltage protection Zener diode clamp | 3.3V output<br>5V output<br>12V output<br>15V output | | 3.9VDC<br>6.2VDC<br>15VDC<br>18VDC |
| Over load protection | % of FL at nominal input | | 150%, typ. |
| Short circuit protection | | | Hiccup, automatics recovery |

| GENERAL SPECIFICATIONS | | |
|---|---|---|
| Efficiency | | See table |
| Isolation voltage | Input to Output<br>Input(Output) to case | 1600VDC, min.<br>1600VDC, min. |
| Case grounding | | Connect case to -Vin with decoupling Y Cap |
| Isolation resistance | | $10^9$ohms, min. |
| Isolation capacitance | | 1500pF, max. |
| Switching frequency | | 400KHz, typ. |
| Approvals and standard | | IEC60950-1, UL60950-1, EN60950-1 |
| Case material | | Nickel-coated copper |
| Base material | | FR4 PCB |
| Potting material | | Epoxy (UL94-V0) |
| Dimensions | | 2.00 X 1.00 X 0.40 Inch (50.8X 25.4 X 10.2 mm) |
| Weight | | 27g (0.95oz) |
| MTBF (Note 1) | BELLCORE TR-NWT-000332<br>MIL-HDBK-217F | $1.620 \times 10^6$ hrs<br>$6.590 \times 10^5$ hrs |

| INPUT SPECIFICATIONS | | | |
|---|---|---|---|
| Input voltage range | 24V nominal input<br>48V nominal input | | 9 – 36VDC<br>18 – 75VDC |
| Input filter | | | Pi type |
| Input surge voltage 100mS max | 24V input<br>48V input | | 50VDC<br>100VDC |
| Input reflected ripple current | Nominal Vin and full load | | 20mAp-p |
| Start up time | Nominal Vin and constant resistive load | Power up<br>Remote ON/OFF | 20mS, typ.<br>20mS, typ. |
| Start-up voltage | 24V input<br>48V input | | 9VDC<br>18VDC |
| Shutdown voltage | 24V input<br>48V input | | 7.5VDC<br>15VDC |
| Remote ON/OFF (Note 6) (Positive logic)(Standard) | DC-DC ON<br>DC-DC OFF | | Open or 3V < Vr < 12V<br>Short or 0V < Vr < 1.2V |
| (Negative logic)(Option) | DC-DC ON<br>DC-DC OFF | | Short or 0V < Vr < 1.2V<br>Open or 3V < Vr < 12V |
| Input current of remote control pin | Nominal Vin | | -0.5mA ~ +0.5mA |
| Remote off state input current | Nominal Vin | | 2.5mA |

| ENVIRONMENTAL SPECIFICATIONS | | |
|---|---|---|
| Operating ambient temperature | | -40ºC ~ +66ºC (without derating)<br>+66ºC ~ +105ºC (with derating) |
| Maximum case temperature | | 105ºC |
| Storage temperature range | | -55ºC ~ +125ºC |
| Thermal impedance (Note 7) | Nature convection<br>Nature convection with heat-sink | 12ºC/Watt<br>10ºC/Watt |
| Thermal shock | | MIL-STD-810F |
| Vibration | | MIL-STD-810F |
| Relative humidity | | 5% to 95% RH |

| EMC CHARACTERISTICS | | | |
|---|---|---|---|
| EMI (Note 8) | EN55022 | | Class A |
| ESD | EN61000-4-2 | Air ± 8KV<br>Contact ± 6KV | Perf. Criteria B |
| Radiated immunity | EN61000-4-3 | 10 V/m | Perf. Criteria A |
| Fast transient (Note 9) | EN61000-4-4 | ± 2KV | Perf. Criteria B |
| Surge (Note 9) | EN61000-4-5 | ± 1KV | Perf. Criteria A |
| Conducted immunity | EN61000-4-6 | 10 Vr.m.s | Perf. Criteria A |

| Model Number | Input Range | Output Voltage | Output Current | | Output[4] Ripple & Noise | Input Current | | Eff [4] (%) | Capacitor[5] Load max |
|---|---|---|---|---|---|---|---|---|---|
| | | | Min. load | Full load | | No Load[3] | Full Load[2] | | |
| FED20-24S3P3W | 9 – 36 VDC | 3.3 VDC | 0mA | 5500mA | 60mVp-p | 50mA | 934mA | 85 | 18000μF |
| FED20-24S05W | 9 – 36 VDC | 5 VDC | 0mA | 4000mA | 75mVp-p | 65mA | 992mA | 88 | 9600μF |
| FED20-24S12W | 9 – 36 VDC | 12 VDC | 0mA | 1670mA | 75mVp-p | 22mA | 1018mA | 86 | 1650μF |
| FED20-24S15W | 9 – 36 VDC | 15 VDC | 0mA | 1330mA | 75mVp-p | 22mA | 1014mA | 86 | 1050μF |
| FED20-24D05W | 9 – 36 VDC | ±5 VDC | 0mA | ±2000mA | 100mVp-p | 55mA | 992mA | 88 | ±4800μF |
| FED20-24D12W | 9 – 36 VDC | ±12 VDC | 0mA | ±833mA | 100mVp-p | 30mA | 1004mA | 87 | ±825μF |
| FED20-24D15W | 9 – 36 VDC | ±15 VDC | 0mA | ±667mA | 100mVp-p | 30mA | 1005mA | 87 | ±525μF |
| FED20-48S3P3W | 18 – 75 VDC | 3.3 VDC | 0mA | 5500mA | 60mVp-p | 35mA | 467mA | 85 | 18000μF |
| FED20-48S05W | 18 – 75 VDC | 5 VDC | 0mA | 4000mA | 75mVp-p | 35mA | 496mA | 88 | 9600μF |
| FED20-48S12W | 18 – 75 VDC | 12 VDC | 0mA | 1670mA | 75mVp-p | 15mA | 503mA | 87 | 1650μF |
| FED20-48S15W | 18 – 75 VDC | 15 VDC | 0mA | 1330mA | 75mVp-p | 15mA | 501mA | 87 | 1050μF |
| FED20-48D05W | 18 – 75 VDC | ±5 VDC | 0mA | ±2000mA | 100mVp-p | 35mA | 490mA | 89 | ±4800μF |
| FED20-48D12W | 18 – 75 VDC | ±12 VDC | 0mA | ±833mA | 100mVp-p | 17mA | 496mA | 88 | ±825μF |
| FED20-48D15W | 18 – 75 VDC | ±15 VDC | 0mA | ±667mA | 100mVp-p | 17mA | 496mA | 88 | ±525μF |

Note:
1. BELLCORE TR-NWT-000332. Case 1: 50% Stress, Temperature at 40ºC.
   MIL-HDBK-217F Notice2 @Ta=25 ºC, Full load(Ground, Benign, controlled environment)
2. Maximum value at nominal input voltage and full load.
3. Typical value at nominal input voltage and no load.
4. Typical value at nominal input voltage and full load.
5. Test by minimum Vin and constant resistive load.
6. The ON/OFF control pin voltage is referenced to -Vin.
   To order negative logic ON/OFF control add the suffix-N (Ex: FED20-48S05W-N)
7. Heat sink is optional and P/N: 7G-0020C-F.
8. The FED20W series can meet EN55022 Class A with parallel an external capacitor to the input pins.
   Recommend : 24Vin : NA.
   48Vin : 1μF/100V 1210 MLCC.
9. An external input filter capacitor is required if the module has to meet EN61000-4-4, EN61000-4-5.
   The filter capacitor Power Mate suggest: Nippon chemi-con KY series, 220μF/100V, ESR 48mΩ.

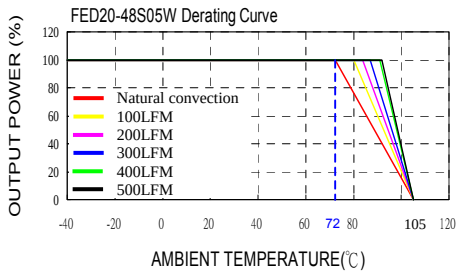


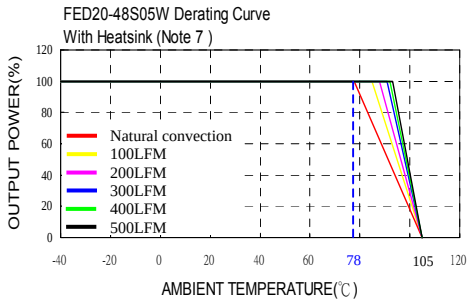


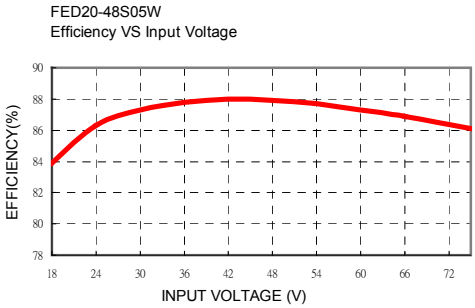


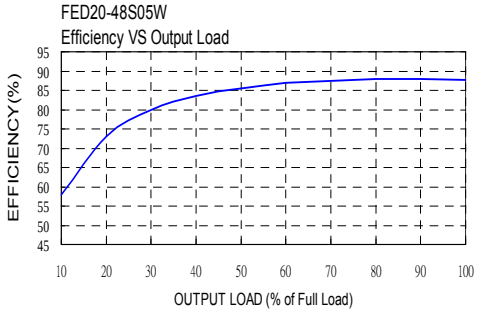

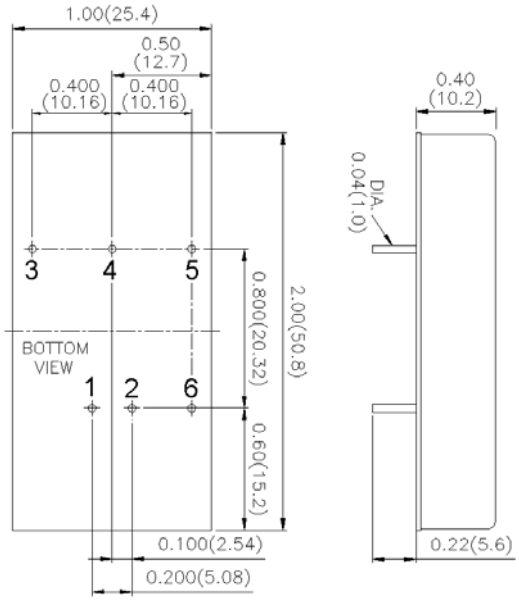


1. All dimensions in Inches (mm)
   Tolerance: X.XX±0.02 (X.X±0.5)
   X.XXX±0.01 (X.XX±0.25)
2. Pin pitch tolerance ±0.01(0.25)
3. Pin dimension tolerance ±0.004 (0.1)

| PIN CONNECTION | | |
|---|---|---|
| PIN | SINGLE | DUAL |
| 1 | + INPUT | + INPUT |
| 2 | - INPUT | - INPUT |
| 3 | + OUTPUT | + OUTPUT |
| 4 | TRIM | COMMON |
| 5 | - OUTPUT | - OUTPUT |
| 6 | CTRL | CTRL |

## EXTERNAL OUTPUT TRIMMING

Output can be externally trimmed by using the method shown below.

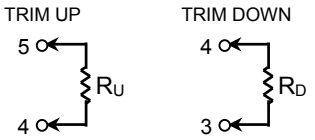


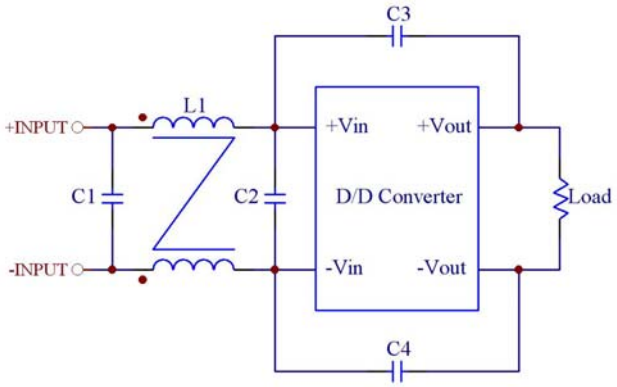


**Recommended Filter for EN55022 Class B Compliance**

The components used in the above figure, together with the manufacturers' part numbers for these components, are as follows:

| | C1 | C2 | C3 | C4 | L1 |
|---|---|---|---|---|---|
| FED20-24xxxW | 4.7μF/50V 1812 MLCC | N/A | 1000pF/2KV MLCC | 1000pF/2KV MLCC | 450μH Common Choke PMT-048 |
| FED20-48xxxW | 2.2μF/100V 1812 MLCC | 2.2μF/100V 1812 MLCC | 1000pF/2KV MLCC | 1000pF/2KV MLCC | 325μH Common Choke PMT-050 |

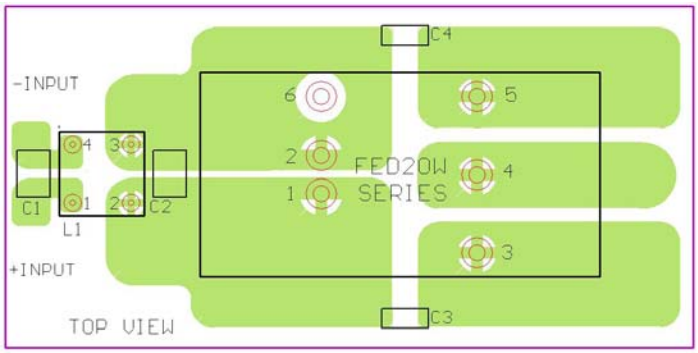


**Recommended EN55022 Class B Filter Circuit Layout**

Компания «ЭлектроПласт» предлагает заключение долгосрочных отношений при поставках импортных электронных компонентов на взаимовыгодных условиях!

Наши преимущества:

- Оперативные поставки широкого спектра электронных компонентов отечественного и импортного производства напрямую от производителей и с крупнейших мировых складов;
- Поставка более 17-ти миллионов наименований электронных компонентов;
- Поставка сложных, дефицитных, либо снятых с производства позиций;
- Оперативные сроки поставки под заказ (от 5 рабочих дней);
- Экспресс доставка в любую точку России;
- Техническая поддержка проекта, помощь в подборе аналогов, поставка прототипов;
- Система менеджмента качества сертифицирована по Международному стандарту ISO 9001;
- Лицензия ФСБ на осуществление работ с использованием сведений, составляющих государственную тайну;
- Поставка специализированных компонентов (Xilinx, Altera, Analog Devices, Intersil, Interpoint, Microsemi, Aeroflex, Peregrine, Syfer, Eurofarad, Texas Instrument, Miteq, Cobham, E2V, MA-COM, Hittite, Mini-Circuits,General Dynamics и др.);

Помимо этого, одним из направлений компании «ЭлектроПласт» является направление «Источники питания». Мы предлагаем Вам помощь Конструкторского отдела:

- Подбор оптимального решения, техническое обоснование при выборе компонента;
- Подбор аналогов;
- Консультации по применению компонента;
- Поставка образцов и прототипов;
- Техническая поддержка проекта;
- Защита от снятия компонента с производства.

**Как с нами связаться**

**Телефон:** 8 (812) 309 58 32 (многоканальный)
**Факс:** 8 (812) 320-02-42
**Электронная почта:** org@eplast1.ru
**Адрес:** 198099, г. Санкт-Петербург, ул. Калинина, дом 2, корпус 4, литера А.