Piezo Film Product Guide and Price List

Measurement Specialities (MEAS)
1000 Lucas Way
Hampton VA, 23666

Tel: 1-757-766-4474
Fax: 1-757-766-4297
North America Toll Free: 1-800-745-8008

www.meas-spec.com

measurement SPECIALTIES

Effective: August 1st, 2008

Typical Applications for Piezo Film Sensors

Accelerometer
- ACH-01 (General Purpose)
  - -Motion (Theft) Sensors
  - -Shipping Damage
  - -Machinery Monitoring
  - -Motional Feedback for Speakers
  - -Appliance Monitoring
- ACH04-08 (Multi-Axis)
  - -Disc Drive Shock Sensing
  - -Impact Switching
  - -Seismic
  - -Biomedical Monitoring

Vibration/Motion Film Sensor

DT Series (Unlaminated, Unshielded)
- -Dynamic Strain Gages
- -Acoustic Pickups
- -Musical Instrument Triggers
- -Tamper Detection

LDT Series (Laminated, Unshielded) & LDTC
- -Antitheft Alarm
- -Vending
  - • Dispensing Verification
  - • Coin Drop Counters
  - • Antitamper
  - • Penetration Panels
- -Fan Failure
- -Application Monitoring
  - -Washer Imbalance
  - -Microwave - Sound Pickup
  - -Dishwasher Spray Arm
  - -Water Flow Sensor
  - -Vacuum Soil Sensing

SDT Series (Unlaminated, Shielded)
- -Musical Instrument Triggers
- -Contact Microphones

Custom Sensors
- -Textile Sensors
- -Medical Monitoring
  - • Patient Bed Monitor
  - • Pulse Counter
  - • Fetal Heart Monitor
  - • Apnea Monitoring
  - • Anesthesia Monitor (Sleep Disorder)
  - • Respitory Air Flow
  - • Sleep Disorder (REM)
  - • Pacemaker Activity Monitor
- -Penetration/Antitamper Panels
  - • PCMCIA Cards
  - • Data Storage Devises

Effective: August 1st, 2008

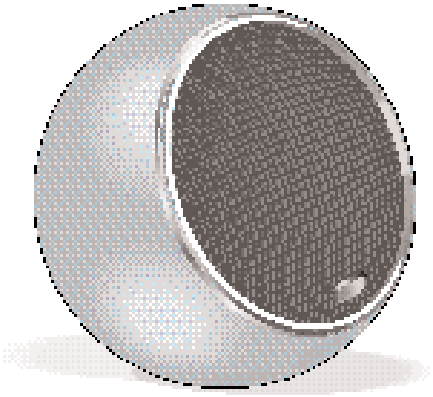

Audio/Acoustic
- -Microphones
  - •Dive Helmets
  - •Gas Mask
  - •Contact
- -Stethoscope
- -Acoustic Pickups
- -Flow Sensors
- -Speakers
  - •Novelty Consumer
  - •Tweeters
  - •Pagers

Ultrasound (40 kHz & 80 KHz)
- -Air-Ranging Proximity
- -Medical Imaging Catheters
- -Phased Array
- -Acoustic Emission
- -Level Sensors (Inkjet, toner)
- -Robotic Tactile Sensors
- -Variable Force Sensors
- -Digitizers

Switch

SW100 Series
- -Pinball Impact Switches
- - Gaming Machine Switches
- - Utility Meter Counters

Custom Switches
- -Vector Switch/Joystick
- - CMOS Circuit Wake-Up Switch
- -Pacinko Game
- -Electronic Piano Keys
- -Impact Printer Timing Switch
- -Sports Target (Impact)
- -Snap Action Switches
- -Beam Switch

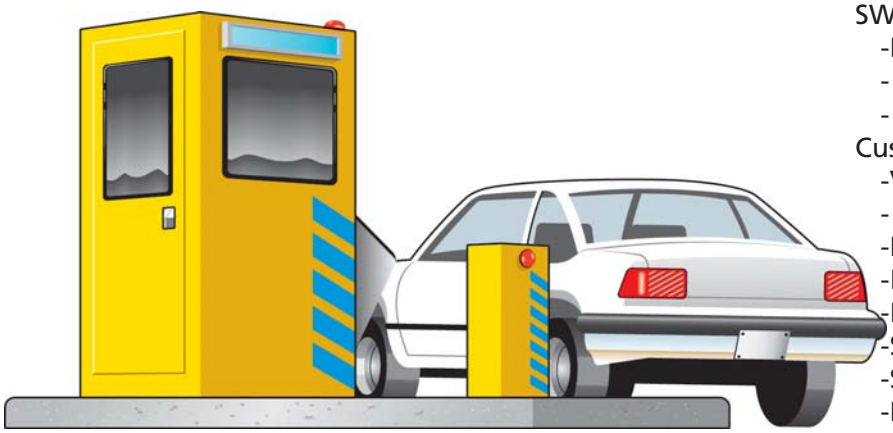

Piezo Cable
- -Step Switches
- -Pedestrian Safety Mats (Fence & Buried)
- -Perimeter Security
- -Antitamper

Traffic Sensors

Series BL
- -Vehicle Classification
- -Weight-in-Motion
- -Speed/Red Light Enforcement
- -Airport Taxiway
- -Security/Safety

Effective: August 1st, 2008

Metallized Piezo Film Sheets

Piezo film is available in a variety of different film sizes and thicknesses. These can be fabricated into simple transducers, or for use as full size sheets for applications such as speakers.

Piezo Film is available in different thicknesses. Thinner films (28 and 52 µm) are the most common, due to their higher capacitance and good mechanical qualities. Thicker film (110 µm) is used where maximum robustness is needed, or if the sensor is being used in a thickness mode (d_{33}) application.

Metallization options include a compliant silver ink as well as sputtered metallization. The silver ink is best for applications where mechanical stress is being applied. Silver ink lends itself to custom metallization patterns for easy lead attachment.

Thin sputtered metallization is brittle and used where signal to noise requirements dictate very low mass loading by the electrodes. Our standard sputtered metallization is 700Å of copper covered with 100Å of nickel change NiCu Alloy to Cu with Ni, which has good conductivity and is resistant to oxidation. Other metallizations such as gold are available on a custom basis with a set up fee. For the sputtered metallized film, there is no border.

These are only general rules, and a discussion with our applications engineers will help you to make the best choice for your specific application.

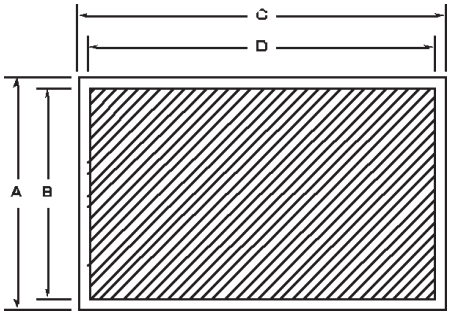

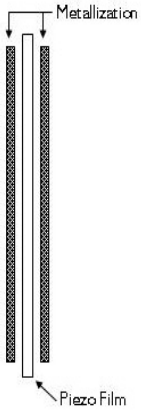

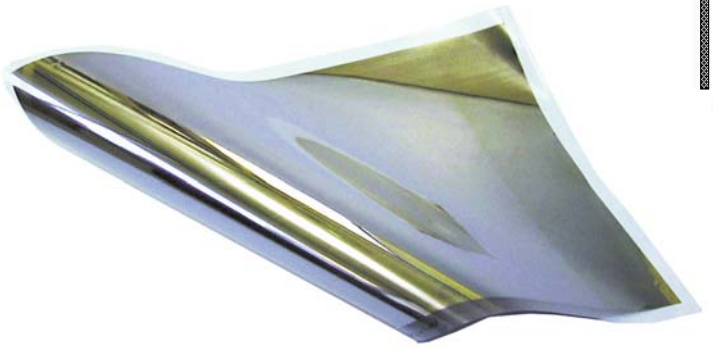

DIMENSIONS in INCHES (mm)

Description	A Film	B Electrode	C Film	D Electrode	t (µm)	Metallization	Part Number
28 µm piezo film	8.00 (203)	8.00 (190)	11.00 (280)	11.00 (267)	28	Cu-Ni	1-1003702-7
28 µm piezo film	8.00 (203)	7.50 (190)	5.50 (140)	5.00 (127)	40	Silver Ink	1-1004347-0
28 µm piezo film	8.00 (203)	7.50 (190)	11.00 (280)	10.50 (267)	40	Silver Ink	1-1004346-0
52 µm piezo film	8.00 (203)	8.00 (190)	11.00 (280)	11.00 (267)	52	Cu-Ni	2-1003702-7
52 µm piezo film	8.00 (203)	7.50 (190)	5.50 (140)	5.00 (127)	64	Silver Ink	2-1004347-0
52 µm piezo film	8.00 (203)	7.50 (190)	11.00 (280)	10.50 (267)	64	Silver Ink	2-1004346-0
110 µm piezo film	8.00 (203)	8.00 (190)	11.00 (280)	11.00 (267)	110	Cu-Ni	3-1003702-7
110 µm piezo film	8.00 (203)	7.50 (190)	5.50 (140)	5.00 (127)	122	Silver Ink	3-1004347-0
110 µm piezo film	8.00 (203)	7.50 (190)	11.00 (280)	10.50 (267)	122	Silver Ink	3-1004346-0

Effective: August 1st, 2008

Please contact the factory for pricing and custom part quotations.
800.745.8008

DT Series Elements

The DT series of piezo film sensors elements are rectangular elements of piezo film with silver ink screen printed electrodes. They are available in a variety of different sizes and thicknesses.

The DT film element produces more than 10 millivolts per microstrain, about 60 dB higher than the voltage output of a foil strain gage. The capacitance is proportional to the area and inversely proportional to the thickness of the element.

The DT series sensors are the simplest form of piezo film sensors, used primarily as dynamic strain gages and contact microphones for vibration or impact detection. These are available without any leads for those applications where the customer wants to make his own lead attachment. They can be readily adhered to a surface with double-sided tape or epoxy. Lead attachment can be achieved by compressive clamping, crimps, eyelets, conductive epoxy or low temperature solders.

DT elements are supplied with a thin urethane coating over the active sensor area; the lead attachment legs are free of the insulating urethane coating.

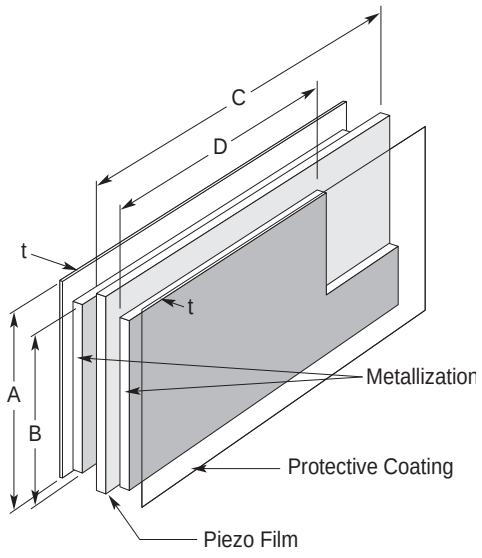

DIMENSIONS in INCHES (mm)

Description	A Film	B Electrode	C Film	D Electrode	t (µm)	Cap (nF)	Part Number
DT1-028K	.64 (16)	.484 (12)	1.63 (41)	1.19 (30)	40	1.38	1-1002608-0
DT1-052K	.64 (16)	.484 (12)	1.63 (41)	1.19 (30)	64	.740	2-1002608-0
DT2-028K	.64 (16)	.484 (12)	2.86 (73)	2.42 (62)	40	2.78	1-1002145-0
DT2-052K	.64 (16)	.484 (12)	2.86 (73)	2.42 (62)	64	1.44	2-1002145-0
DT4-028K	.86 (22)	.740 (19)	6.72 (171)	6.13 (156)	40	11.00	1-1002149-0
DT4-052K	.86 (22)	.740 (19)	6.72 (171)	6.13 (156)	64	5.70	2-1002149-0

Effective: August 1st, 2008

Please contact the factory for pricing and custom part quotations.
800.745.8008

DT Series Elements with Lead Attachment

The DT series of piezo film sensors elements are rectangular elements of piezo film with silver ink screen printed electrodes. They are available in a variety of different sizes and thicknesses.

Lead attachment is accomplished using a riveted lug going to 12" (300 mm) of 28 AWG wire.

The DT film element produces more then 10 millivolts per micro-strain. The capacitance is proportional to the area and inversely proportional to the thickness of the element.

The DT elements are supplied with a thin urethane coating over the active electrode area to prevent oxidation to the top surface of the silver ink.

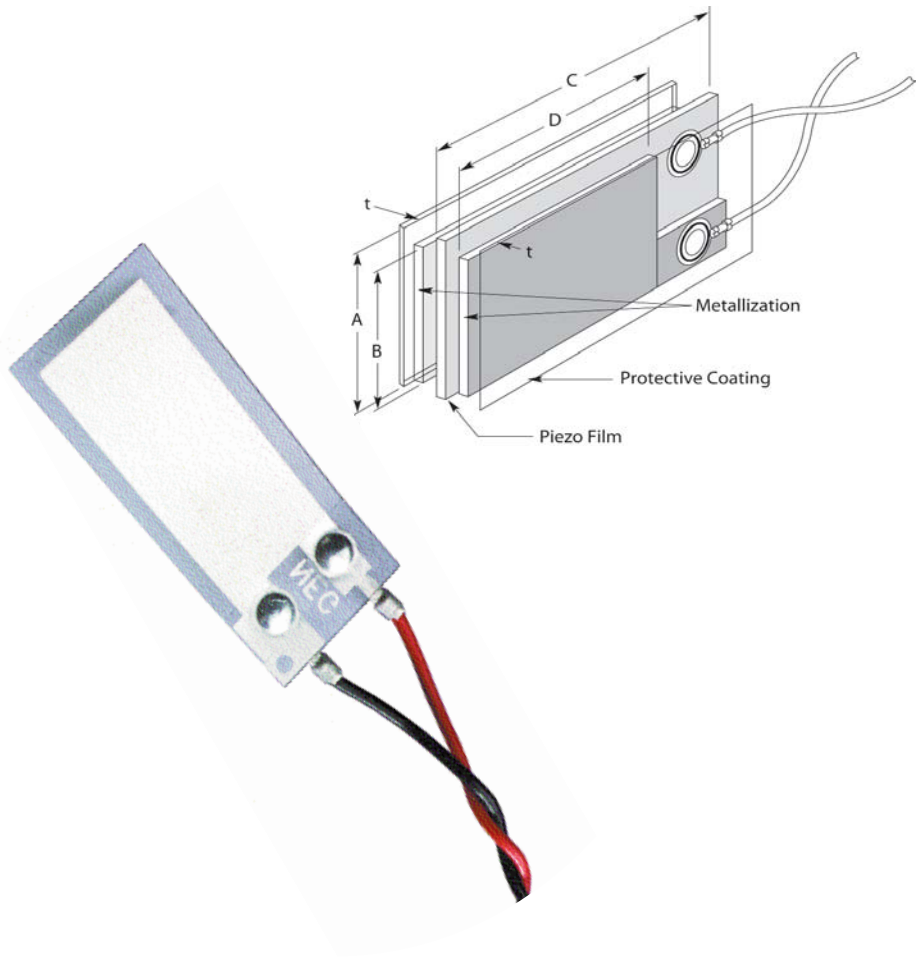

DIMENSIONS in INCHES (mm)

Description	A Film	B Electrode	C Film	D Electrode	t (µm)	Cap (nF)	Part Number
DT1-028K/L w/rivets	.64 (16)	.484 (12)	1.63 (41)	1.19 (30)	40	1.38	1-1002908-0
DT1-052K/L w/rivets	.64 (16)	.484 (12)	1.63 (41)	1.19 (30)	64	.740	2-1002908-0
DT2-028K/L w/rivets	.64 (16)	.484 (12)	2.86 (73)	2.42 (62)	40	2.78	1-1003744-0
DT2-052K/L w/rivets	.64 (16)	.484 (12)	2.86 (73)	2.42 (62)	64	1.44	2-1003744-0
DT4-028K/L w/rivets	.86 (22)	.740 (19)	6.72 (171)	6.13 (156)	40	11.00	1-1002150-0
DT4-052K/L w/rivets	.86 (22)	.740 (19)	6.72 (171)	6.13 (156)	64	5.70	2-1002150-0

Effective: August 1st, 2008

Please contact the factory for pricing and custom part quotations.
800.745.8008

LDT Series Elements
with Lead Attachment and Lamination

The 'L' in LDT stands for 'laminated' sensor. Typically, a 0.005" (125µm) polyester layer is laminated to a 28 µm or 52µm piezo film element. When used in a 'bending' mode, laminated film elements develop much higher voltage output when flexed than a non-laminated DT elements series. The neutral axis is in the laminate instead of in the film so the film is strained more when flexed.

The capacitance is proportional to the area and inversely proportional to the thickness of the element.

Piezo film sensors LDT elements are available in a variety of lead attachment options. For significantly increased sensitivity, the LDTM-028K (M-Mass) combines an LDT0-028K form factor with the addition of a 0.72 gram round mass. The LDT1, 2 and 4 have 12" of 26 gauge twisted pair wire.

The LDT0-028K and LDTM-028K with solder tabs can be soldered directly to a PCB with a reasonable level of care. Piezo film cannot withstand high temperatures (>80°C), and therefore soldering of the pins to a PCB must be done quickly. A heatsink clamped to the interface area between the film and the crimps will take the heat away from the film. Pre-tin the PCB and then quickly solder the sensor to the board. Do not allow the soldering iron to touch the film, and do not use a dwell time of over 5 seconds on the pins. Low temperature solders can also be used.

Applications for this include beam-type vibration sensors for vehicle alarms and solid state switches for counters and momentary closure type switches.

For tightly tolerance sensitivity requirements, please consult MEAS Sensors for techniques used to control variations of boundary conditions in production.

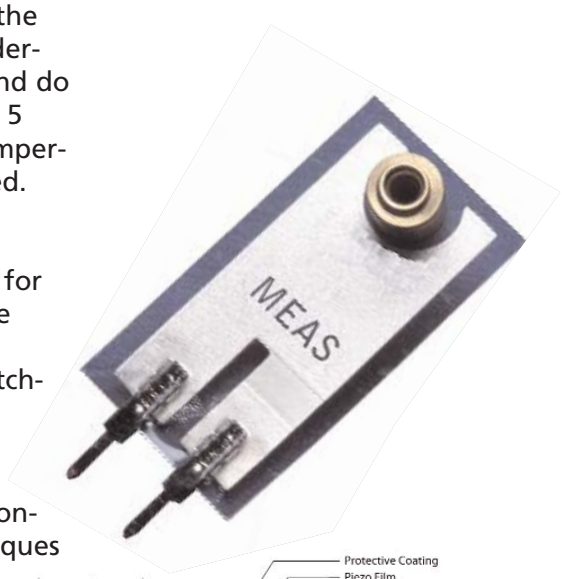

(LDT Series with rivets & wire leads)

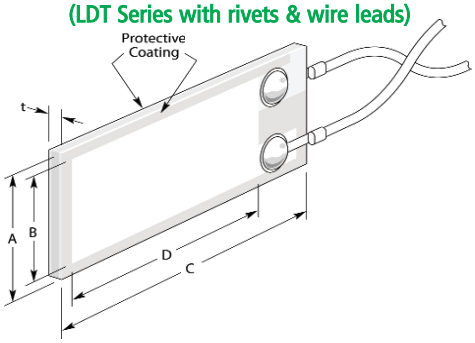

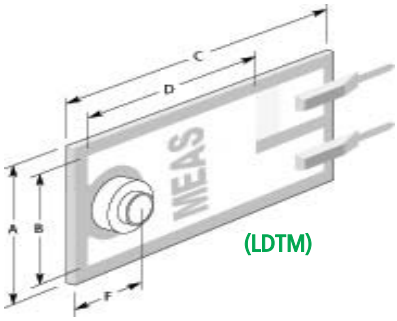

(LDTM)

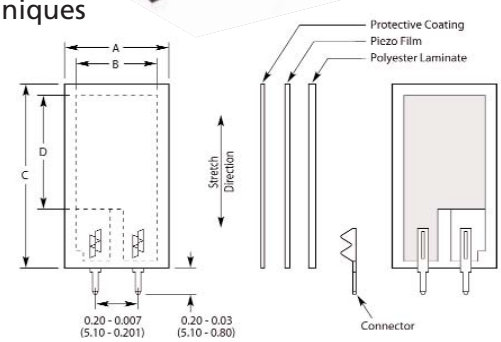

(LDTO-028K with crimped-on solder tabs)

DIMENSIONS in INCHES (mm)

Description	A Film	B Electrode	C Film	D Electrode	t (µm)	Cap (nF)	Part Number
LDT0-028K/L w/crimps	.520 (13)	.400 (10)	.980 (25)	.580 (14.70)	205	.500	1002794
LDT1-028K/L w/rivets	.640 (16)	.484 (12)	1.63 (41)	1.19 (30.17)	205	1.38	1-1002910-0
LDT2-028K/L w/rivets	.640 (16)	.484 (12)	2.86 (72)	2.42(61.47)	205	2.78	1-1003745-0
LDT4-028K/L w/rivets	.860 (21)	.740 (18)	6.72 (170)	6.13 (155.70)	205	11.0	1-1002405-0
LDTM-028K/L w/crimps	.520 (13)	.400 (10)	.980 (25)	.580 (14.70)	205	.420	1005447-1

Effective: August 1st, 2008

Please contact the factory for pricing and custom part quotations.
800.745.8008

FDT Series Elements
with Lead Attachment

The "F" in FDT Series stands for 'Flexible Leads'. These are rectangle elements of piezo film with silver ink screen printed electrodes. Rather than making the lead attachment near the sensor, the piezo polymer tail extends from the active sensor area as flex circuit material with offset traces. This gives a very flat, flexible lead, with a connector at the end.

The FDT elements are available in a variety of different sizes and thicknesses. They are available without a laminate (FDT), with a laminated (0.005" mylar) on one side (FLDT) or with tape release layer adhesive (FDT with adh) in the sensor area.

The connector pins on the FDT sensors can be directly soldered to a PCB with a reasonable level of care. This component cannot withstand high temperatures (> 80°C), and therefore coldering of the pins to a PCB must be done quickly. A heatsink clamped to the interface area between the film and the crimps will take the heat away from the film. Pre-tin the pins and then quickly solder them to the board. Do not allow the soldering iron to touch the film, and do not use a dwell time of over 5 seconds on the pins. Low temperature solder can also be used.

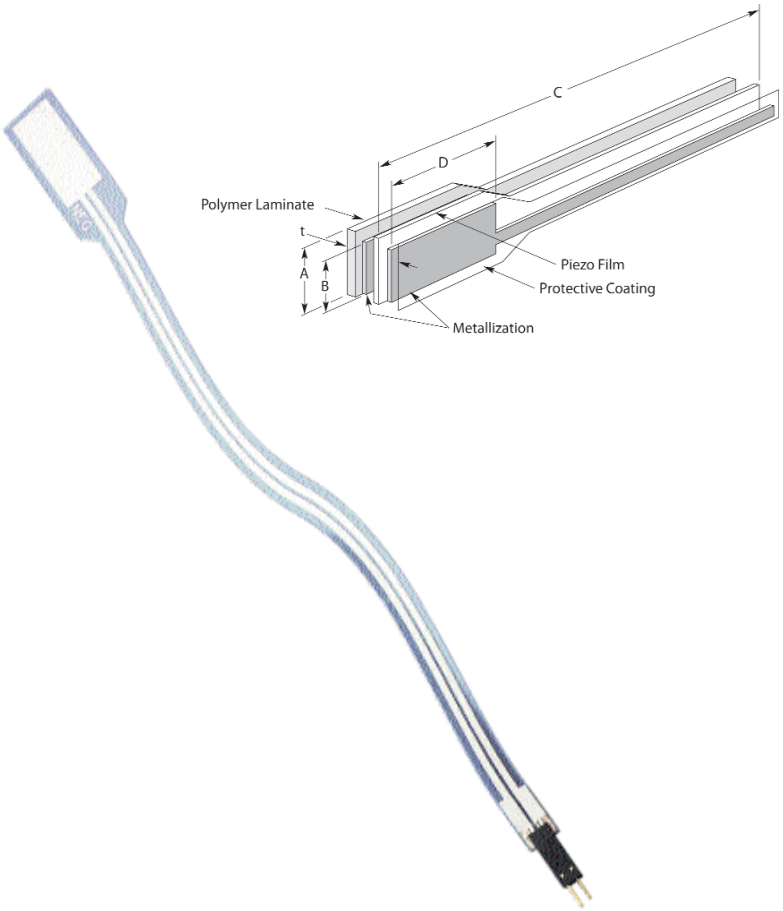

DIMENSIONS in INCHES (mm)

Description	A Film	B Electrode	C Film	D Electrode	t (µm)	Cap (nF)	Part Number
FDT1-028K	.620 (16)	.485 (12)	9.25 [235]	1.16 (30)	55	1.37	1-1002785-1
FDT1-052K	.620 (16)	.485 (12)	9.25 [235]	1.16 (30)	85	.740	2-1002785-1
FLDT1-028K	.620 (16)	.485 (12)	9.25 [235]	1.16 (30)	205	1.37	1-1002786-1
FLDT1-052K	.620 (16)	.485 (12)	9.25 [235]	1.16 (30)	230	.740	2-1002786-1
FLDT1-028K w/adh-F	.650 (17)	.485 (12)	5.51 [140]	1.18 (30)	125	1.37	1001777

Effective: August 1st, 2008

Please contact the factory for pricing and custom part quotations.
800.745.8008

SDT Shielded Piezo Sensors Element
with Shielded Cable

The 'S' in SDT Series stands for 'Shielded Sensor'. SDT1 piezo film sensors consist of a rectangular element of piezo film together with a molded plastic housing and 18" of coaxial cable. The film element, screen printed with silver ink, is folded over on itself, given a self-shielding of the transducer area. This is important in applications in high EMI environments.

The SDT1 can be adhered to other surfaces using double sided adhesives, epoxy or cyanoacrylate (super-glue). Care should be taken if the sensor is to be removed, as the double-side adhesive can peel the metallization from the film.

When adhered to a surface in this manner, the SDT1 is an excellent contact microphone or dynamic strain gage. The output from the SDT1 can input directly to an oscilloscope or a signal analyzer.

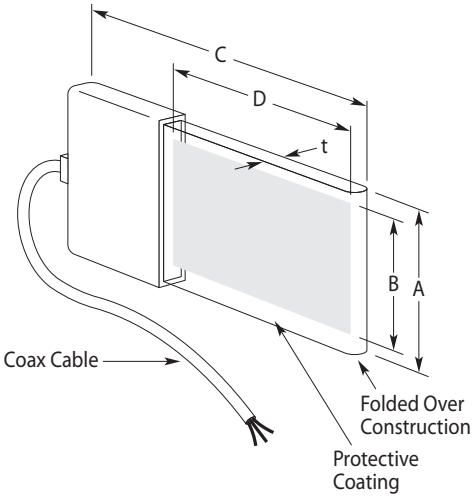

DIMENSIONS in INCHES (mm)

Description	A Film	B Electrode	C Film	D Electrode	t (µm)	Cap (nF)	Part Number
SDT1-028K	.640 (16)	.520 (13)	1.64 (41)	1.18 (30)	75	2.78	1-1000288-0

Effective: August 1st, 2008

Please contact the factory for pricing and custom part quotations.
800.745.8008

Piezo Film Solid State Switches

Piezo film's capabilities to generate a high voltage output under bending strain, combined with its rugged form factor, make it an ideal candidate for solid state impact switches. Rather than using a switch contact closure, the piezo film generates a pulse which is detected by electronics. Although many of the DT's, LDT's and FLDT's supplied by MEAS are used for switch applications, it is sometimes convenient to have a switch with integrated electronics.

The SW100 is an ideal configuration for impact detection and momentary switch applications. A direct contact force on the tip of the stainless steel cantilever beam of the SW100 induces strain on the laminated Piezo Film Sensor (PFS) element. With dynamic strain, the PFS element generates an output that activates a built-in, normally-open circuit. Once activated, the circuit resembles the closure of a contact switch, but without the inherent discontinuity that contact points exhibit because of corrosion, pitting and bouncing.

Thus the SW100 provides a single digital pulse that is ideal for triggering digital circuits and signal processing. The imperviousness, elasticity and reliability of the PFS element, along with the noise rejection characteristics of the circuit, combine to provide the SW100 with features that suit applications demanding consistent, reliable performance throughout tens of millions of switching cycles.

Custom options are available to fit specific customer applications. For more information on the SW100, please call one of our applications engineers.

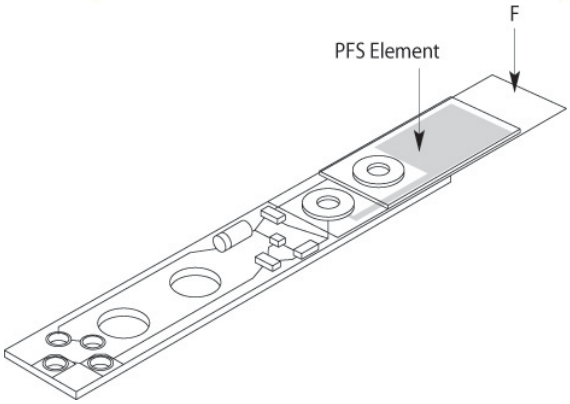

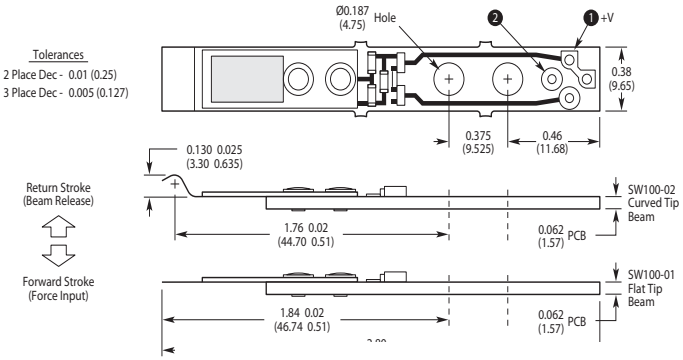

DIMENSIONS in INCHES (mm)

Description	Beam Tip	Stroke Direction to Trigger Switch	Part Number
SW100-01-R	Flat	Reversed	1002393-1
SW100-01-F	Flat	Forward	1002393-2
SW100-02-R	Curved	Reversed	1002132-1
SW100-02-F	Curved	Forward	1002132-2

Effective: August 1st, 2008

Please contact the factory for pricing and custom part quotations.
800.745.8008

Piezo Polymer Coaxial Cable

Piezo cable is another form for piezo polymer sensors. Designed as a coax cable, the piezo polymer is the "dielectric" between the center core and the outer braid. When the cable is compressed or stretched, a charge or voltage is generated proportional to the stress.

Piezo cable has a number of advantages in certain applications. Due to its coaxial design, the cable is self-shielded, allowing its use in a high EMI environment. The piezo cable can be spliced to passive coax, using standard coax splice techniques. It is extremely rugged, and will stand up to heavy loads as with truck axle counting. Its linear format makes it ideal for monitoring large areas. Two versions of the piezo cable are offered, copolymer and spiral.

Detailed specification sheets are available on our website: www.meas-spec.com.

Continuous lengths of piezo cable is available in a variety of different gages and construction formats. As a standard product, it is offered as a 20 AWG center core with a polyethylene outer jacket.

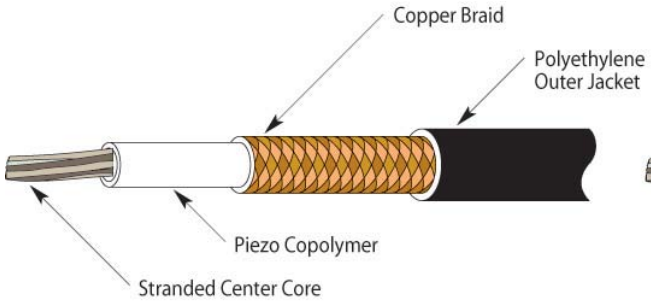

20AWG Cable-Copolymer

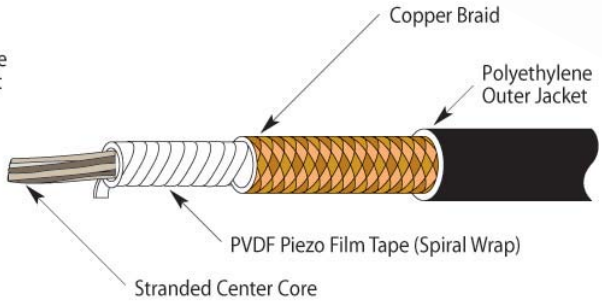

20AWG Cable-Spiral Wrap

DIMENSIONS in INCHES (mm)

Description	Dimensions Center Core	Dimensions Outside Dia.	Capacitance pF/ft (pF/m)	Part Number
AWG Piezo Cable (copolymer)	.040 (1.02)	.107 (2.72)	200 (655)	1005646-1
AWG Piezo Cable (spiral)	.040 (1.02)	.105 (2.67)	279 (980)	1005801-1

Effective: August 1st, 2008

Please contact the factory for pricing and custom part quotations.
800.745.8008

Traffic Sensors

The Roadtrax BL Traffic Sensor is designed for Permanent or Temporary installation into or onto the road surface for the collection of traffic data.

The unique construction of the sensor allows it to be installed directly into the road and a flexible format so that it can conform to the profile of the road. the flat construction of the sensor gives an inherent rejection of road noise due to road bending, adjacent lanes, and bow waves of approaching vehicles.

The small cut in the road minimizes the damage done to the road, speeds up the installation and reduces the amount of epoxy used for the installation.

The Roadtrax BL sensor is available both as a Class I sensor for the highest level of uniformity needed for Weigh in Motion applications and as a Class II sensor which is more cost effective for Counting, Classifying, High speed Toll Booths, Speed Detections, and Red Light Cameras.

- Uniform, high amplitude piezoelectronic output compatible with existing counters and classifiers on the market.
- Excellent Signal to Noise Ration which has an inherent 10:1 rejection of road noise due to road bending, adjacent lanes and bow waves of approaching vehicles.
- Easy installation in a 3/4" x 1" slot, which minimizes the disturbance of the road, decreases the depth of the road cut, and minimizes the amount of epoxy needed.
- Flexible sensor - conforms to any road profile while maintaining a uniform distance to the road surface.
- The final installation is flush with the road surface - snowplows will not do damage to the sensor.
- Durable enough to withstand normal installation handling and hundreds of millions ESAL's.
- All sensors are 100% tested and certified for performance as a complete sensor prior to shipment.
- Custom Passive Signal Cable with High Density Polyethylene Jacket which is rated for direct burial and resists nicks and cuts.
- Class II sensors are tested to ±20% uniformity; Class I (WIM) are tested to ±7% uniformity.

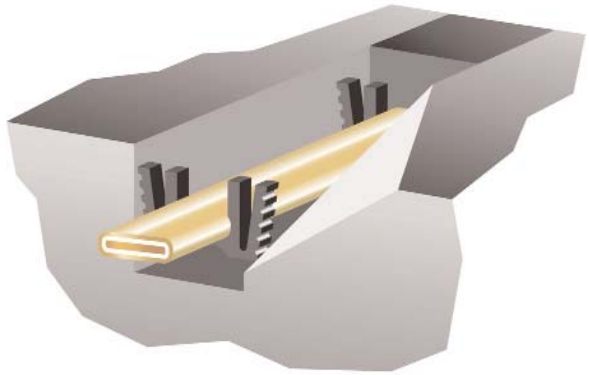

Permanent In-The-Road Installation

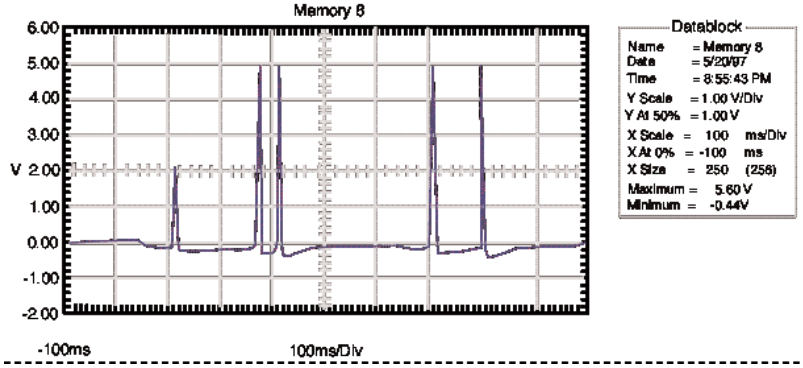

Many additional sensor lengths and cable lengths are available

Description	Part #
6' BL Class II w/100'	1005333-1
8' BL Class II w/100'	1-1005333-1
10' BL Class II w/100'	3-1005333-1
11' BL Class II w/100'	4-1005333-1
12' BL Class II w/100'	5-1005333-1
6' BL WIM w/100'	1-1005438-1
8' BL WIM w/100'	2-1005438-1
10' BL WIM w/100'	4-1005438-1
11' BL WIM w/100'	5-1005438-1
12' BL WIM w/100'	6-1005438-1
Extra Cable (50' increments only)	1004552

Effective: August 1st, 2008

Please contact the factory for pricing and custom part quotations.
800.745.8008

Accelerometers

The MEAS family of accelerometers addresses a wide range of application needs. The ACH-01 is a general purpose, low xost, linear single axis accelerometer for a variety of monitoring applications.

The MEAS family of accelerometers have opened new doors to the design engineer who needs to continuously monitor vibration, shock and acceleration. Detailed specification sheets are available from our website.

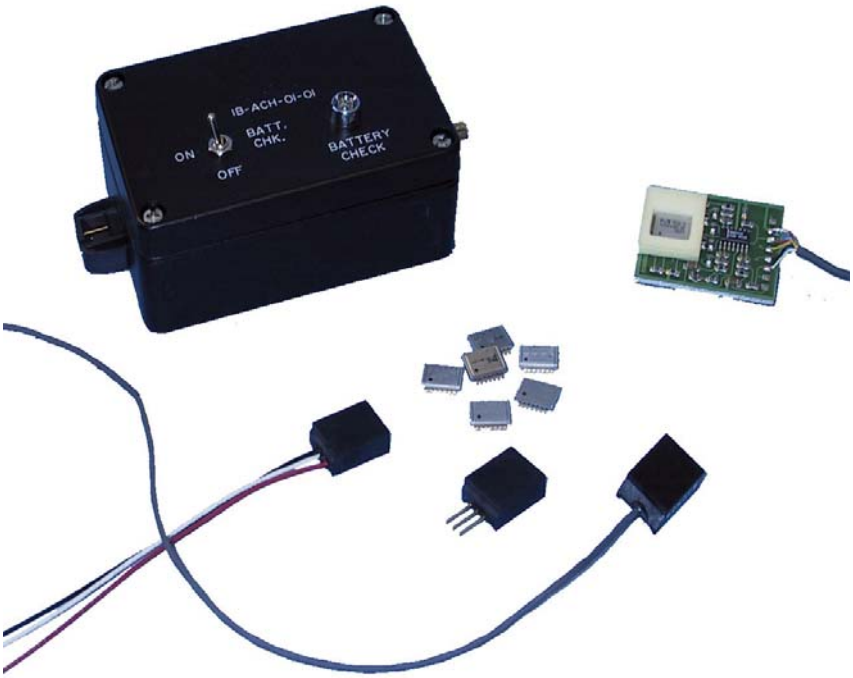

MEAS Accelerometers

	Applications	Features	Benefits
ACH-01-XX	• Car alarms	• Lower power	• High performance/price ratio
	• Motional feedback for speakers	• Low cost	• Low impedance output for simplified user interface
	• Integrated motor vibration monitor	• Single axis	• Very rugged to reduce failures
	• Appliance vibration monitoring	• Wide frequency response	• Ability to easily measure high frequency events
	• Shipping damage recorder	• Large dynamic range	• Low noise - High output
	• Musical instrument pickups	• Small, lightweight	
		• Buffered electronics output	

Effective: August 1st, 2008

Please contact the factory for pricing and custom part quotations.
800.745.8008

Production Qualified Accelerometers

		ACH-01-XX
Key Features		-Wide Frequency Range -Wide Dynamic Range -High Sensitivity -Low Noise -JFET Buffer
Sensitive Axes:	X-Axis	---
	Y-Axis	---
	Z-Axis	X
Sensitivity		10 m V/g
Frequency Range (±3 dB)		1.0 Hz-20 kHz
Dynamic Range		±250 g
Resolution (@ 100 Hz)		40μg $\sqrt{\text{Hz}}$
Resonant Frequency		>35 kHz
Resonant Q (Hz/Hz)		30
Transverse Sensitivity		5%
Linearity		0.1%
Operating Temperature		-40°C to +85°C
Storage Temperature		-40°C to +85°C
Maximum Shock		1000g
Supply Voltage3 V to 40 V		3 V to 40 V
Supply Current (mA)		2 μ A Typical
Weight		3 grams
Size (mm)		13 x 19 x 6
Mounting Method		Adhesive

Effective: August 1st, 2008

Please contact the factory for pricing and custom part quotations.
800.745.8008

ACH-01 (General Purpose)

The ACH-01 is an inexpensive, robust, general purpose accelerometer with outstanding performance characteristics. The use of piezoelectric film in the ACH-01 provides many cost/performance advantages allowing it to be used in a wide range of applications where the use of traditional accelerometer technology is impractical. It is specifically designed for high volume applications that require the permanent installation of an accelerometer, such as machine health monitoring, modal analysis, automotive sensors, appliances, and feedback control systems.

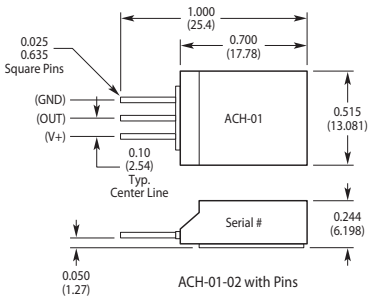

ACH-01-02 with Pins

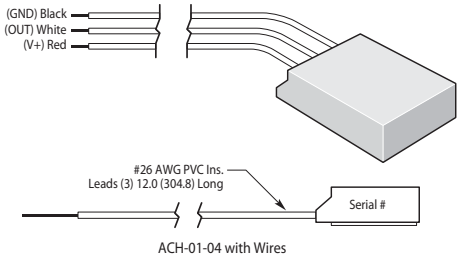

ACH-01-04 with Wires

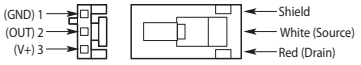

Connector Detail

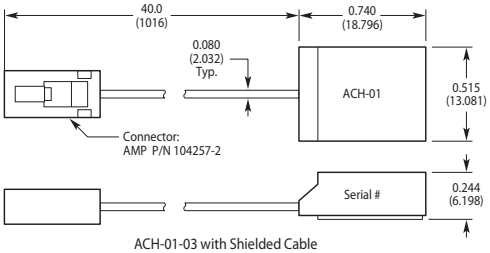

ACH-01-03 with Shielded Cable

FEATURES

- Wide Frequency Response
- Excellent Phase Response
- Wide Temperature Range
- Wide Dynamic Range
- Small Temperature Dependence
- Low Cost
- Large Supply Voltage Range
- Excellent Linearity
- Low Impedance Output
- Very high Resonance
- Electrically Isolated Base
- Low Mechanical Q
- Low Transverse Sensitivity

Description	Cable Configuration	Part Number
ACH01-02/10	3 Pins; 0.25" square	1000985
ACH01-03/10	40" coax cable with female connector	1-1001220-0
ACH01-04/10	Wires	1-1001497-0

Effective: August 1st, 2008

Please contact the factory for pricing and custom part quotations.
800.745.8008

IB-ACH-01 (Amplifier Box)

MEAS has developed this low cost interface amplifier specifically for use with the IB-ACH-01. It is designed to mate directly to the connector supplied with the ACH-01-03 assembly. For use with either the ACH-01-02 or ACH-01-04, an adapter is required to interface the two components.

Characteristics	IB-ACH-01
Gain	10 X
Low Frequency Filter	-3dB @ 2 kHz, fixed
High Frequency Filter	+3dB @ 30 kHz, fixed
Power Supply	One 9 Volt Battery
Input Interface	FET for IB-ACH-01
Supply Current	4.0 mA
Battery Life	80 Hours
Low Battery Cutoff	7.2 V
Output Impedance	100 Ohm
Output Connector	BNC

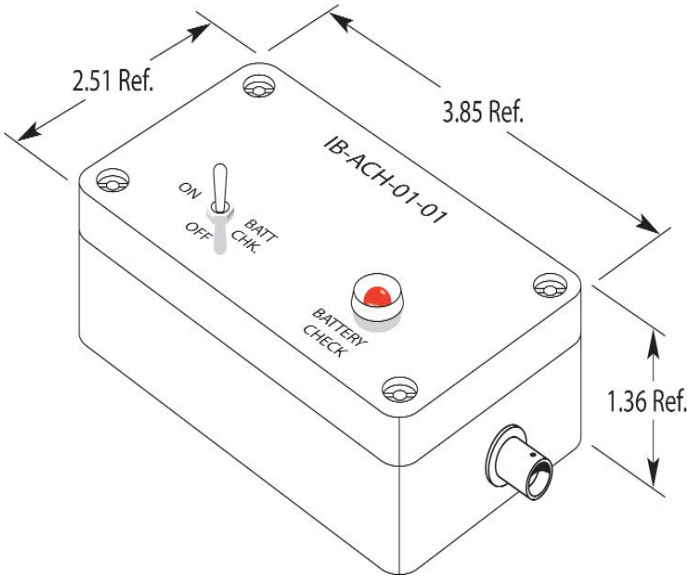

Description	Part Number
IB-ACH-01	1003058

Effective: August 1st, 2008

Please contact the factory for pricing and custom part quotations.
800.745.8008

40kHz Omni Directional Ultrasound Transmitters
40kHZ Wide Angle Ultrasound Receivers

Piezoelectric film (PVDF) ultrasound transmitter and receivers offer unique advantages for air ranging applications.

Depending on the applications, resonance frequency and vertical beam directivity of the transmitter and receiver can easily be customized by changing the diameter and length of the PVDF cylinder. The receiver has a very wide horizontal beam angle and it can be reduced by changing the housing design if necessary.

PVDF transmitters and receivers also have very low resonance Q value of 5 and PVDF receivers have Q value of 4. This means that the rising time and the signal decay time are much faster than the conventional ceramic transmitters. This characteristic is suitable for high speed data acquisition or high speed digitizer applications.

Cylindrical 40kHz PVDF transmitters exhibit omni-directional horizontal beam directivity and broad band characteristics.
Cylindrical 40kHz PVDF receivers exhibit very wide horizontal beam directivity and broad band characteristics. These characteristics lend unique solutions in many applications such as two-dimensional positioning, digitizer, object detection, and distance measurement.

A test board, consisting of snap-in mount holes and test pins, is available for easy evaluation of the 40kHz transmitters. A preamplifier is available for easy evaluation of the 40kHz receivers.

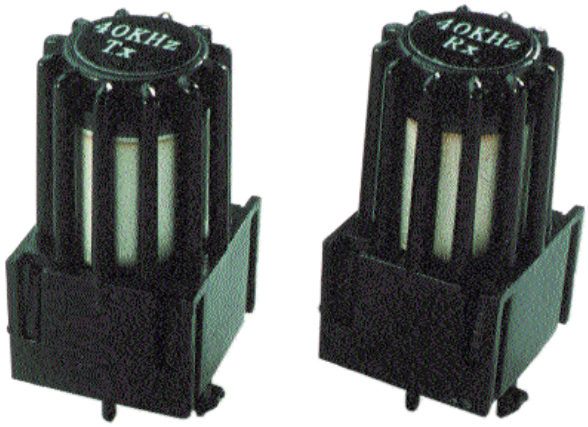

FEATURES

- Omni-directional horizontal beam directivity
- Broad band
- Low resonance Q
- Excellent impact resistance
- Low Cost
- Light Weight

Description	Part Number
40 kHz Transmitter	1005853-1
Test Board (for Transmitter)	1005854-1
Drive Electronics (for Transmitter)	1005855-1
40 kHz Receiver	1005856-1
Preamplifier Board (for Receiver)	1005857-1

Effective: August 1st, 2008

Please contact the factory for pricing and custom part quotations.
800.745.8008

80 kHz Cylindrical Ultrasound Transducer

US80KS-01

Piezoelectric film (PVDF) ultrasound transducers offer unique advantages for air ranging applications. Cylindrical 80kHz PVDF transducers exhibit omni-directional horizontal beam directivity and broadband characteristics. These characteristics lend unique solutions in many applications such as two-dimensional positioning, digitizer, object detection, and distance measurement. Depending on the applications, resonance frequency and vertical beam directivity can easily be customized by changing the diameter and length of the PVDF cylinder. PVDF ultrasound transducers also have very low resonance "Q" values. This means that the signal rise and decay times are much shorter than conventional ceramic ultrasound transducers. This characteristic is ideal for positioning applications.

Outline Mechanical Dimensions

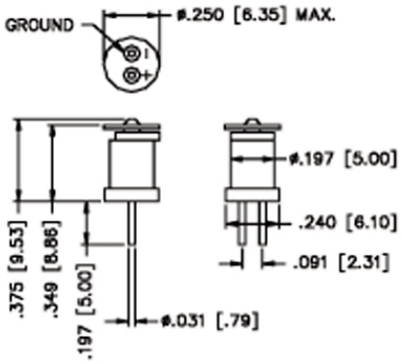

SPECIFICATIONS

Characteristics	Transmitter Mode	Receiver Mode	Units
PVDF Thickness	30	30	µm
Resonance Frequency	80 - 90	80 - 90	kHz
Resonance Q	4 - 8	6 - 9	
Sound Pressure Output	6 102		mPa/V dB
Sensitivity		0.3 -90	mV/Pa dB
Horizontal Beam Directivity	360	360	Degree
Vertical Beam Directivity	±25	±25	Degree
Capacitance	200	200	pF
Drive voltage	max 400 max 100		Vp
Storage Temperature	-20 to +85	-20 to +85	°C
Operating Temperature	+5 to +60	+5 to +60	°C

Description	Part Number
80kHz Cylindrical	1005919-1

Effective: August 1st, 2008

Please contact the factory for pricing and custom part quotations.
800.745.8008

Pen Tip Assembly
PT80KHZ-01

Piezoelectric film (PVDF) ultrasonic transducer, wide angle GaAs IrLEDs, flexible printed-circuit strip, and plastic tip guard assembly, for use in digitizer pen applications. The cylindrical transducer gives full 360° horizontal directivity and broad bandwidth in a very compact format.

Pen Tip Assembly PT80KHZ-01 is well matched to Shielded Receiver Assembly SR80KHZ-01 (part no. 1007090-1).

Outline Mechanical Dimensions

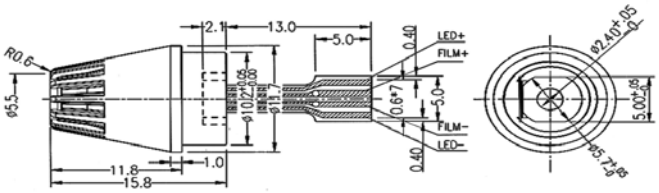

TRANSMITTER SPECIFICATIONS

Parameter	Typical Value, at T_A = 25 °C	Units	Notes
Operating Frequency	80 - 90	kHz	
Resonance Q	6 - 9	(none)	to –3 dB frequencies
Sound Pressure Output	8	mPa/V	@ 30 cm, 16-cycle sine burst
Sound Pressure Level	101	dB	re 20 µPa, @ 30 cm, @ 400 V_{p-p} 16-cycle sine burst
Signal Output	4	mV	@ 800 V_{p-p} decaying sine drive, using SR80KHZ-01, @ 30 cm, gain +26 dB, 2nd positive peak
Horizontal Beam Directivity	360	degrees	
Vertical Beam Directivity	> 90	degrees	to –6 dB level
Capacitance (at resonance)	166	pF	
Absolute Maximum Ratings at T_A = 25 °C			
Drive Voltage (burst mode)	800	V_{p-p}	
Drive Voltage (continuous)	200	V_{p-p}	
Storage Temperature	-20 to +80	°C	
Operating Temperature	+5 to +60	°C	

Description	Part Number
Pen Tip Assembly	1007089-1

Effective: August 1st, 2008

Please contact the factory for pricing and custom part quotations.
800.745.8008

Shielded Receiver Assembly
SR80KHZ-01

Piezoelectiric film (PVDF) ultrasound transducers offer unique advantages for air ranging applications. Cylindrical PVDF transducers exhibit wide-angle horizontal beam directivity and broadband characteristics. These characteristics lend unique solutions in many applications such as two-dimentional positioning, digitizer, object detection, and distance measurement. PVDF ultrasound transducers also have very low resonance "Q" values. This means that the signal rise and decay times are much shorter than conventional ceramic ultrasound transducers. This characteristic is ideal for positioning applications.

Shielded Receiver Assembly SR80KHZ-01 is well matched to Pen Tip Assembly PT80KHZ-01 (part no. 1007089-1).

Outline Mechanical Dimensions

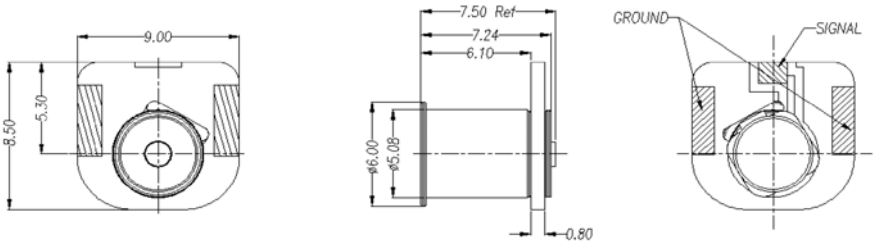

RECEIVER SPECIFICATIONS

Parameter	Typical Value, at T_A = 25 °C	Units	Notes
Operating Frequency	80 - 90	kHz	
Resonance Q	4.5 – 7	(none)	to –3 dB frequencies
Sensitivity	0.7	mV/Pa	16-cycle sine burst
	-86	dB	re 1 V/µbar, 16-cycle sine burst
Signal Output	4	mV decaying gain +26 dB, 2nd positive peak	using PT80KHZ-01, @ 800 V_{p-p} sine drive, @ 30 cm,
Horizontal Beam Directivity	>180	degrees	to –6 dB level
Vertical Beam Directivity	± 25	degrees	to –6 dB level
Capacitance (at resonance)	107	pF	
Storage Temperature	-20 to +80	°C	
Operating Temperature	+5 to +60	°C	

Description	Part Number
Shielded Receiver Assembly	1007090-1

Effective: August 1st, 2008

Please contact the factory for pricing and custom part quotations.
800.745.8008

MiniSense 100 Vibration Sensor

The MiniSense 100 is a low-cost cantilever-type vibration sensor loaded by a mass to offer high sensitivity at low frequencies. Pins are designed for easy installation and are solderable. Horizontal and vertical mounting options are offered. The active sensor area is shielded for improved RFI/EMI rejection. Rugged, flexible PVDF sensing element withstands high shock overload. Sensor has excellent linearity and dynamic range, and may be used for detecting either continuous vibration or impacts.

The mass may be modified to obtain alternative frequency response and sensitivity selection (consult factory).

The MiniSense 100 acts as a cantilever-beam accelerometer. When the beam is mounted horizontally, acceleration in the vertical plane creates bending in the beam, due to the inertia of the mass at the tip of the beam. Strain in the beam creates a piezoelectric response, which may be detected as a charge or voltage output across the electrodes of the sensor.

The sensor may be used to detect either continuous or impulsive vibration or impacts. For excitation frequencies below the resonant frequency of the sensor, the device produces a linear output governed by the "baseline" sensitivity. The sensitivity at resonance is significantly higher. Impacts containing high-frequency components will excite the resonance fre-quency, as shown in the plot above (response of MiniSense 100 to a single half-sine impulse at 100 Hz, of amplitude 0.9 g). The ability of the sensor to detect low frequency motion is strongly influenced by the external electrical circuit.

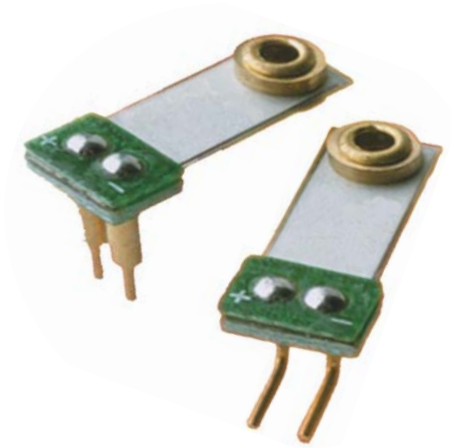

Outline Mechanical Dimensions

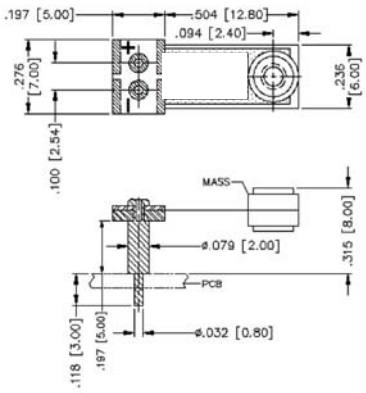

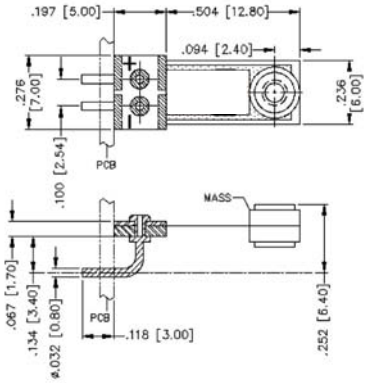

Description	Part Number
LDTC MiniSense 100 (Horizontal)	1005939-1
LDTC MiniSense 100 (Vertical)	1005940-1
LDTC MiniSense 100 (No mass)	1007158-1
LDTC MiniSense 100 (Reduced Height)	1006015-1

Effective: August 1st, 2008

Please contact the factory for pricing and custom part quotations.
800.745.8008

Contact Microphone
CM-01B

The CM-01B Contact Microphone uses sensitive but robust PVDF piezo film combined with a low-noise electronic preamplifier to provide a unique sound or vibration pick-up with buffered output. The design minimizes external acoustic noise while offering extremely high sensitivity to vibration applied to the central rubber pad. The CM-01B is ideal for detecting body sounds.

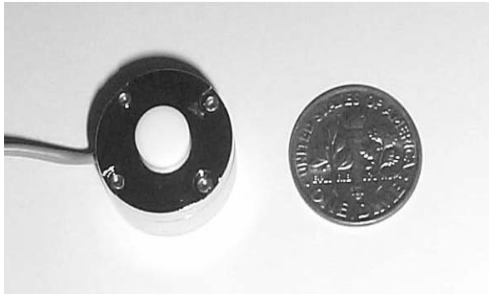

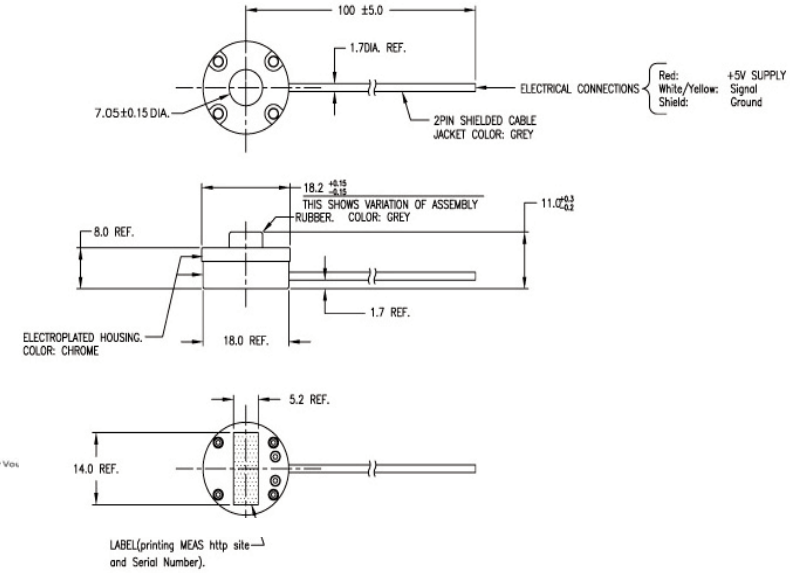

FEATURES

- Broad bandwidth
- High sensitivity
- Excellelent impact resistance
- Light Weight
- Low Cost

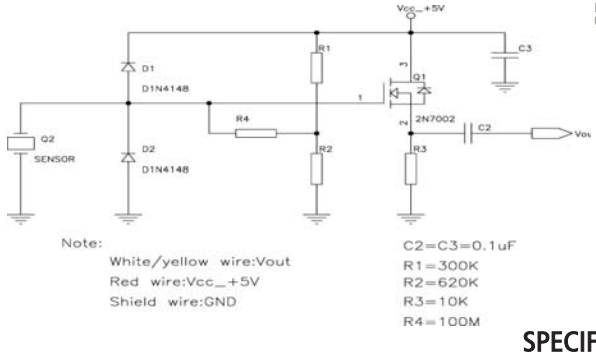

SPECIFICATIONS

Characteristics	Min	Typ	Max	Units
Sensitivity		40		V/mm
Lower Limiting Frequency (-3 dB)		8		Hz
Upper Limiting Frequency (+3 dB)		2200		Hz
Resonance Frequency		5000		Hz
Spring Constant		20		N/m
Electronic Noise		1		mV pk-pk
Supply Voltage	4	5	30	
Supply Current		0.1		mA
Operating Temperature	+5		+60	°C
Storage Temperature	-20		+85	°C

Description	Part Number
Contact Microphone CM-01B	1007079-1

Effective: August 1st, 2008

Please contact the factory for pricing and custom part quotations.
800.745.8008

Kits

A good way to learn more about piezo film sensors is to purchase one of our design kits. These kits illustrate the use of piezo film in different configurations, and are a good starting point to learn more about piezo film sensors and their applications.

Basic Design

This kit demonstrates the use of MEAS piezo film sensors as microphones, speakers, switches and acoustic pickups. All the components and film samples in the kit can be used for experimentation.

Contents of the Basic Design Kit:

- Technical Manual
- Speaker Element
- Piezo Cable
- Flicker
- SW100-01-R
- ACH-04-08-05
- SDT1-028K
- LDT0-028K
- LDT1-028K
- DT1-028K
- Test PCB ACH-04-08
- Application Notes
- Application Specs
- Instructions Sheets

Ultrasound Design Kit

This kit demonstrates the use of the MEAS piezo film for low frequency (40 kHz) ultrasound. Typical applications include two-dimensional positioning, digitizers, object detection, and distance measurement.

Contents of the Ultrasound Design Kit:

- 40 kHz transmitters (4 ea)
- 40 kHz transmitters (4 ea)
- One drive electronic board
- Preamplifier (2 ea)
- Test boards (2 ea)
- Cable assembles
- Product data sheets
- Instruction sheets

Vibration/ Acceleration

This kit demonstrates the capabilities of piezo film as a vibration sensor and accelerometer component. The kit includes shielded and unshielded thin film sensors and an ACH-01 accelerometer component with an interface amplifier.

Contents of the Vibration and Acceleration Kit:

- Technical Manual
- SDT1-028K
- ACH-01 MEAS Box
- ACH01-03/10
- LDT1-028K
- LDT0-028K
- DT1-028K
- 9 Volt Battery
- Application Specs
- Instructions Sheets

Description	Part Number
Basic Design Kit	1004308
Vibration/Acceleration Kit	1003460
Ultrasound Design Kit	1005870

Effective: August 1st, 2008

Please contact the factory for pricing and custom part quotations.
800.745.8008

01800001-000_0808

Компания «ЭлектроПласт» предлагает заключение долгосрочных отношений при поставках импортных электронных компонентов на взаимовыгодных условиях!

Наши преимущества:

- Оперативные поставки широкого спектра электронных компонентов отечественного и импортного производства напрямую от производителей и с крупнейших мировых складов;
- Поставка более 17-ти миллионов наименований электронных компонентов;
- Поставка сложных, дефицитных, либо снятых с производства позиций;
- Оперативные сроки поставки под заказ (от 5 рабочих дней);
- Экспресс доставка в любую точку России;
- Техническая поддержка проекта, помощь в подборе аналогов, поставка прототипов;
- Система менеджмента качества сертифицирована по Международному стандарту ISO 9001;
- Лицензия ФСБ на осуществление работ с использованием сведений, составляющих государственную тайну;
- Поставка специализированных компонентов (Xilinx, Altera, Analog Devices, Intersil, Interpoint, Microsemi, Aeroflex, Peregrine, Syfer, Eurofarad, Texas Instrument, Miteq, Cobham, E2V, MA-COM, Hittite, Mini-Circuits,General Dynamics и др.);

Помимо этого, одним из направлений компании «ЭлектроПласт» является направление «Источники питания». Мы предлагаем Вам помощь Конструкторского отдела:

- Подбор оптимального решения, техническое обоснование при выборе компонента;
- Подбор аналогов;
- Консультации по применению компонента;
- Поставка образцов и прототипов;
- Техническая поддержка проекта;
- Защита от снятия компонента с производства.

Как с нами связаться

Телефон: 8 (812) 309 58 32 (многоканальный)
Факс: 8 (812) 320-02-42
Электронная почта: org@eplast1.ru
Адрес: 198099, г. Санкт-Петербург, ул. Калинина, дом 2, корпус 4, литера А.