THIS DRAWING IS UNPUBLISHED. RELEASED FOR PUBLICATION 20
© COPYRIGHT 20 BY - ALL RIGHTS RESERVED.

REVISIONS

P	LTR	DESCRIPTION	DATE	DWN	APVD
	D	REVISED PER ECO-15-017922	01APR2016	AP	RP

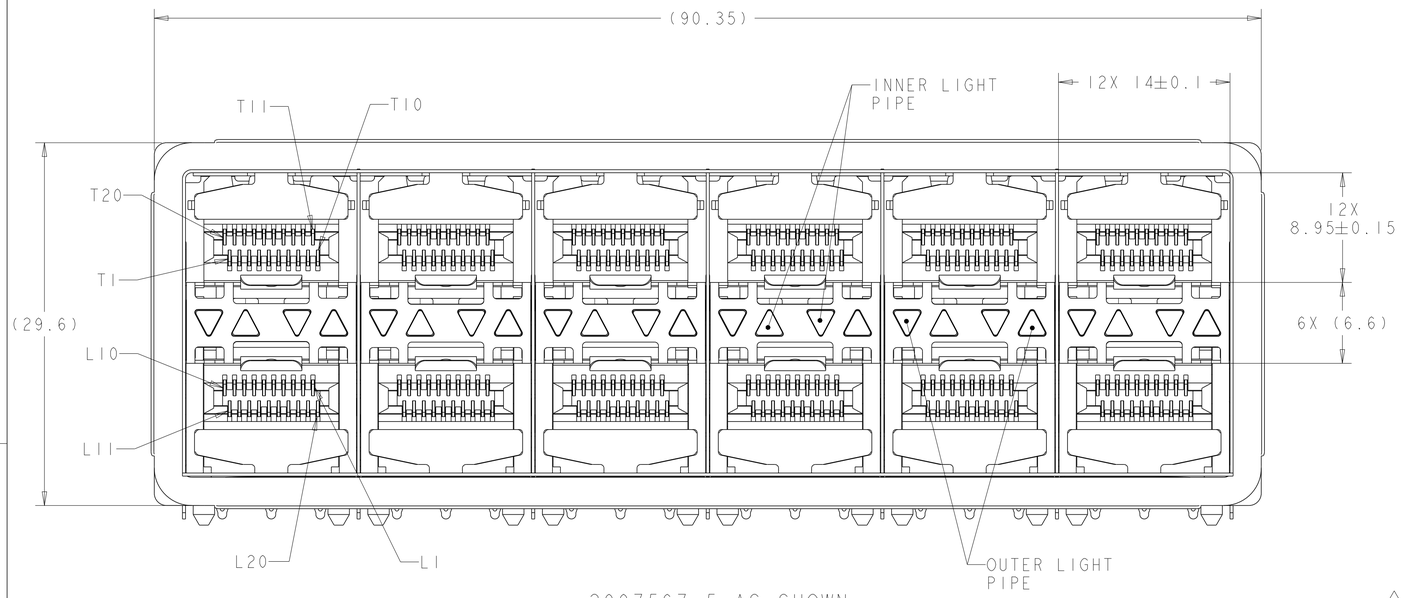

2007567-5 AS SHOWN

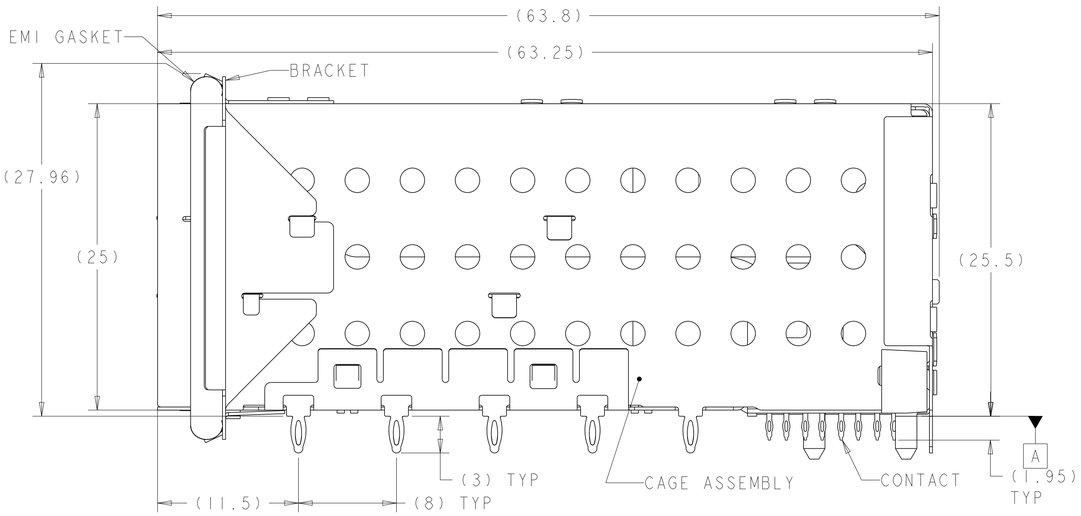

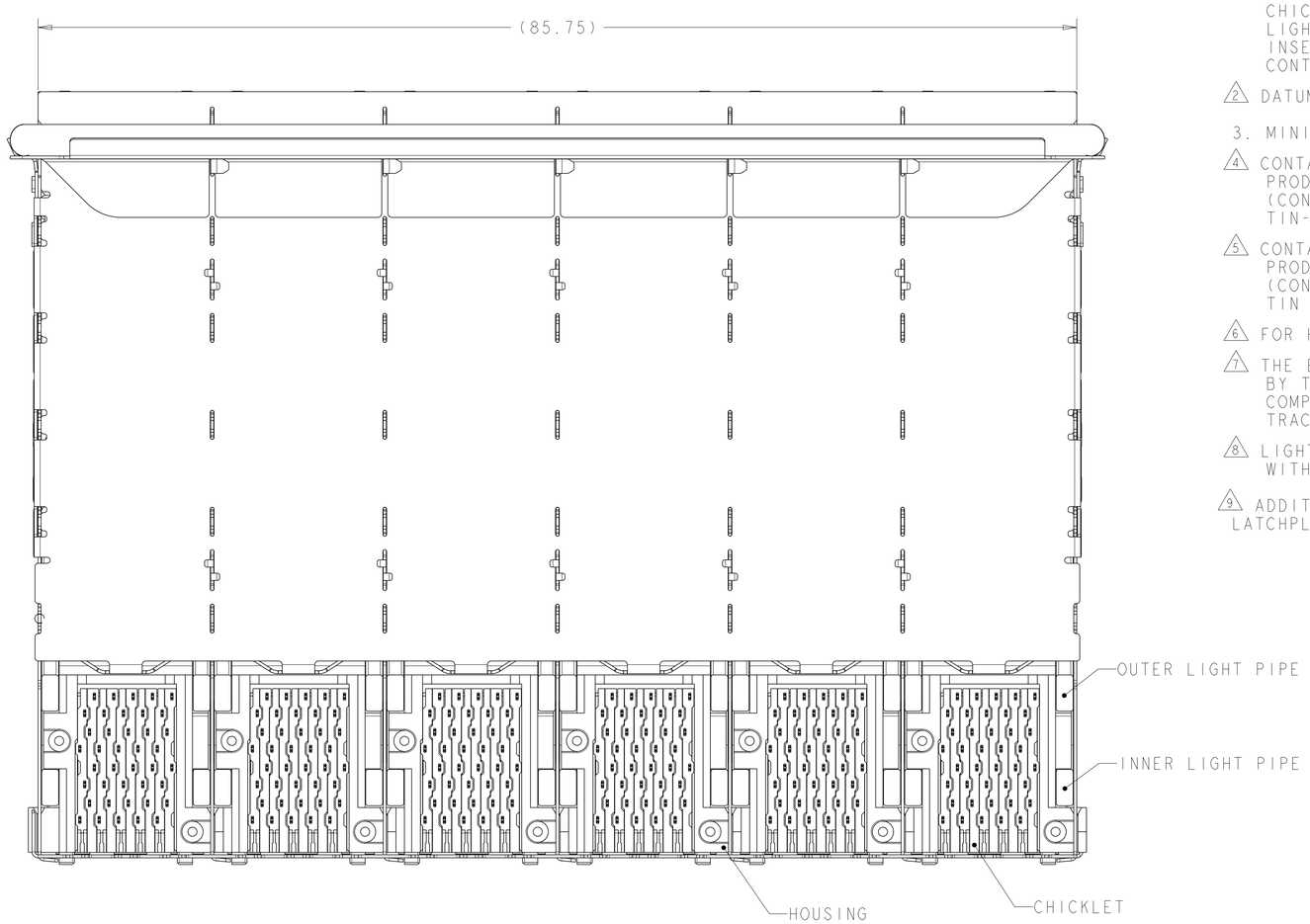

1. MATERIALS:
   CAGE ASSEMBLY- NICKEL SILVER ALLOY PER ASTM B 122.
   BRACKET- STAINLESS STEEL.
   EMI GASKET- PLATED FILLED SILICONE.
   HOUSING- BLACK LCP, UL 94V-O RATED.
   CHICKLET- BLACK LCP, UL 94V-O RATED.
   LIGHT PIPE- POLYCARBONATE, CLEAR.
   INSERT - (FOR LIGHT PIPE PART NUMBERS ONLY) - LCP, BLACK, UL 94V-0.
   CONTACT- COPPER ALLOY.

2. DATUM AND BASIC DIMENSIONS ESTABLISHED BY CUSTOMER.

3. MINIMUM PCB THICKNESS OF 1.5.

4. CONTACT FINISH- CONFORMS TO THE REQUIREMENTS OF TYCO ELECTRONICS PRODUCT SPECIFICATION 108-2331, BASED ON EIA/ECA-364-1000.01A, (CONTROLLED ENVIRONMENT APPLICATIONS) ON MATING INTERFACE, TIN-LEAD ON NEEDLE EYE.

5. CONTACT FINISH- CONFORMS TO THE REQUIREMENTS OF TYCO ELECTRONICS PRODUCT SPECIFICATION 108-2331, BASED ON EIA/ECA-364-1000.01A, (CONTROLLED ENVIRONMENT APPLICATIONS) ON MATING INTERFACE, TIN ON NEEDLE EYE.

6. FOR HOLE SIZE AND PLATINGS, SEE APPLICATION SPEC 114-13219.

7. THE ENTIRE AREA OF THE CONNECTOR FOOTPRINT, INDICATED BY THE DASHED LINE, TO BE CONSIDERED THE KEEPOUT AREA FOR COMPONENTS AND SIGNAL TRACES, TOP SIDE ONLY. TOP SIDE TRACES ALLOWED WITHIN CONNECTOR HOLE PATTERN.

8. LIGHT PIPE PAD LAYOUT IS FOR 0805 LOW PROFILE LED PACKAGE WITH A HEIGHT OF 0.8mm.

9. ADDITIONAL COMPONENT LOCATED WITHIN LATCHPLATE FOR EMI SUPPRESSION

	ENHANCED EMI	FINISH	DESCRIPTION	PART NUMBER
	YES 9	5	NO LIGHT PIPES	1-2007567-8
			OUTER 2 LIGHT PIPES	1-2007567-7
			INNER 2 LIGHT PIPES	1-2007567-6
			4 LIGHT PIPES	1-2007567-5
	NO	5	NO LIGHT PIPES	2007567-8
			OUTER 2 LIGHT PIPES	2007567-7
			INNER 2 LIGHT PIPES	2007567-6
			4 LIGHT PIPES	2007567-5
SUPERSEDED	NO	4	NO LIGHT PIPES	2007567-4
			OUTER 2 LIGHT PIPES	2007567-3
			INNER 2 LIGHT PIPES	2007567-2
			4 LIGHT PIPES	2007567-1

THIS DRAWING IS A CONTROLLED DOCUMENT.

DIMENSIONS: mm

TOLERANCES UNLESS OTHERWISE SPECIFIED:
0 PLC ±0.10
1 PLC ±0.10
2 PLC ±0.10
3 PLC ±0.10
4 PLC ±-
ANGLES ±-

MATERIAL 1
FINISH 4 5

DWN M.SHIRK 18JAN2008
CHK D.SZCZESNY 18JAN2008
APVD D.SZCZESNY 18JAN2008
PRODUCT SPEC 108-2331
APPLICATION SPEC 114-13219
WEIGHT -

TE Connectivity

NAME CAGE AND PT CONNECTOR ASSEMBLY, WITH EMI GASKET, PRESS FIT, 2X6, STACKED SFP+

SIZE	CAGE CODE	DRAWING NO	RESTRICTED TO
A1	00779	C-2007567	-

CUSTOMER DRAWING SCALE 4:1 SHEET 1 OF 4 REV D

THIS DRAWING IS UNPUBLISHED. RELEASED FOR PUBLICATION 20
© COPYRIGHT 20 BY - ALL RIGHTS RESERVED.

REVISIONS

P	LTR	DESCRIPTION	DATE	DWN	APVD
	-	SEE SHEET 1	-	-	-

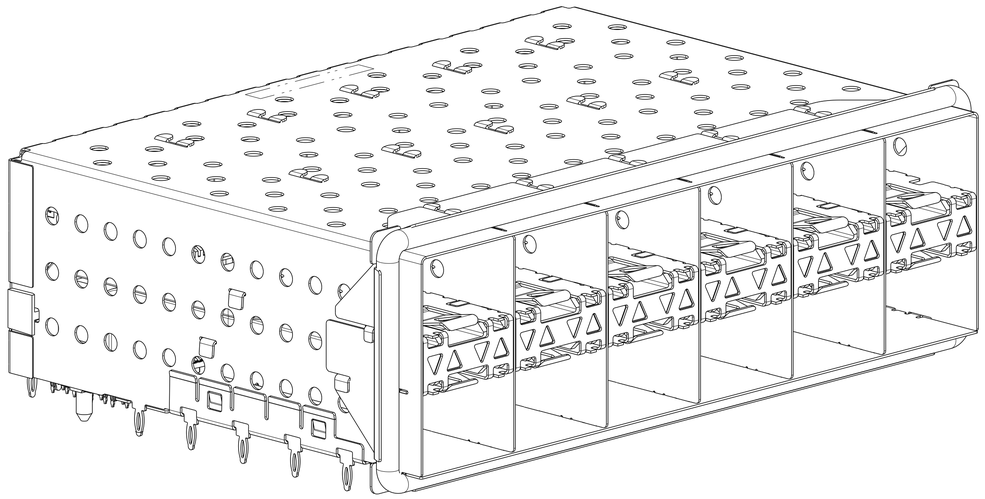

2007567-5 AND 1-2007567-5
SCALE 3:1

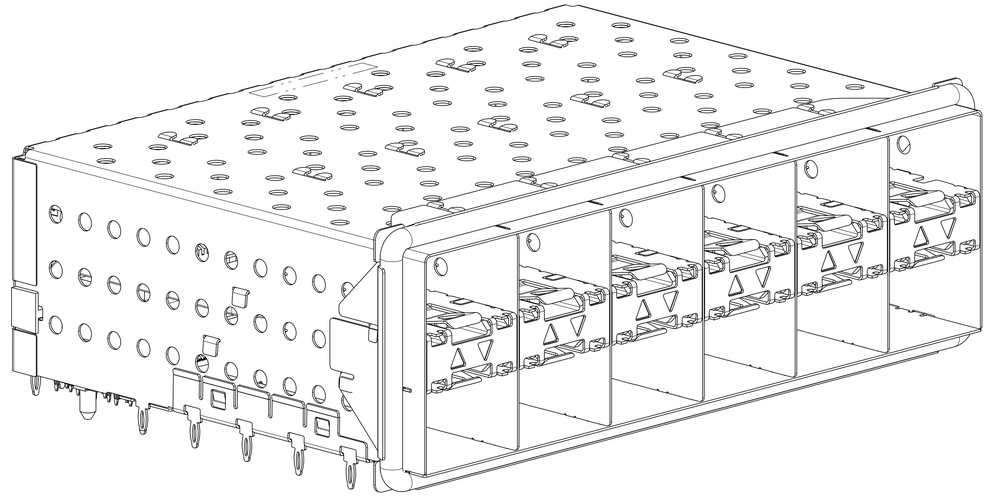

2007567-6 AND 1-2007567-6
SCALE 3:1

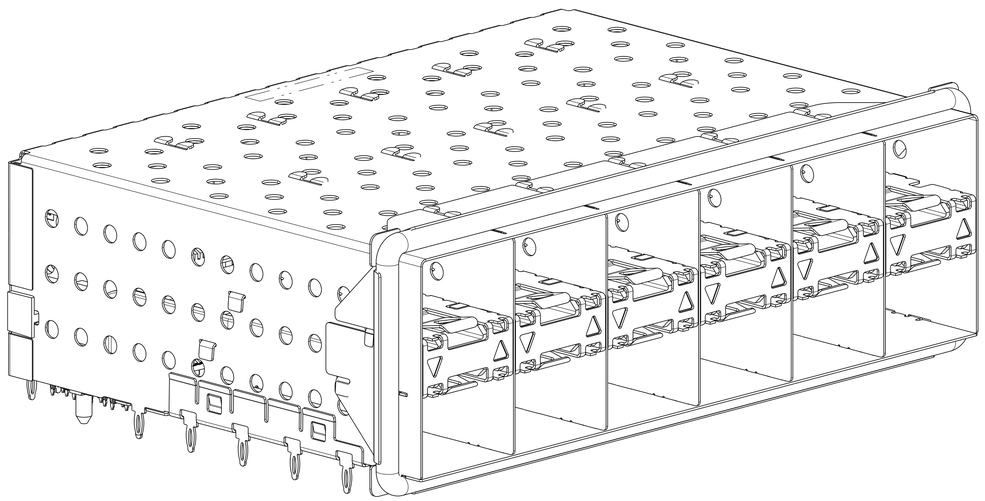

2007567-7 AND 1-2007567-7
SCALE 3:1

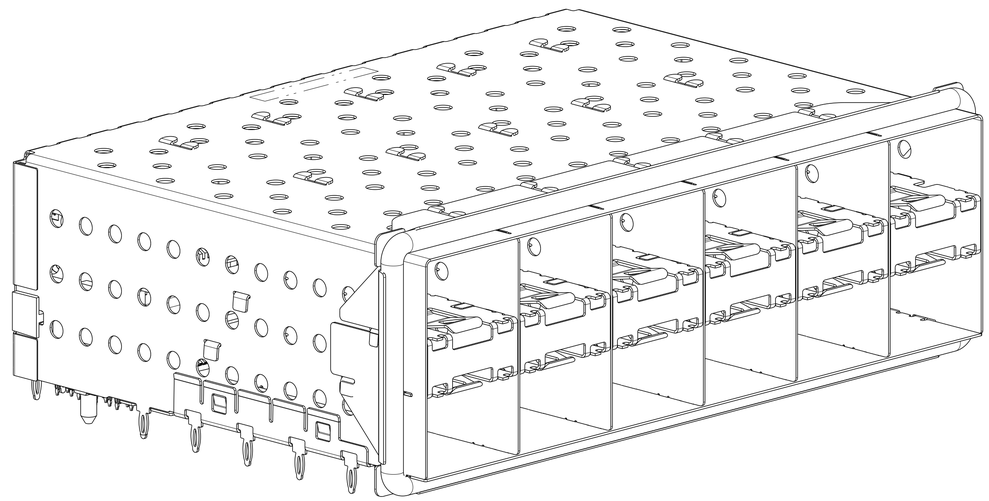

2007567-8 AND 1-2007567-8
SCALE 3:1

THIS DRAWING IS A CONTROLLED DOCUMENT.

DIMENSIONS: mm

TOLERANCES UNLESS OTHERWISE SPECIFIED:
0 PLC ±0.10
1 PLC ±0.10
2 PLC ±0.10
3 PLC ±0.10
4 PLC ±
ANGLES ±-

MATERIAL
FINISH

DWN M.SHIRK 18JAN2008
CHK D.SZCZESNY 18JAN2008
APVD D.SZCZESNY 18JAN2008
PRODUCT SPEC 108-2331
APPLICATION SPEC 114-13219
WEIGHT -

TE Connectivity

NAME CAGE AND PT CONNECTOR ASSEMBLY, WITH EMI GASKET, PRESS FIT, 2X6, STACKED SFP+

SIZE	CAGE CODE	DRAWING NO	RESTRICTED TO
A1	00779	C-2007567	-

CUSTOMER DRAWING SCALE 4:1 SHEET 2 OF 4 REV D

4805 (3/13)

THIS DRAWING IS UNPUBLISHED. RELEASED FOR PUBLICATION 20
© COPYRIGHT 20 BY - ALL RIGHTS RESERVED.

REVISIONS

P	LTR	DESCRIPTION	DATE	DWN	APVD
	-	SEE SHEET 1	-	-	-

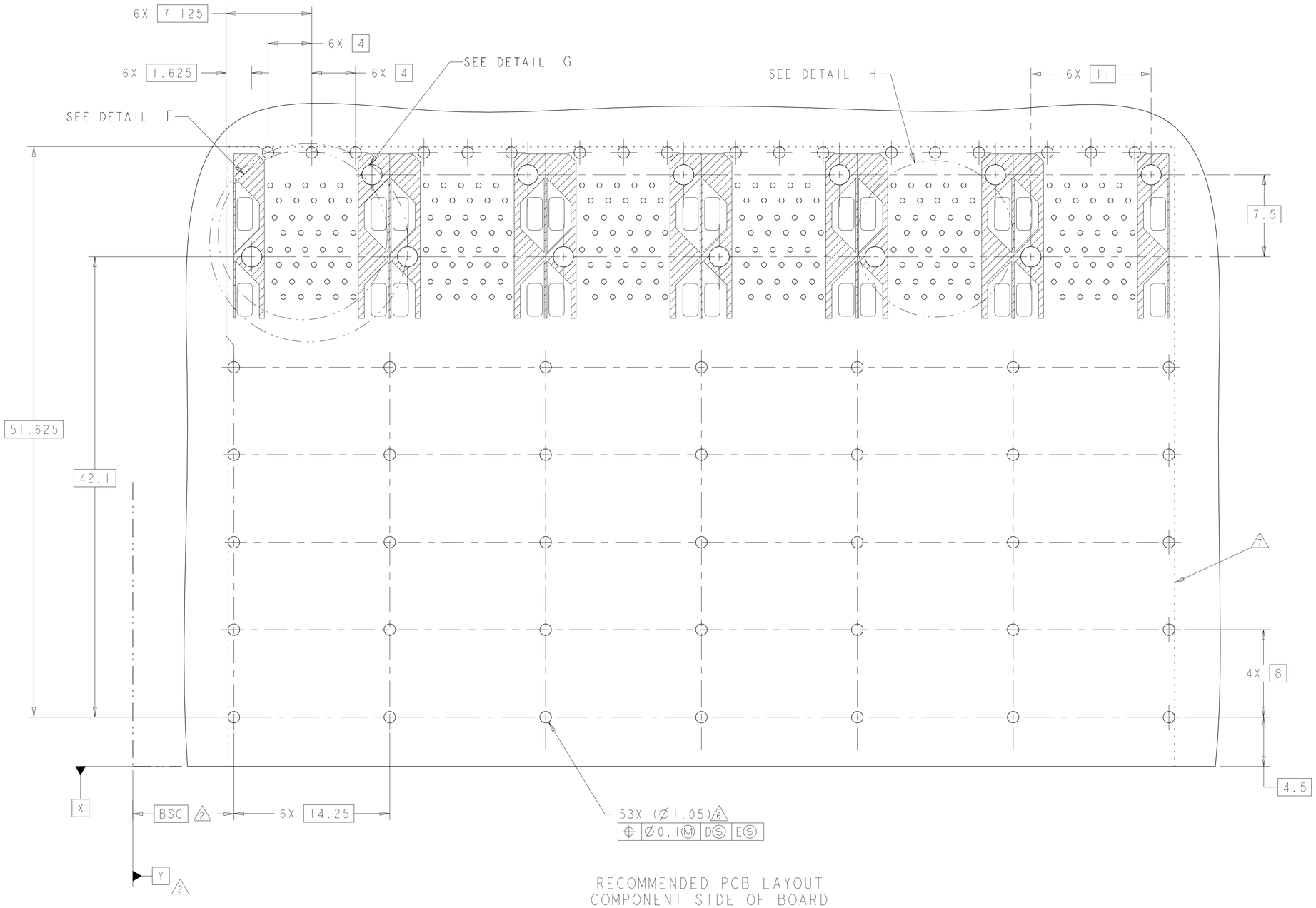

RECOMMENDED PCB LAYOUT
COMPONENT SIDE OF BOARD
SCALE 5:1

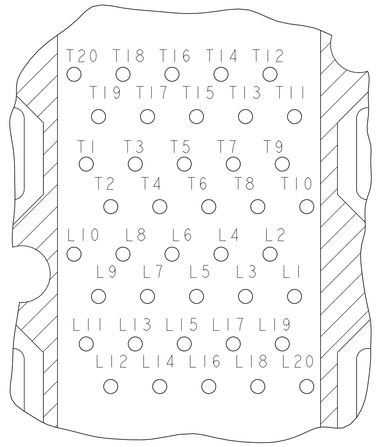

DETAIL H
CONNECTOR PIN-OUT
COMPONENT SIDE OF BOARD
6X INDIVIDUALLY
SCALE 10:1

THIS DRAWING IS A CONTROLLED DOCUMENT.

DIMENSIONS: mm

TOLERANCES UNLESS OTHERWISE SPECIFIED:
0 PLC ±0.10
1 PLC ±0.10
2 PLC ±0.10
3 PLC ±0.10
4 PLC ±-
ANGLES ±-

MATERIAL
FINISH

DWN M.SHIRK 18JAN2008
CHK D.SZCZESNY 18JAN2008
APVD D.SZCZESNY 18JAN2008
PRODUCT SPEC 108-2331
APPLICATION SPEC 114-13219
WEIGHT -

TE Connectivity

NAME CAGE AND PT CONNECTOR ASSEMBLY, WITH EMI GASKET, PRESS FIT, 2X6, STACKED SFP+

SIZE A1 | CAGE CODE 00779 | DRAWING NO C-2007567 | RESTRICTED TO -

CUSTOMER DRAWING | SCALE 4:1 | SHEET 3 OF 4 | REV D

4805 (3/13)

THIS DRAWING IS UNPUBLISHED. RELEASED FOR PUBLICATION 20
© COPYRIGHT 20 BY - ALL RIGHTS RESERVED.

REVISIONS

P	LTR	DESCRIPTION	DATE	DWN	APVD
	-	SEE SHEET 1	-	-	-

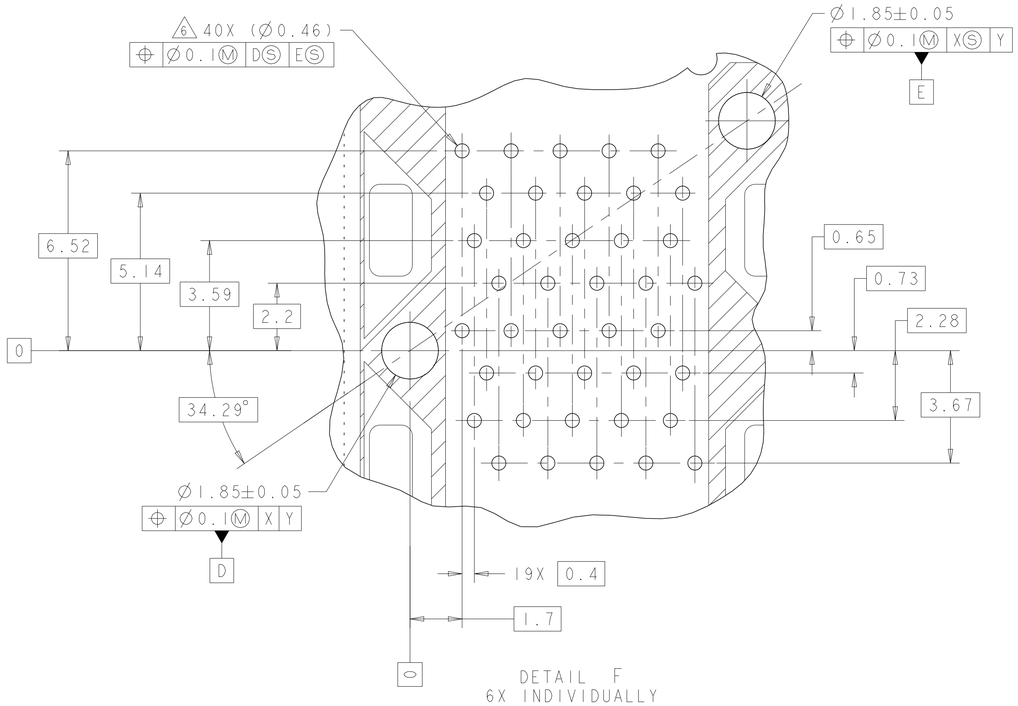

DETAIL F
6X INDIVIDUALLY
SCALE 10:1

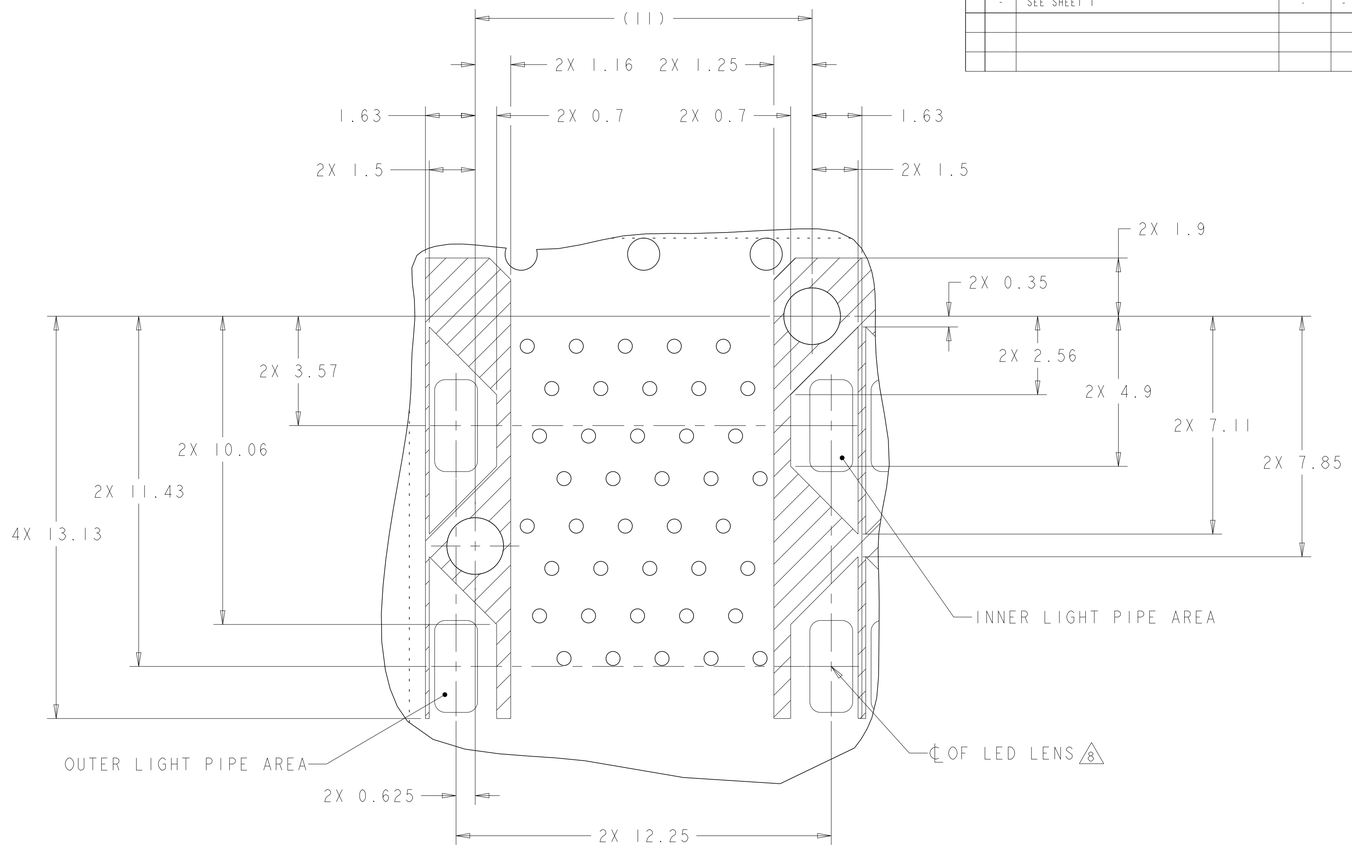

DETAIL G
CONNECTOR HOUSING
KEEPOUT ZONE
6X INDIVIDUALLY
SCALE 10:1

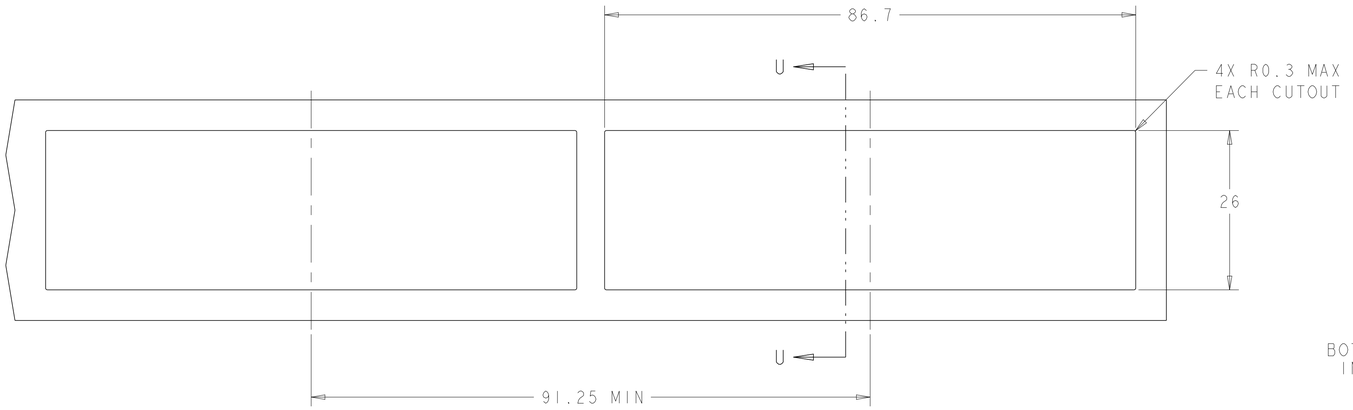

RECOMMENDED PANEL CUTOUT
AND PC BOARD, PANEL POSITION
SCALE 2:1

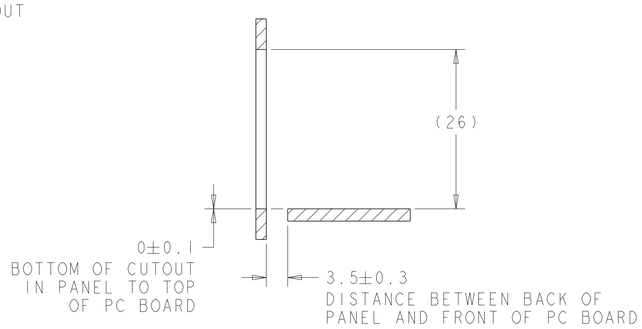

SECTION U-U

THIS DRAWING IS A CONTROLLED DOCUMENT.

DIMENSIONS: mm

TOLERANCES UNLESS OTHERWISE SPECIFIED:
0 PLC ±0.10
1 PLC ±0.10
2 PLC ±0.10
3 PLC ±0.10
4 PLC ±-
ANGLES ±-

MATERIAL
FINISH

DWN M.SHIRK 18JAN2008
CHK D.SZCZESNY 18JAN2008
APVD D.SZCZESNY 18JAN2008
PRODUCT SPEC 108-2331
APPLICATION SPEC 114-13219
WEIGHT -

TE Connectivity

NAME CAGE AND PT CONNECTOR ASSEMBLY, WITH EMI GASKET, PRESS FIT, 2X6, STACKED SFP+

SIZE	CAGE CODE	DRAWING NO	RESTRICTED TO
A1	00779	C-2007567	-

CUSTOMER DRAWING | SCALE 4:1 | SHEET 4 OF 4 | REV D

4805 (3/13)

Компания «ЭлектроПласт» предлагает заключение долгосрочных отношений при поставках импортных электронных компонентов на взаимовыгодных условиях!

Наши преимущества:

- Оперативные поставки широкого спектра электронных компонентов отечественного и импортного производства напрямую от производителей и с крупнейших мировых складов;
- Поставка более 17-ти миллионов наименований электронных компонентов;
- Поставка сложных, дефицитных, либо снятых с производства позиций;
- Оперативные сроки поставки под заказ (от 5 рабочих дней);
- Экспресс доставка в любую точку России;
- Техническая поддержка проекта, помощь в подборе аналогов, поставка прототипов;
- Система менеджмента качества сертифицирована по Международному стандарту ISO 9001;
- Лицензия ФСБ на осуществление работ с использованием сведений, составляющих государственную тайну;
- Поставка специализированных компонентов (Xilinx, Altera, Analog Devices, Intersil, Interpoint, Microsemi, Aeroflex, Peregrine, Syfer, Eurofarad, Texas Instrument, Miteq, Cobham, E2V, MA-COM, Hittite, Mini-Circuits,General Dynamics и др.);

Помимо этого, одним из направлений компании «ЭлектроПласт» является направление «Источники питания». Мы предлагаем Вам помощь Конструкторского отдела:

- Подбор оптимального решения, техническое обоснование при выборе компонента;
- Подбор аналогов;
- Консультации по применению компонента;
- Поставка образцов и прототипов;
- Техническая поддержка проекта;
- Защита от снятия компонента с производства.

Как с нами связаться

Телефон: 8 (812) 309 58 32 (многоканальный)
Факс: 8 (812) 320-02-42
Электронная почта: org@eplast1.ru
Адрес: 198099, г. Санкт-Петербург, ул. Калинина, дом 2, корпус 4, литера А.