55000 series

VDE approved miniature toggle switches • threaded or plain bushing

DISTINCTIVE FEATURES

VDE marked as standard
UL and CSA approvals also available
Single and double pole configurations

ELECTRICAL SPECIFICATIONS

- Class I (normal insulation)
- Small contact opening : µ (< 3 mm (.118))
- Current/voltage rating with resistive load : 3 A 250 VAC - 6 A 125 VAC
- Dielectric strength :
  2,000 Vrms 50 Hz min. between poles and between terminals and frame
  1,000 Vrms 50 Hz min. between terminals
- Special case for increased creepage distance and air gap : 3 mm (.118)

GENERAL SPECIFICATIONS

- Insulating cap, compulsory, supplied glued on the lever :
  U270 for models 55600A, 55200A and 55200ZA
  U1040 for models 55200WA and 55200WA X433
- Ground connector : U721 compulsory if the panel is not metallic or not connected to ground
- Epoxy sealed terminals standard

MATERIALS

- Contacts : silver
- Case : diallylphthalate (DAP)
- Actuator : brass, chrome plated with insulating vinyl cap
- Bushing : brass, nickel plated
- Housing : stainless steel
- Terminal seal : epoxy

FURTHER SPECIFICATIONS : see 5000 series.

The company reserves the right to change specifications without notice.

55000 series

VDE approved miniature toggle switches • threaded or plain bushing

AGENCY APPROVALS

EN 61058-1

Complete appropriate box of ordering format.

ELECTRICAL FUNCTIONS

→ KEYWAY

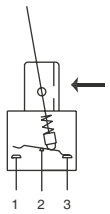

PANEL CUT-OUT

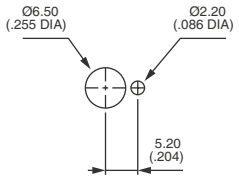

Bushing Ø 6.35 (1/4)

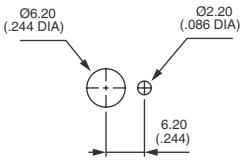

Bushing Ø 6 (.236)

55000 series

VDE approved miniature toggle switches • threaded or plain bushing

BUILD YOUR PART NUMBER

BASIC PART NUMBER

55

SERIES

TERMINALS AND BUSHING

6	Solder lug terminals with dia. 6.35 (1/4) threaded bushing
5	Solder lug terminals with dia. 6 (.236) threaded bushing
2	Straight PC, right angle or quick-connect terminals, threaded or plain bushing

NUMBER OF POLES

3	Single pole
4	Double pole

TERMINALS

Blank	Solder lugs
W	Right angle, horizontal mounting, plain bushing
Z	Quick-connect

ELECTRICAL FUNCTIONS

6	ON	-	ON
9	ON	OFF	ON

CONTACT MATERIALS

A	Silver

OPTIONS

LEVERS

Blank (std)	Standard - insulating cap compulsory
-33	Black cylindrical plastic cap
-4N	For use with paddles only

SPECIAL MODEL

X433	For double pole right angle models only

AGENCY APPROVALS

VDE

VDEUL

VDECSA

Availability : all models.

INSULATING CAPS

Caps	Length
U270	11.00 (.433)
U1040	13.50 (.531)

INSULATING PADDLES FOR 4N (ORDER SEPARATELY)

U240N	12.60 (.496)
U290N	20.00 (.787)
U390N	21.40 (.842)

ABOUT THIS SERIES

On the following pages, you will find successively basic part numbers of switches and options in the same order as in above chart.

Notice: please note that not all combinations of above numbers are available. Refer to the following pages for further information.

Mounting accessories : standard hardware supplied with all threaded bushing models : 2 hex nuts 8 mm (.314) across flats, 1 locking ring and 1 lockwasher. Standard and special hardware is presented in the “Hardware“ section of website.

55000 series

VDE approved miniature toggle switches • threaded or plain bushing

THREADED BUSHING SOLDER LUG TERMINALS

Single pole	Double pole	III 2-3 5-6	II	I 1-2 4-5
55636A	55646A	ON	-	ON
55639A	55649A	ON	OFF	ON

Also available with Ø 6 mm (.236) bushing : **55500**.

→ KEYWAY

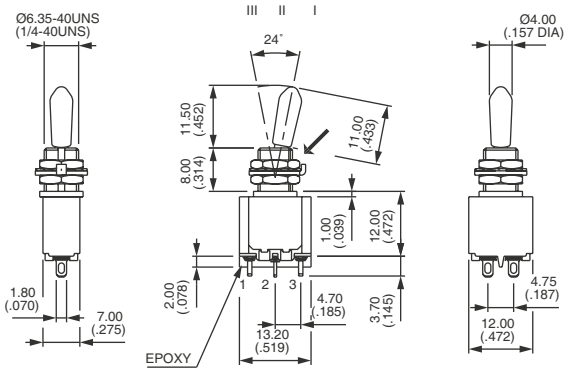

THREADED BUSHING STRAIGHT PC TERMINALS

Single pole	Double pole	III 2-3 5-6	II	I 1-2 4-5
55236A	55246A	ON	-	ON
55239A	55249A	ON	OFF	ON

Also available with Ø 6 mm (.236) bushing : **55100**.

→ KEYWAY

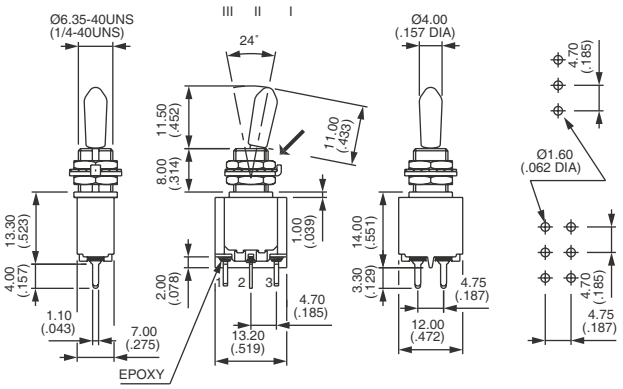

PLAIN BUSHING RIGHT ANGLE TERMINALS - HORIZONTAL

Single pole	Double pole*	III 2-3 5-6	II	I 1-2 4-5
55236WA	55246WA X433	ON	-	ON
55239WA	55249WA X433	ON	OFF	ON

* In double pole W models, spacing between poles on PCB is different from standard : 4,7 mm (.185) instead of 3,81 mm (.150)
Also available for VERTICAL mounting (on request).

→ KEYWAY

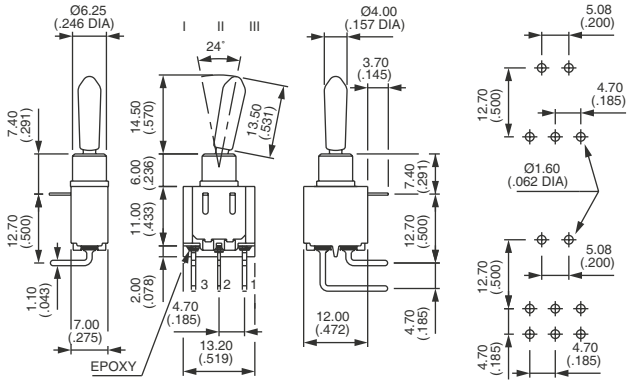

THREADED BUSHING QUICK-CONNECT TERMINALS

Single pole	III 2-3 5-6	II	I 1-2 4-5
55236ZA	ON	-	ON
55239ZA	ON	OFF	ON

→ KEYWAY

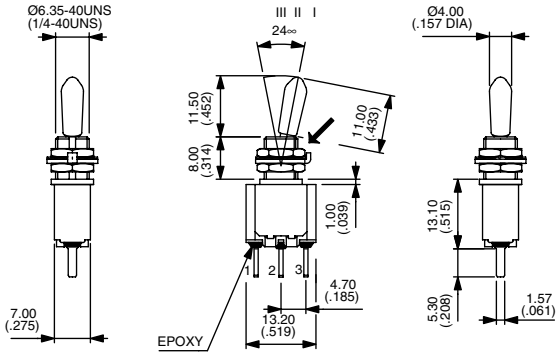

55000 series

VDE approved miniature toggle switches • threaded or plain bushing

LEVERS

BASIC P/N

Blank For threaded bushing models - Cap U270 compulsory
Blank For plain bushing models - Cap U1040 compulsory
-4N For use with paddles only
-33 Black cylindrical plastic cap - For threaded bushing models
-33 Black cylindrical plastic cap - For plain bushing models

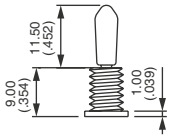

Blank

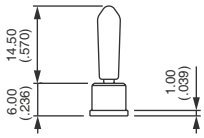

Blank

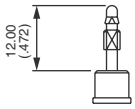

-4N

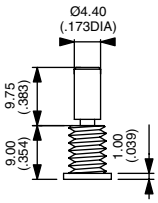

-33

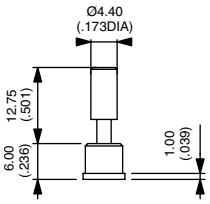

-33

SPECIAL MODEL

BASIC P/N

X433 For double pole right angle models only.

AGENCY APPROVALS

BASIC P/N

VDE
VDEUL
VDEULCSA

Complete above box with desired approvals.

INSULATING CAPS

BASIC P/N + U...

Compulsory - delivered assembled on the lever
U270 For threaded bushing models
U1040 For plain bushing models

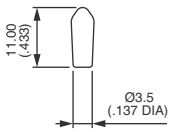

U270

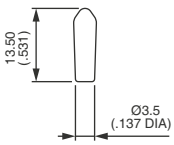

U1040

For cap colors, replace "**0**" with number :

1	Blue
1/4	Dark blue
2	Black
3	Green
4	Grey
5	Yellow
7/1	White
9	Orange

55000 series

VDE approved miniature toggle switches • threaded or plain bushing

PADDLES

For use with lever 4N only. Shown with standard threaded bushing. **Order separately.**

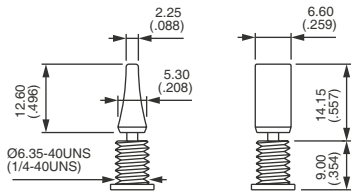

U240N

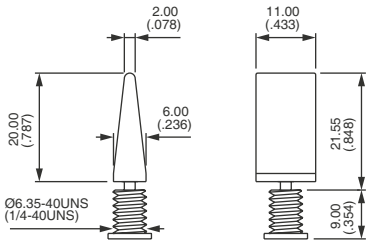

U290N

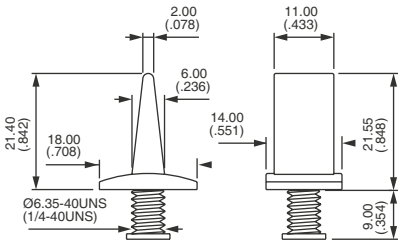

U390N

For cap colors, replace «**0**» with number :

1	Blue
1/4	Dark blue
2	Black
3	Green
4	Grey
5	Yellow
6	Red
7	Ivory
7/1	White
9	Orange

GROUND CONNECTOR

IMPORTANT : compulsory on models with threaded bushing if the panel is not metallic or not connected to ground.
Order separately.

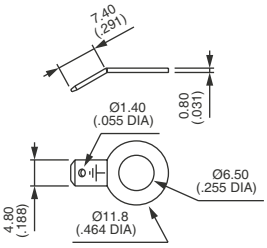

U721

Компания «ЭлектроПласт» предлагает заключение долгосрочных отношений при поставках импортных электронных компонентов на взаимовыгодных условиях!

Наши преимущества:

- Оперативные поставки широкого спектра электронных компонентов отечественного и импортного производства напрямую от производителей и с крупнейших мировых складов;
- Поставка более 17-ти миллионов наименований электронных компонентов;
- Поставка сложных, дефицитных, либо снятых с производства позиций;
- Оперативные сроки поставки под заказ (от 5 рабочих дней);
- Экспресс доставка в любую точку России;
- Техническая поддержка проекта, помощь в подборе аналогов, поставка прототипов;
- Система менеджмента качества сертифицирована по Международному стандарту ISO 9001;
- Лицензия ФСБ на осуществление работ с использованием сведений, составляющих государственную тайну;
- Поставка специализированных компонентов (Xilinx, Altera, Analog Devices, Intersil, Interpoint, Microsemi, Aeroflex, Peregrine, Syfer, Eurofarad, Texas Instrument, Miteq, Cobham, E2V, MA-COM, Hittite, Mini-Circuits,General Dynamics и др.);

Помимо этого, одним из направлений компании «ЭлектроПласт» является направление «Источники питания». Мы предлагаем Вам помощь Конструкторского отдела:

- Подбор оптимального решения, техническое обоснование при выборе компонента;
- Подбор аналогов;
- Консультации по применению компонента;
- Поставка образцов и прототипов;
- Техническая поддержка проекта;
- Защита от снятия компонента с производства.

Как с нами связаться

Телефон: 8 (812) 309 58 32 (многоканальный)
Факс: 8 (812) 320-02-42
Электронная почта: org@eplast1.ru
Адрес: 198099, г. Санкт-Петербург, ул. Калинина, дом 2, корпус 4, литера А.