**Important notice**

Dear Customer,

On 7 February 2017 the former NXP Standard Product business became a new company with the tradename **Nexperia**. Nexperia is an industry leading supplier of Discrete, Logic and PowerMOS semiconductors with its focus on the automotive, industrial, computing, consumer and wearable application markets

In data sheets and application notes which still contain NXP or Philips Semiconductors references, use the references to Nexperia, as shown below.

Instead of http://www.nxp.com, http://www.philips.com/ or http://www.semiconductors.philips.com/, use **http://www.nexperia.com**

Instead of sales.addresses@www.nxp.com or sales.addresses@www.semiconductors.philips.com, use **salesaddresses@nexperia.com** (email)

Replace the copyright notice at the bottom of each page or elsewhere in the document, depending on the version, as shown below:
- © NXP N.V. (year). All rights reserved or © Koninklijke Philips Electronics N.V. (year). All rights reserved
Should be replaced with:
- **© Nexperia B.V. (year). All rights reserved**.

If you have any questions related to the data sheet, please contact our nearest sales office via e-mail or telephone (details via **salesaddresses@nexperia.com**). Thank you for your cooperation and understanding,

Kind regards,

Team Nexperia

# DATA SHEET

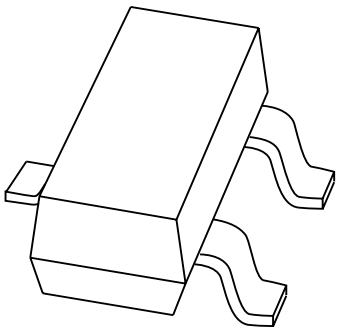

# PBSS5120T

20 V, 1 A

PNP low $V_{CEsat}$ (BISS) transistor

Product data sheet

2003 Sep 29

founded by Philips

# 20 V, 1 A PNP low $V_{CEsat}$ (BISS) transistor

# PBSS5120T

## FEATURES

- Low collector-emitter saturation voltage $V_{CEsat}$
- High collector current capability $I_C$ and $I_{CM}$
- High efficiency leading to less heat generation
- Reduced printed-circuit board requirements
- Cost effective alternative for MOSFETs in specific applications.

## APPLICATIONS

- Power management
  - DC/DC conversion
  - Supply line switching
  - Battery charger
  - LCD backlighting.
- Peripheral drivers
  - Driver in low supply voltage applications (e.g. lamps and LEDs)
  - Inductive load drivers (e.g. relays, buzzers and motors).

## DESCRIPTION

PNP BISS transistor in a SOT23 plastic package providing ultra low $V_{CEsat}$ and $R_{CEsat}$ parameters.
NPN complement: PBSS4120T.

## MARKING

| TYPE NUMBER | MARKING CODE(1) |
|---|---|
| PBSS5120T | *3K |

**Note**

1. * = p: made in Hong Kong.
   * = t: made in Malaysia.
   * = W: made in China.

## QUICK REFERENCE DATA

| SYMBOL | PARAMETER | MAX. | UNIT |
|---|---|---|---|
| $V_{CEO}$ | collector-emitter voltage | –20 | V |
| $I_C$ | collector current (DC) | –1 | A |
| $I_{CM}$ | peak collector current | –2 | A |
| $R_{CEsat}$ | equivalent on-resistance | 250 | mΩ |

## PINNING

| PIN | DESCRIPTION |
|---|---|
| 1 | base |
| 2 | emitter |
| 3 | collector |

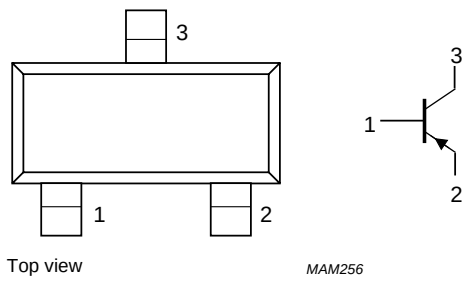


Fig.1 Simplified outline (SOT23) and symbol.

## ORDERING INFORMATION

| TYPE NUMBER | PACKAGE | | |
|---|---|---|---|
| | NAME | DESCRIPTION | VERSION |
| PBSS5120T | – | plastic surface mounted package; 3 leads | SOT23 |

## LIMITING VALUES

In accordance with the Absolute Maximum Rating System (IEC 60134).

| SYMBOL | PARAMETER | CONDITIONS | MIN. | MAX. | UNIT |
|---|---|---|---|---|---|
| $V_{CBO}$ | collector-base voltage | open emitter | – | −20 | V |
| $V_{CEO}$ | collector-emitter voltage | open base | – | −20 | V |
| $V_{EBO}$ | emitter-base voltage | open collector | – | −5 | V |
| $I_C$ | collector current (DC) | | – | −1 | A |
| $I_{CM}$ | peak collector current | | – | −2 | A |
| $I_{BM}$ | peak base current | | – | −200 | mA |
| $P_{tot}$ | total power dissipation | $T_{amb} \leq 25$ °C; note 1 | – | 300 | mW |
| | | $T_{amb} \leq 25$ °C; note 2 | – | 480 | mW |
| $T_{stg}$ | storage temperature | | −65 | +150 | °C |
| $T_j$ | junction temperature | | – | 150 | °C |
| $T_{amb}$ | operating ambient temperature | | −65 | +150 | °C |

**Notes**

1. Device mounted on a FR4 printed-circuit board, single-sided copper, tinplated, standard footprint.
2. Device mounted on a FR4 printed-circuit board, single-sided copper, tinplated, mounting pad for collector 1 $cm^2$.

## THERMAL CHARACTERISTICS

| SYMBOL | PARAMETER | CONDITIONS | VALUE | UNIT |
|---|---|---|---|---|
| $R_{th\ j\text{-}a}$ | thermal resistance from junction to ambient | in free air; note 1 | 417 | K/W |
| | | in free air; note 2 | 260 | K/W |

**Notes**

1. Device mounted on a FR4 printed-circuit board, single-sided copper, tinplated, standard footprint.
2. Device mounted on a FR4 printed-circuit board, single-sided copper, tinplated, mounting pad for collector 1 $cm^2$.

**CHARACTERISTICS**

$T_{amb}$ = 25 °C unless otherwise specified.

| SYMBOL | PARAMETER | CONDITIONS | MIN. | TYP. | MAX. | UNIT |
|---|---|---|---|---|---|---|
| $I_{CBO}$ | collector-base cut-off current | $V_{CB}$ = –20 V; $I_E$ = 0 | – | – | –100 | nA |
| | | $V_{CB}$ = –20 V; $I_E$ = 0; $T_j$ = 150 °C | – | – | –50 | μA |
| $I_{EBO}$ | emitter-base cut-off current | $V_{EB}$ = –4 V; $I_C$ = 0 | – | – | –100 | nA |
| $h_{FE}$ | DC current gain | $V_{CE}$ = –2 V; $I_C$ = –100 mA | 300 | 450 | – | |
| | | $V_{CE}$ = –2 V; $I_C$ = –500 mA | 250 | 350 | – | |
| | | $V_{CE}$ = –2 V; $I_C$ = –1 A | 200 | 290 | – | |
| $V_{CEsat}$ | collector-emitter saturation voltage | $I_C$ = –100 mA; $I_B$ = –1 mA | – | – | –100 | mV |
| | | $I_C$ = –500 mA; $I_B$ = –50 mA | – | – | –125 | mV |
| | | $I_C$ = –1 A; $I_B$ = –50 mA | – | – | –250 | mV |
| $R_{CEsat}$ | equivalent on-resistance | $I_C$ = –500 mA; $I_B$ = –50 mA; note 1 | – | – | 250 | mΩ |
| $V_{BEon}$ | base-emitter turn-on voltage | $V_{CE}$ = –2 V; $I_C$ = –100 mA | – | – | –0.75 | V |
| $f_T$ | transition frequency | $I_C$ = –100 mA; $V_{CE}$ = –10 V; f = 100 MHz | 100 | – | – | MHz |
| $C_c$ | collector capacitance | $V_{CB}$ = –10 V; $I_E$ = $I_e$ = 0; f = 1 MHz | – | – | 28 | pF |

**Note**

1. Pulse test: $t_p \leq 300$ μs; $\delta \leq 0.02$.

## PACKAGE OUTLINE

**Plastic surface mounted package; 3 leads** **SOT23**

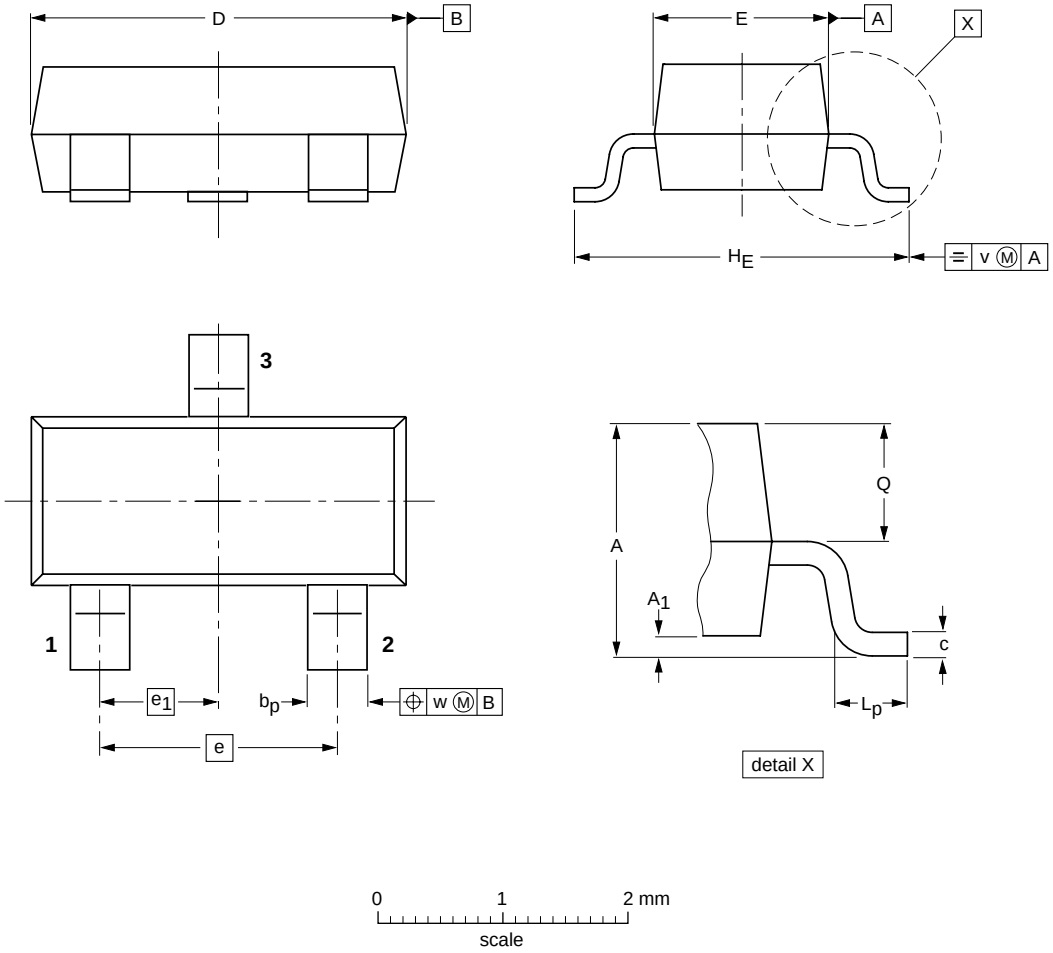


**DIMENSIONS (mm are the original dimensions)**

| UNIT | A | $A_1$ max. | $b_p$ | c | D | E | e | $e_1$ | $H_E$ | $L_p$ | Q | v | w |
|---|---|---|---|---|---|---|---|---|---|---|---|---|---|
| mm | 1.1<br>0.9 | 0.1 | 0.48<br>0.38 | 0.15<br>0.09 | 3.0<br>2.8 | 1.4<br>1.2 | 1.9 | 0.95 | 2.5<br>2.1 | 0.45<br>0.15 | 0.55<br>0.45 | 0.2 | 0.1 |

| OUTLINE VERSION | REFERENCES | | | | EUROPEAN PROJECTION | ISSUE DATE |
|---|---|---|---|---|---|---|
| | IEC | JEDEC | EIAJ | | | |
| SOT23 | | TO-236AB | | | | ~~97-02-28~~<br>99-09-13 |

**DATA SHEET STATUS**

| DOCUMENT STATUS(1) | PRODUCT STATUS(2) | DEFINITION |
|---|---|---|
| Objective data sheet | Development | This document contains data from the objective specification for product development. |
| Preliminary data sheet | Qualification | This document contains data from the preliminary specification. |
| Product data sheet | Production | This document contains the product specification. |

**Notes**

1. Please consult the most recently issued document before initiating or completing a design.
2. The product status of device(s) described in this document may have changed since this document was published and may differ in case of multiple devices. The latest product status information is available on the Internet at URL http://www.nxp.com.

**DISCLAIMERS**

**General** — Information in this document is believed to be accurate and reliable. However, NXP Semiconductors does not give any representations or warranties, expressed or implied, as to the accuracy or completeness of such information and shall have no liability for the consequences of use of such information.

**Right to make changes** — NXP Semiconductors reserves the right to make changes to information published in this document, including without limitation specifications and product descriptions, at any time and without notice. This document supersedes and replaces all information supplied prior to the publication hereof.

**Suitability for use** — NXP Semiconductors products are not designed, authorized or warranted to be suitable for use in medical, military, aircraft, space or life support equipment, nor in applications where failure or malfunction of an NXP Semiconductors product can reasonably be expected to result in personal injury, death or severe property or environmental damage. NXP Semiconductors accepts no liability for inclusion and/or use of NXP Semiconductors products in such equipment or applications and therefore such inclusion and/or use is at the customer's own risk.

**Applications** — Applications that are described herein for any of these products are for illustrative purposes only. NXP Semiconductors makes no representation or warranty that such applications will be suitable for the specified use without further testing or modification.

**Limiting values** — Stress above one or more limiting values (as defined in the Absolute Maximum Ratings System of IEC 60134) may cause permanent damage to the device. Limiting values are stress ratings only and operation of the device at these or any other conditions above those given in the Characteristics sections of this document is not implied. Exposure to limiting values for extended periods may affect device reliability.

**Terms and conditions of sale** — NXP Semiconductors products are sold subject to the general terms and conditions of commercial sale, as published at http://www.nxp.com/profile/terms, including those pertaining to warranty, intellectual property rights infringement and limitation of liability, unless explicitly otherwise agreed to in writing by NXP Semiconductors. In case of any inconsistency or conflict between information in this document and such terms and conditions, the latter will prevail.

**No offer to sell or license** — Nothing in this document may be interpreted or construed as an offer to sell products that is open for acceptance or the grant, conveyance or implication of any license under any copyrights, patents or other industrial or intellectual property rights.

**Export control** — This document as well as the item(s) described herein may be subject to export control regulations. Export might require a prior authorization from national authorities.

**Quick reference data** — The Quick reference data is an extract of the product data given in the Limiting values and Characteristics sections of this document, and as such is not complete, exhaustive or legally binding.

# *NXP Semiconductors*

## Customer notification

This data sheet was changed to reflect the new company name NXP Semiconductors. No changes were made to the content, except for the legal definitions and disclaimers.

## Contact information

For additional information please visit: **http://www.nxp.com**
For sales offices addresses send e-mail to: **salesaddresses@nxp.com**

© NXP B.V. 2009

All rights are reserved. Reproduction in whole or in part is prohibited without the prior written consent of the copyright owner.

The information presented in this document does not form part of any quotation or contract, is believed to be accurate and reliable and may be changed without notice. No liability will be accepted by the publisher for any consequence of its use. Publication thereof does not convey nor imply any license under patent- or other industrial or intellectual property rights.

Printed in The Netherlands R75/01/pp7 Date of release: 2003 Sep 29 Document order number: 9397 750 11899

founded by

PHILIPS

Компания «ЭлектроПласт» предлагает заключение долгосрочных отношений при поставках импортных электронных компонентов на взаимовыгодных условиях!

Наши преимущества:

- Оперативные поставки широкого спектра электронных компонентов отечественного и импортного производства напрямую от производителей и с крупнейших мировых складов;
- Поставка более 17-ти миллионов наименований электронных компонентов;
- Поставка сложных, дефицитных, либо снятых с производства позиций;
- Оперативные сроки поставки под заказ (от 5 рабочих дней);
- Экспресс доставка в любую точку России;
- Техническая поддержка проекта, помощь в подборе аналогов, поставка прототипов;
- Система менеджмента качества сертифицирована по Международному стандарту ISO 9001;
- Лицензия ФСБ на осуществление работ с использованием сведений, составляющих государственную тайну;
- Поставка специализированных компонентов (Xilinx, Altera, Analog Devices, Intersil, Interpoint, Microsemi, Aeroflex, Peregrine, Syfer, Eurofarad, Texas Instrument, Miteq, Cobham, E2V, MA-COM, Hittite, Mini-Circuits,General Dynamics и др.);

Помимо этого, одним из направлений компании «ЭлектроПласт» является направление «Источники питания». Мы предлагаем Вам помощь Конструкторского отдела:

- Подбор оптимального решения, техническое обоснование при выборе компонента;
- Подбор аналогов;
- Консультации по применению компонента;
- Поставка образцов и прототипов;
- Техническая поддержка проекта;
- Защита от снятия компонента с производства.

**Как с нами связаться**

**Телефон:** 8 (812) 309 58 32 (многоканальный)
**Факс:** 8 (812) 320-02-42
**Электронная почта:** org@eplast1.ru
**Адрес:** 198099, г. Санкт-Петербург, ул. Калинина, дом 2, корпус 4, литера А.