Data Sheet, Rev. 3.1, Aug. 2007

# TLE6251DS

## High Speed CAN-Transceiver with Bus wake-up

Automotive Power

Never stop thinking

**Edition 2007-08-20**

**Published by**
**Infineon Technologies AG**
**81726 Munich, Germany**

**© 2005 Infineon Technologies AG**
**All Rights Reserved.**

**Legal Disclaimer**

The information given in this document shall in no event be regarded as a guarantee of conditions or characteristics. With respect to any examples or hints given herein, any typical values stated herein and/or any information regarding the application of the device, Infineon Technologies hereby disclaims any and all warranties and liabilities of any kind, including without limitation, warranties of non-infringement of intellectual property rights of any third party.

**Information**

For further information on technology, delivery terms and conditions and prices, please contact the nearest Infineon Technologies Office (**www.infineon.com**).

**Warnings**

Due to technical requirements, components may contain dangerous substances. For information on the types in question, please contact the nearest Infineon Technologies Office.

Infineon Technologies components may be used in life-support devices or systems only with the express written approval of Infineon Technologies, if a failure of such components can reasonably be expected to cause the failure of that life-support device or system or to affect the safety or effectiveness of that device or system. Life support devices or systems are intended to be implanted in the human body or to support and/or maintain and sustain and/or protect human life. If they fail, it is reasonable to assume that the health of the user or other persons may be endangered.

## Features

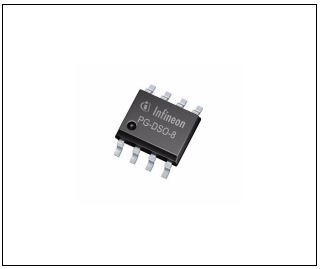


- CAN data transmission rate up to 1 Mbaud
- Compatible to ISO/DIS 11898
- Supports 12 V and 24 V automotive applications
- Low power mode with remote wake-up via CAN bus
- Wake signaling by RxD change
- No BUS load in stand-by mode
- Wide common mode range for electromagnetic immunity (EMI)
- Digital inputs compatible to 3.3 and 5 V logic devices
- CAN short circuit proof to ground, battery and $V_{CC}$
- Split termination to stabilize the recessive level
- TxD time-out function
- Overtemperature protection
- Protected against automotive transients
- Green Product (RoHS compliant)
- AEC Qualified

## Description

The CAN-transceiver TLE6251DS is a monolithic integrated circuit in a PG-DSO-8 package for high speed differential mode data transmission (up to 1 Mbaud) and reception in automotive and industrial applications. It works as an interface between the CAN protocol controller and the physical bus lines compatible to ISO/DIS 11898.

As a successor to the first generation of HS CAN (TLE6250), the TLE6251DS is designed to provide an excellent passive behavior when the transceiver is switched off (mixed networks, terminal 15/30 applications) and a remote wake-up capability via CAN bus in low power mode. This supports networks with partially un-powered nodes.

The TLE6251DS has two operation modes, the normal and the stand-by mode. These modes can be chosen by the STB pin. If the TLE6251DS is in stand-by mode and a message on the bus is

| Type | Package |
|---|---|
| TLE6251DS | PG-DSO-8 |

detected, the TLE6251DS changes the level at the RxD pin corresponding to the bus signal (wake-up flag).

The TLE6251DS is also designed to withstand the severe conditions of automotive applications and to support 12 V and 24 V applications.

The IC is based on the Smart Power Technology SPT® which allows bipolar and CMOS control circuitry in accordance with DMOS power devices existing on the same monolithic circuit.

## Pin Configuration and Definitions

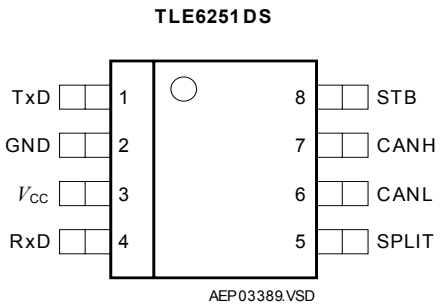


**Figure 1** **Pin Configuration** (top view)

**Table 1** **Pin Definitions and Functions**

| Pin No. | Symbol | Function |
|---|---|---|
| 1 | TxD | **CAN transmit data input;** 20 kΩ pull-up, LOW in dominant state |
| 2 | GND | **Ground** |
| 3 | $V_{CC}$ | **5 V supply input;** block to GND with 100 nF ceramic capacitor |
| 4 | RxD | **CAN receive data output;** LOW in dominant state |
| 5 | SPLIT | **Split termination output;** to support the recessive voltage level of the bus lines |
| 6 | CANL | **Low line input;** LOW in dominant state |
| 7 | CANH | **High line output;** HIGH in dominant state |
| 8 | STB | **Mode control input;** internal pull-up, see **Figure 3** |

## Functional Block Diagram

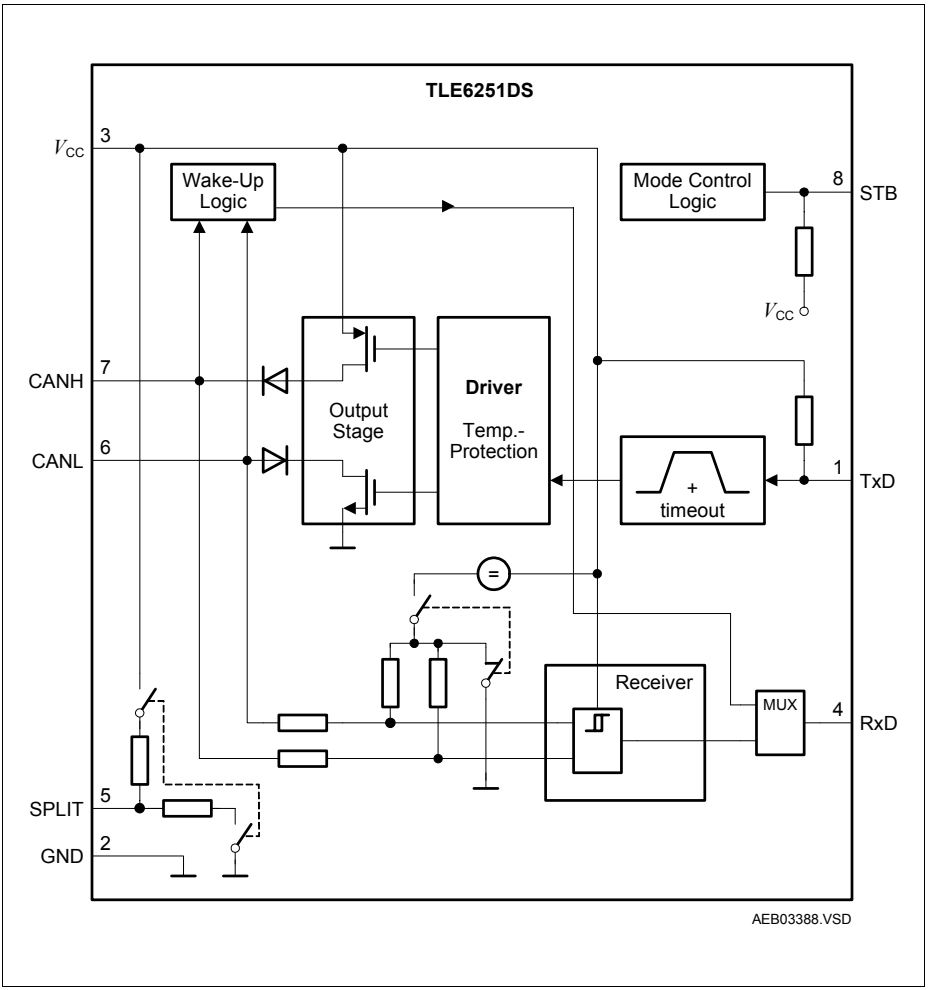


**Figure 2** **Functional Block Diagram**

## Application Information

The TLE6251DS has two operation modes, the normal and the standby mode. These modes can be controlled with the STB pin (see **Figure 3**, **Table 2**). The STB pin has an implemented pull-up, so if there is no signal applied to STB or STB = HIGH, the standby mode is activated. To transfer the TLE6251DS into the normal mode, STB has to be switched to LOW.

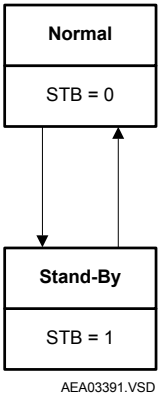


**Figure 3 Mode State Diagram**

**Table 2 Truth Table**

| Mode | STB | Event | RxD | BUS Termination |
|---|---|---|---|---|
| Normal | low | bus dominant | low | $V_{CC}/2$ |
| | | bus recessive | high | |
| Stand by | high | wake-up via CAN bus detected | low/high[1)] | GND |
| | | no wake-up detected | high | |

[1)] Signal at RxD changes corresponding to the bus signal during stand by mode. See **Figure 6**

## Normal Mode

This mode is designed for the normal data transmission/reception within the HS-CAN network.

### Transmission

The signal from the µC is applied to the TxD input of the TLE6251DS. Now the bus driver switches the CANH/L output stages to transfer this input signal to the CAN bus lines.

### TxD Time-out Feature

If the TxD signal is dominant for a time $t > t_{TxD}$ the TxD time-out function deactivates the transmission of the signal at the bus. This is realized to prevent the bus from being blocked permanently dominant due to an error.

The transmission is released again, after a rising edge at TxD has been detected.

### Reduced Electromagnetic Emission

The bus driver has an implemented control to reduce the electromagnetic emission (EME). This is achieved by controlling the symmetry of the slope, resp. of CANH and CANL.

### Overtemperature

The driver stages are protected against overtemperature. Exceeding the shutdown temperature results in deactivation of the driving stages at CANH/L. To avoid a bit failure after cooling down, the signals can be transmitted again only after a dominant to recessive edge at TxD.

**Figure 4** shows the way how the transmission stage is deactivated and activated again. First an over temperature condition causes the transmission stage to deactivate. After the over temperature condition is no longer present, the transmission is only possible after the TxD signal has changed to recessive level.

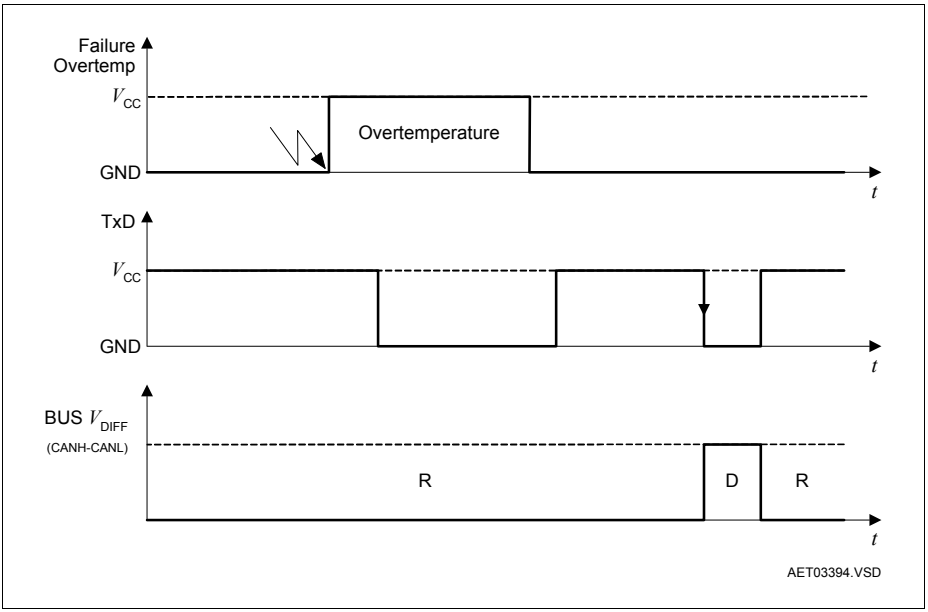


**Figure 4 Release of the Transmission after Overtemperature**

### Reception

The analog CAN bus signals are converted into a digital signal at RxD via the differential input receiver. The RxD signal is switched to RxD output pin via the multiplexer (MUX), see **Figure 2**.

In normal mode the split pin is used to stabilize the recessive common mode signal.

### Standby Mode

The standby mode is designed to switch the TLE6251DS into a low power mode with minimum current consumption. The driving stages and the receiver are deactivated. Only the relevant circuitry to guarantee a correct handling of the CAN bus wake-up is still active. This wake-up receiver is also designed to show an excellent immunity against electromagnetic noise (EMI).

### Change into Standby Mode during CAN Bus Failure

It is possible to change from normal mode into the standby mode if the bus is dominant due to a bus failure without setting the RxD wake flag to LOW. The advantage is, that the TLE6251DS can be kept in the standby mode even if a bus failure occurs.

**Figure 5** shows this mechanism in detail. During a bus network failure, the bus might be dominant. Normal communication is not possible until the failure is removed. To reduce the current consumption, it makes sense to switch over to standby mode. This is possible with the

TLE6251DS. If the dominant signal switches back to recessive level, e.g. failure removed, a wake-up via CAN bus (recessive to dominant signal detected) is possible.

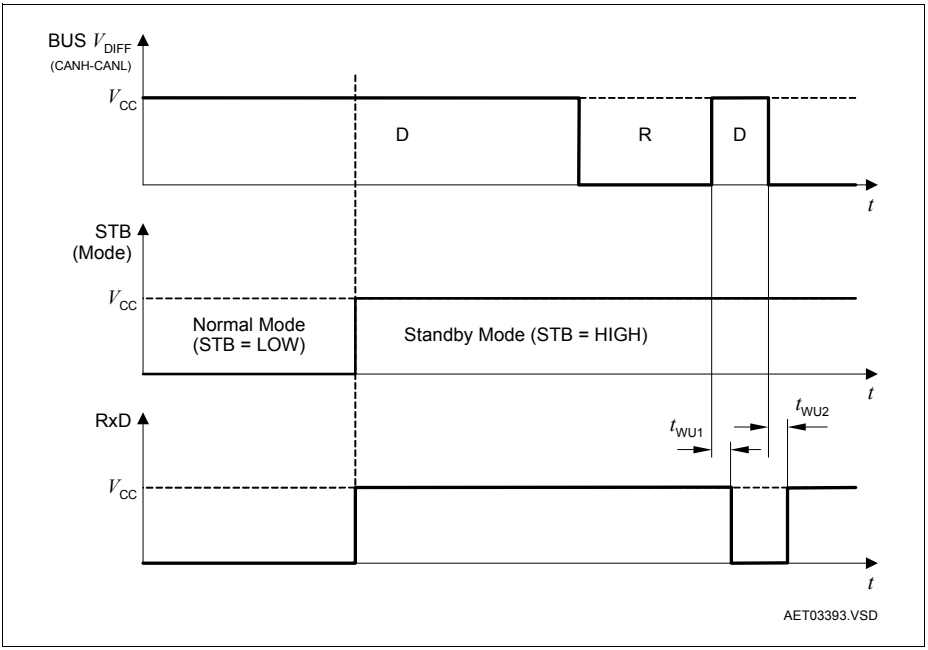


**Figure 5 Go-To Standby Mode during Bus Dominant Condition**

### Wake-up via CAN Message

During standby mode, a dominant CAN message on the bus longer than the filtering time $t > t_{WU1}$, leads to the activation of the wake-up. The wake-up during standby mode is signaled with the RxD output pin. A dominant signal longer $t > t_{WU1}$ on the CAN bus switches the RxD level to LOW, with a following recessive signal on the CAN bus longer $t > t_{WU2}$ the RxD level is switched to high, see **Figure 6**.

The µC is able to detect this change at RxD and switch the transceiver into the normal mode.

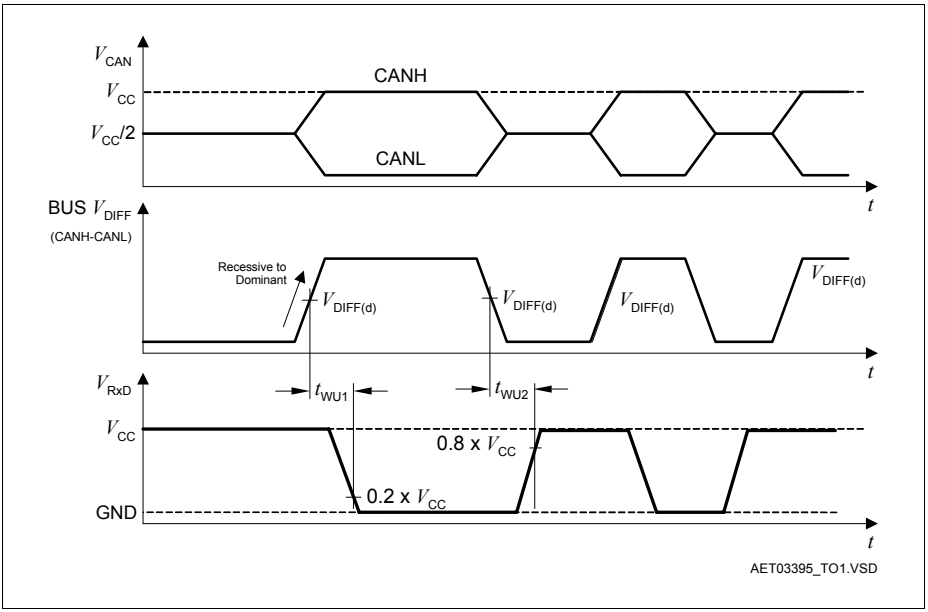


**Figure 6 Wake-up behavior**

### Split Circuit

The split circuitry is activated during normal mode and deactivated (SPLIT pin floating) during standby mode. The SPLIT pin is used to stabilize the recessive common mode signal in normal mode. This is realized with a stabilized voltage of 0.5 $V_{CC}$ at SPLIT.

A correct application of the SPLIT pin is shown in **Figure 7**. The split termination for the left and right node is realized with two 60 Ω resistances and one 10 nF capacitor. The center node in this example is a stub node and the recommended value for the split resistances is 1.5 kΩ.

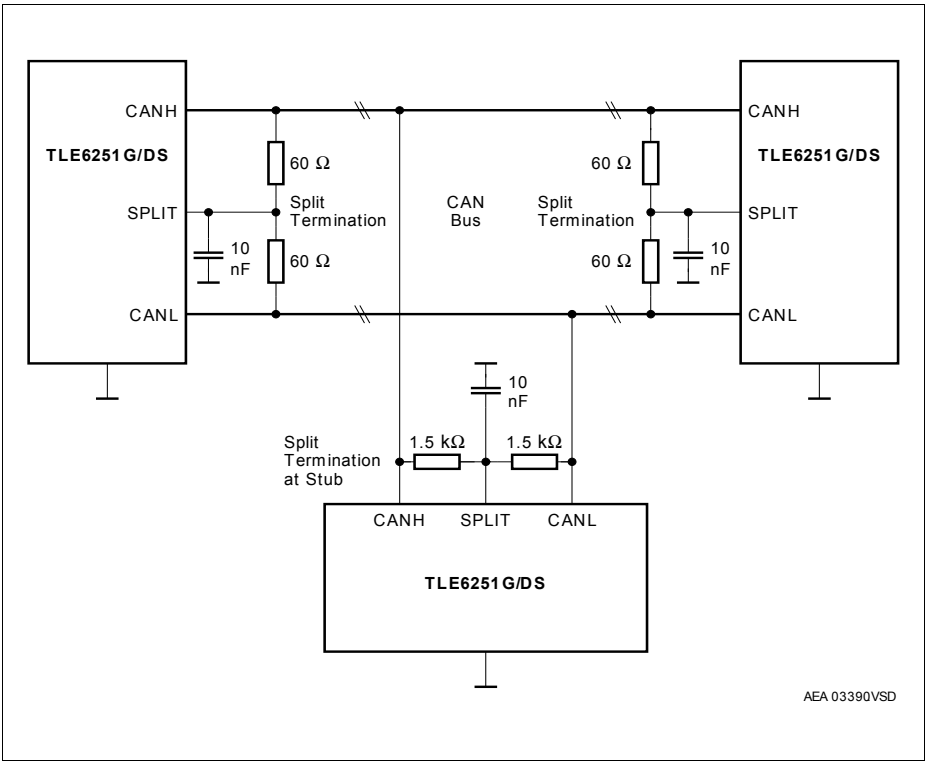


**Figure 7 Application of the SPLIT Pin for Normal Nodes and one Stub Node**

## Other Features

### Fail Safe

If the device is supplied but there is no signal at the digital inputs, the TxD and STB have an internal pull-up path, to prevent the transceiver to switch into the normal mode or send a dominant signal on the bus.

### Un-supplied Node

The CANH/CANL pins remain high ohmic, if the transceiver is un-supplied.

**Table 3 Absolute Maximum Ratings**

| Parameter | Symbol | Limit Values | | Unit | Remarks |
|---|---|---|---|---|---|
| | | Min. | Max. | | |
| **Voltages** | | | | | |
| Supply voltage | $V_{CC}$ | -0.3 | 5.5 | V | – |
| CAN bus voltage (CANH, CANL) | $V_{CANH/L}$ | -32 | 40 | V | – |
| CAN bus differential voltage CANH, CANL, SPLIT | $V_{CAN\ diff}$ | -40 | 40 | V | CANH - CANL < \|40 V\|<br>CANH - SPLIT < \|40 V\|<br>CANL - SPLIT < \|40 V\| |
| Input voltage at SPLIT | $V_{SPLIT}$ | -27 | 40 | V | – |
| Logic voltages at STB, TxD, RxD | $V_I$ | -0.3 | $V_{CC}$ | V | 0 V < $V_{CC}$ < 5.5 V |
| Electrostatic discharge voltage at CANH, CANL, SPLIT vs. GND | $V_{ESD}$ | -6 | 6 | kV | human body model (100 pF via 1.5 kΩ) |
| Electrostatic discharge voltage | $V_{ESD}$ | -2 | 2 | kV | human body model (100 pF via 1.5 kΩ) |
| **Temperatures** | | | | | |
| Storage temperature | $T_j$ | -40 | 150 | °C | – |

*Note: Maximum ratings are absolute ratings; exceeding any one of these values may cause irreversible damage to the integrated circuit.*

**Table 4 Operating Range**

| Parameter | Symbol | Limit Values | | Unit | Remarks |
|---|---|---|---|---|---|
| | | Min. | Max. | | |
| Supply voltage | $V_{CC}$ | 4.75 | 5.25 | V | – |
| Junction temperature | $T_j$ | -40 | 150 | °C | – |
| **Thermal Resistances** | | | | | |
| Junction ambient | $R_{thj-a}$ | – | 185 | K/W | 1) |
| **Thermal Shutdown (junction temperature)** | | | | | |
| Thermal shutdown temperature | $T_{jsD}$ | 150 | 190 | °C | – |
| Thermal shutdown hyst. | $\Delta T$ | – | 10 | K | – |

1) Calculation of the junction temperature $T_j = T_{amb} + P \times R_{thj-a}$

**Table 5 Electrical Characteristics**

4.75 V < $V_{CC}$ < 5.25 V; $R_L$ = 60 Ω; -40 °C < $T_j$ < 150 °C; all voltages with respect to ground; positive current flowing into pin; unless otherwise specified.

| Parameter | Symbol | Limit Values | | | Unit | Remarks |
|---|---|---|---|---|---|---|
| | | Min. | Typ. | Max. | | |
| **Current Consumption** | | | | | | |
| Current consumption | $I_{CC}$ | – | 6 | 10 | mA | recessive state; $V_{TxD} = V_{CC}$ |
| Current consumption | $I_{CC}$ | – | 45 | 70 | mA | dominant state; $V_{TxD}$ = 0 V |
| Current consumption | $I_{CC,stb}$ | – | 20 | 30 | µA | stand-by mode; TxD = high |
| **Receiver Output RxD** | | | | | | |
| HIGH level output current | $I_{RD,H}$ | – | -4 | -2 | mA | $V_{RD} = 0.8 \times V_{CC}$ |
| | | – | -100 | – | µA | stand-by mode |
| LOW level output current | $I_{RD,L}$ | 2 | 4 | – | mA | $V_{RD} = 0.2 \times V_{CC}$ |
| Short circuit current | $I_{SC,RxD}$ | – | 15 | 20 | mA | – |
| **Transmission Input TxD** | | | | | | |
| HIGH level input voltage threshold | $V_{TD,H}$ | 2.0 | – | – | V | recessive state |
| LOW level input voltage threshold | $V_{TD,L}$ | – | – | 0.8 | V | dominant state |
| TxD pull-up resistance | $R_{TD}$ | 10 | 20 | 40 | kΩ | – |
| TxD input hysteresis | $V_{TD\ hys}$ | – | 200 | – | mV | – |
| **Stand By Input (pin STB)** | | | | | | |
| HIGH level input voltage threshold | $V_{STB,H}$ | 2.0 | – | – | V | normal mode |
| LOW level input voltage threshold | $V_{STB,L}$ | – | – | 0.8 | V | receive-only mode |
| STB pull-up resistance | $R_{STB}$ | 10 | 20 | 40 | kΩ | – |
| STB input hysteresis | $V_{STB\ hys}$ | – | 200 | – | mV | – |

**Table 5 Electrical Characteristics** (cont'd)

4.75 V < $V_{CC}$ < 5.25 V; $R_L$ = 60 Ω; -40 °C < $T_j$ < 150 °C; all voltages with respect to ground; positive current flowing into pin; unless otherwise specified.

| Parameter | Symbol | Limit Values | | | Unit | Remarks |
|---|---|---|---|---|---|---|
| | | Min. | Typ. | Max. | | |
| **Split Termination Output (pin SPLIT)** | | | | | | |
| Split output voltage | $V_{SPLIT}$ | 0.3 × $V_{CC}$ | 0.5 × $V_{CC}$ | 0.7 × $V_{CC}$ | V | normal mode; -500 µA < $I_{SPLIT}$ < 500 µA |
| | $V_{SPLIT}$ | 0.45× $V_{CC}$ | 0.5 × $V_{CC}$ | 0.55× $V_{CC}$ | V | normal mode; no Load |
| Leakage current | $I_{SPLIT}$ | -5 | 0 | 5 | µA | standby mode; -22 V < $V_{SPLIT}$ < 35 V |
| SPLIT output resistance | $R_{SPLIT}$ | – | 600 | – | Ω | – |
| **Bus Receiver** | | | | | | |
| Differential receiver threshold voltage, normal mode | $V_{diff,rdN}$ | – | 0.8 | 0.9 | V | recessive to dominant |
| | $V_{diff,drN}$ | 0.5 | 0.6 | – | V | dominant to recessive |
| Differential receiver threshold, low power mode | $V_{diff,rdLP}$ | | 0.9 | 1.15 | V | recessive to dominant |
| | $V_{diff,drLP}$ | 0.4 | 0.8 | | V | dominant to recessive |
| Common Mode Range | CMR | -12 | – | 12 | V | $V_{CC}$ = 5 V |
| Differential receiver hysteresis | $V_{diff,hys}$ | – | 200 | – | mV | – |
| CANH, CANL input resistance | $R_i$ | 10 | 20 | 30 | kΩ | recessive state |
| Differential input resistance | $R_{diff}$ | 20 | 40 | 60 | kΩ | recessive state |
| **Bus Transmitter** | | | | | | |
| CANL/CANH recessive output voltage | $V_{CANL/H}$ | 2.0 | 2.5 | 3.0 | V | $V_{TxD}$ = $V_{CC}$; no load |
| CANH, CANL recessive output voltage difference | $V_{diff}$ | -500 | – | 50 | mV | $V_{TxD}$ = $V_{CC}$; no load |
| CANL dominant output voltage | $V_{CANL}$ | 0.5 | – | 2.25 | V | $V_{TxD}$ = 0 V; $V_{CC}$ = 5 V |
| CANH dominant output voltage | $V_{CANH}$ | 2.75 | – | 4.5 | V | $V_{TxD}$ = 0 V; $V_{CC}$ = 5 V |

**Table 5 Electrical Characteristics** (cont'd)

4.75 V < $V_{CC}$ < 5.25 V; $R_L$ = 60 Ω; -40 °C < $T_j$ < 150 °C; all voltages with respect to ground; positive current flowing into pin; unless otherwise specified.

| Parameter | Symbol | Limit Values | | | Unit | Remarks |
|---|---|---|---|---|---|---|
| | | Min. | Typ. | Max. | | |
| CANH, CANL dominant output voltage difference $V_{diff} = V_{CANH} - V_{CANL}$ | $V_{diff}$ | 1.5 | – | 3.0 | V | $V_{TxD}$ = 0 V; $V_{CC}$ = 5 V |
| CANL short circuit current | $I_{CANLsc}$ | 50 | 80 | 200 | mA | $V_{CANLshort}$ = 18 V |
| CANH short circuit current | $I_{CANHsc}$ | -200 | -80 | -50 | mA | $V_{CANHshort}$ = 0 V |
| Leakage current | $I_{CANH,L,lk}$ | - | - | -5 | µA | $V_{CC}$ = 0 V; 0 V < $V_{CANH,L}$ < 5 V |
| **Dynamic CAN-Transceiver Characteristics** | | | | | | |
| Propagation delay TxD-to-RxD LOW (recessive to dominant) | $t_{d(L),TR}$ | – | 150 | 255 | ns | $C_L$ = 47 pF; $R_L$ = 60 Ω; $V_{CC}$ = 5 V; $C_{RxD}$ = 15 pF |
| Propagation delay TxD-to-RxD HIGH (dominant to recessive) | $t_{d(H),TR}$ | – | 150 | 255 | ns | $C_L$ = 47 pF; $R_L$ = 60 Ω; $V_{CC}$ = 5 V; $C_{RxD}$ = 15 pF |
| Propagation delay TxD LOW to bus dominant | $t_{d(L),T}$ | – | 50 | 120 | ns | $C_L$ = 47 pF; $R_L$ = 60 Ω; $V_{CC}$ = 5 V |
| Propagation delay TxD HIGH to bus recessive | $t_{d(H),T}$ | – | 50 | 120 | ns | $C_L$ = 47 pF; $R_L$ = 60 Ω; $V_{CC}$ = 5 V |
| Propagation delay bus dominant to RxD LOW | $t_{d(L),R}$ | – | 100 | 135 | ns | $C_L$ = 47 pF; $R_L$ = 60 Ω; $V_{CC}$ = 5 V; $C_{RxD}$ = 15 pF |
| Propagation delay bus recessive to RxD HIGH | $t_{d(H),R}$ | – | 100 | 135 | ns | $C_L$ = 47 pF; $R_L$ = 60 Ω; $V_{CC}$ = 5 V; $C_{RxD}$ = 15 pF |
| Min. dominant time for bus wake-up signal (RxD high to low) | $t_{WU1}$ | 0.75 | 3 | 5 | µs | $t_{WU1} = t_{d(L),R} + t_{WU}$ see **Figure 6** |

**Table 5 Electrical Characteristics** (cont'd)

4.75 V < $V_{CC}$ < 5.25 V; $R_L$ = 60 Ω; -40 °C < $T_j$ < 150 °C; all voltages with respect to ground; positive current flowing into pin; unless otherwise specified.

| Parameter | Symbol | Limit Values | | | Unit | Remarks |
|---|---|---|---|---|---|---|
| | | Min. | Typ. | Max. | | |
| Min. recessive time for bus wake-up signal (RxD low to high) | $t_{WU2}$ | 0.75 | 3 | 5 | µs | $t_{WU2} = t_{d(H),R} + t_{WU}$ see **Figure 6** |
| TxD permanent dominant disable time | $t_{TxD}$ | 0.3 | – | 1.0 | ms | – |

## Diagrams

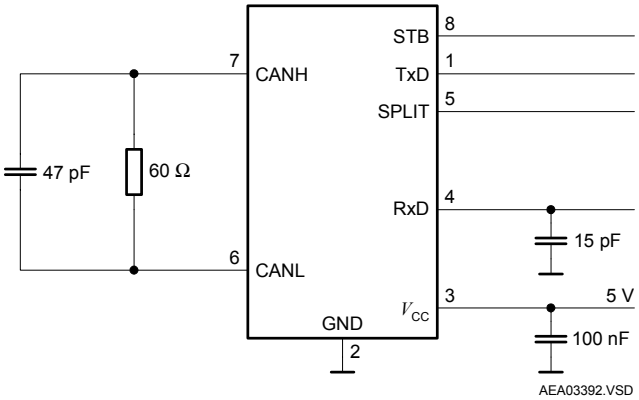


**Figure 8** **Test Circuits for Dynamic Characteristics**

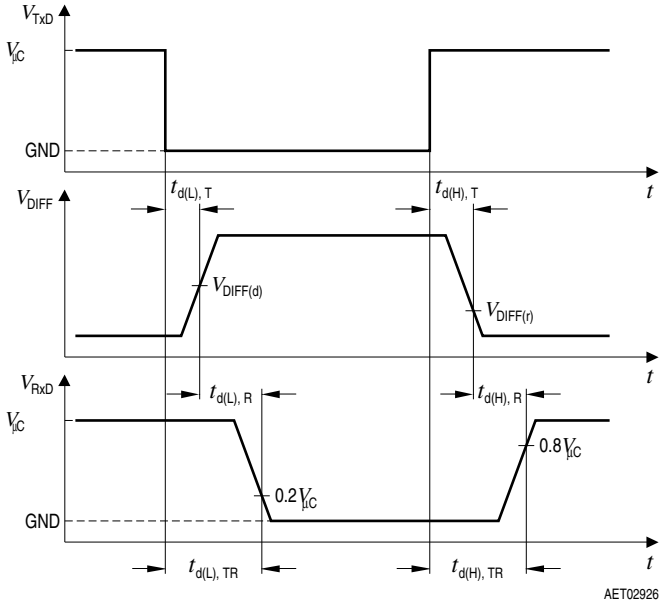


**Figure 9 Timing Diagrams for Dynamic Characteristics**

## Application

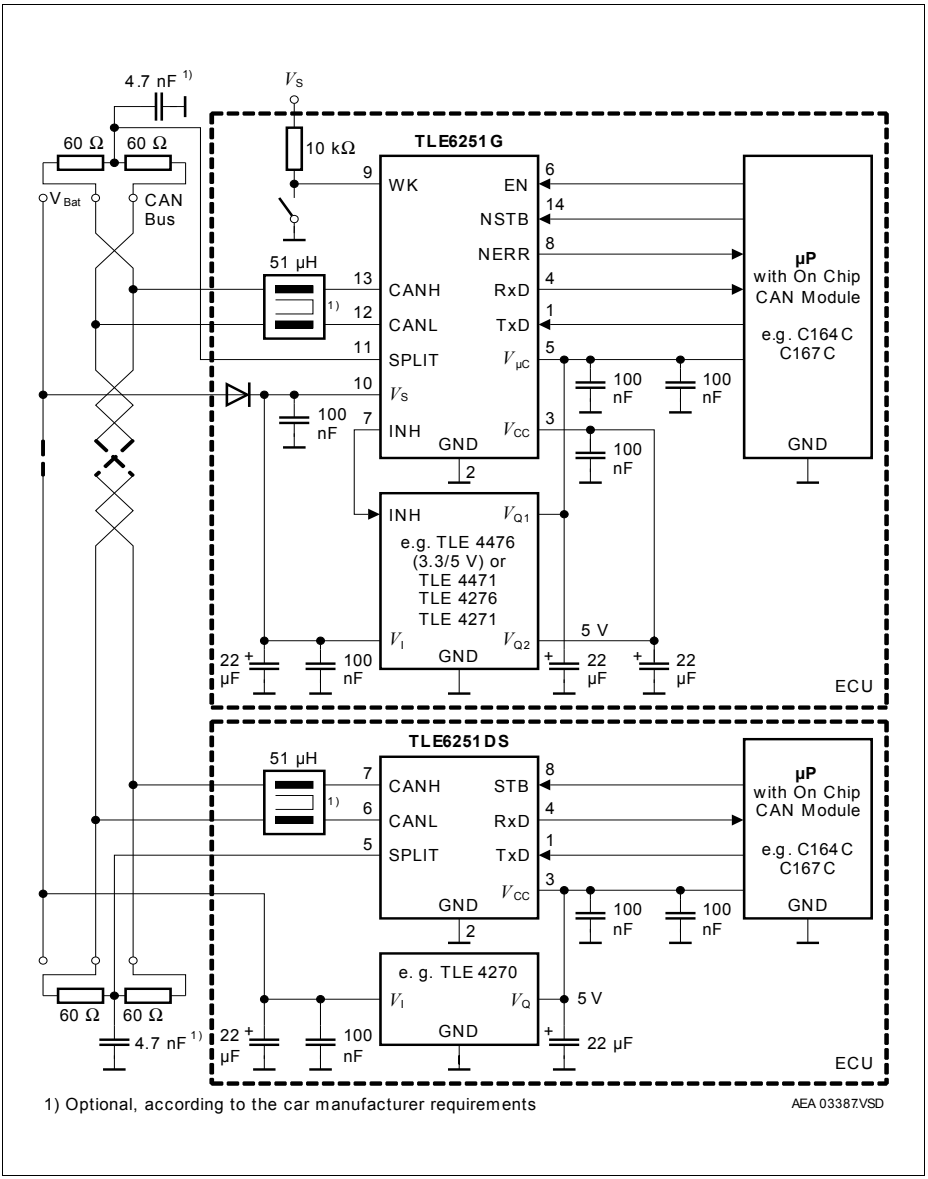


**Figure 10 Application Circuit**

## Package Outlines

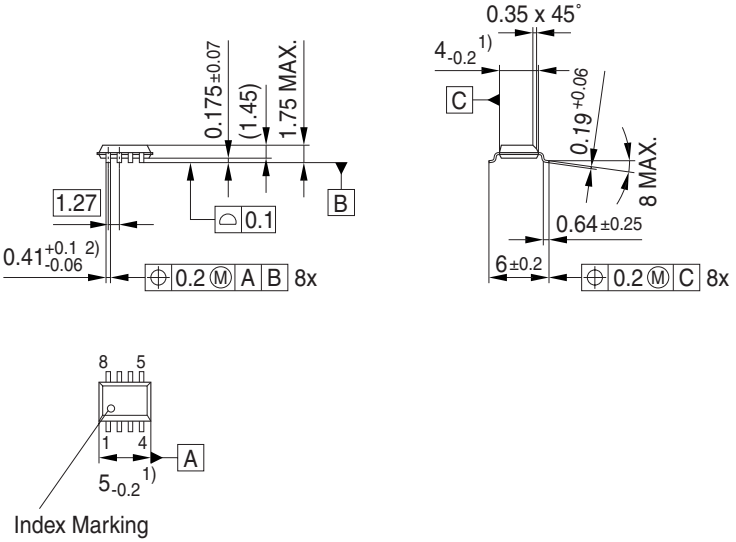


1) Does not include plastic or metal protrusion of 0.15 max. per side
2) Lead width can be 0.61 max. in dambar area

GPS01181

**Figure 11** **PG-DSO-8** (PG-DSO-8-16 Plastic Dual Small Outline)

**Green Product** (RoHS compliant)

To meet the world-wide customer requirements for environmentally friendly products and to be compliant with government regulations the device is available as a green product. Green products are RoHS-Compliant (i.e Pb-free finish on leads and suitable for Pb-free soldering according to IPC/JEDEC J-STD-020).

You can find all of our packages, sorts of packing and others in our Infineon Internet Page “Products”: **http://www.infineon.com/products**.

SMD = Surface Mounted Device

Dimensions in mm

## Revision History

| Version | Date | Changes |
|---|---|---|
| Rev. 3.1 | 2007-08-20 | RoHS-compliant version of the TLE6251DS<br>• All pages: Infineon logo updated<br>• Page 3:<br>“added AEC qualified” and “RoHS” logo, “Green Product (RoHS compliant)” and “AEC qualified” statement added to feature list, package name changed to RoHS compliant versions, package picture updated, ordering code removed<br>• Page 21:<br>Change package drawing to GPS01181<br>Package name changed to RoHS compliant versions, “Green Product” description added<br>• added Revision History<br>• updated Legal Disclaimer |

Компания «ЭлектроПласт» предлагает заключение долгосрочных отношений при поставках импортных электронных компонентов на взаимовыгодных условиях!

Наши преимущества:

- Оперативные поставки широкого спектра электронных компонентов отечественного и импортного производства напрямую от производителей и с крупнейших мировых складов;
- Поставка более 17-ти миллионов наименований электронных компонентов;
- Поставка сложных, дефицитных, либо снятых с производства позиций;
- Оперативные сроки поставки под заказ (от 5 рабочих дней);
- Экспресс доставка в любую точку России;
- Техническая поддержка проекта, помощь в подборе аналогов, поставка прототипов;
- Система менеджмента качества сертифицирована по Международному стандарту ISO 9001;
- Лицензия ФСБ на осуществление работ с использованием сведений, составляющих государственную тайну;
- Поставка специализированных компонентов (Xilinx, Altera, Analog Devices, Intersil, Interpoint, Microsemi, Aeroflex, Peregrine, Syfer, Eurofarad, Texas Instrument, Miteq, Cobham, E2V, MA-COM, Hittite, Mini-Circuits,General Dynamics и др.);

Помимо этого, одним из направлений компании «ЭлектроПласт» является направление «Источники питания». Мы предлагаем Вам помощь Конструкторского отдела:

- Подбор оптимального решения, техническое обоснование при выборе компонента;
- Подбор аналогов;
- Консультации по применению компонента;
- Поставка образцов и прототипов;
- Техническая поддержка проекта;
- Защита от снятия компонента с производства.

**Как с нами связаться**

**Телефон:** 8 (812) 309 58 32 (многоканальный)
**Факс:** 8 (812) 320-02-42
**Электронная почта:** org@eplast1.ru
**Адрес:** 198099, г. Санкт-Петербург, ул. Калинина, дом 2, корпус 4, литера А.