This document was generated on 05/28/2010

PLEASE CHECK WWW.MOLEX.COM FOR LATEST PART INFORMATION

Part Number: 0751961014
Status: Active
Overview: vhdm__hsd
Description: 2.00mm (.079") Pitch 6-Row VHDM® Lite Backplane Header, Right Shield End Version, 6 Row, 60 Circuits, Pin Length 5.15mm (.203")

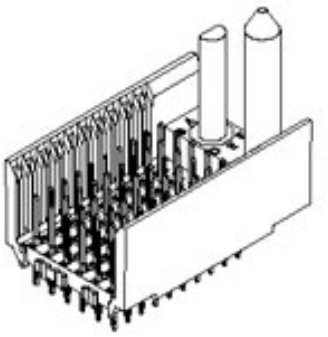

Series image - Reference only

Documents:
Drawing (PDF)
RoHS Certificate of Compliance (PDF)
Product Specification PS-74031-999 (PDF)

General

Product Family	Backplane Connectors
Series	75196
Application	Backplane
Application Tooling Documents	Tooling Manual
Comments	Keying Position A
Component Type	PCB Header
Overview	vhdm__hsd
Product Name	VHDM Lite®
Style	N/A

Physical

Circuits (Loaded)	60
Circuits (maximum)	60
Color - Resin	Black
Durability (mating cycles max)	200
First Mate / Last Break	No
Guide to Mating Part	Yes
Keying to Mating Part	Yes
Material - Metal	High Performance Alloy (HPA), Stainless Steel
Material - Plating Mating	Gold
Material - Plating Termination	Tin-Lead
Material - Resin	High Temperature Thermoplastic
Number of Columns	10
Number of Pairs	Open Pin Field
Number of Rows	6
Orientation	Vertical
PC Tail Length (in)	0.098 In
PC Tail Length (mm)	2.50 mm
PCB Locator	No
PCB Retention	Yes
PCB Thickness Recommended (in)	0.071 In
PCB Thickness Recommended (mm)	1.80 mm
Packaging Type	Tube
Pitch - Mating Interface (in)	0.079 In
Pitch - Mating Interface (mm)	2.00 mm
Pitch - Term. Interface (in)	0.079 In
Pitch - Term. Interface (mm)	2.00 mm
Plating min: Mating (µin)	30
Plating min: Mating (µm)	0.75
Plating min: Termination (µin)	30
Plating min: Termination (µm)	0.75
Polarized to PCB	No
Stackable	No
Surface Mount Compatible (SMC)	Yes

EU RoHS
RoHS Compliant by Exemption
REACH SVHC
Contains SVHC: No
Halogen-Free Status
Halogen-Free

China RoHS
50
Pb

Need more information on product environmental compliance?

Email productcompliance@molex.com
For a multiple part number RoHS Certificate of Compliance, click here

Please visit the Contact Us section for any non-product compliance questions.

Search Parts in this Series
75196Series

Mates With
75189 VHDM® Lite Board-to-Board Daughtercard

Use With
Backplane Modules

Application Tooling | **FAQ**
Tooling specifications and manuals are found by selecting the products below. Crimp Height Specifications are then contained in the Application Tooling Specification document.
Global

Description	Product #
VHDM® Signal Pin Inserter Repair Tool	0622015700
VHDM® Insertion Module for Advanced Mate Signal Header,	0622020207

Temperature Range - Operating	105°C	6 Row by 10 Wide, 20.00mm (.787")
Termination Interface: Style	Through Hole - Compliant Pin	

Electrical

Current - Maximum per Contact	1A
Data Rate	622.0 Mbps
Real Signals (per 25mm)	75
Shielded	No
Voltage - Maximum	120V AC (RMS)/DC

Material Info

Reference - Drawing Numbers

Product Specification	PS-74031-999
Sales Drawing	SD-75196-001

VHDM and Very High Density Metric are trademarks of Amphenol Corporation

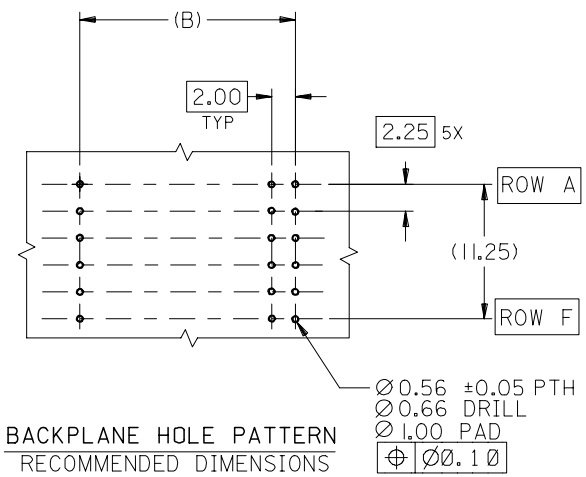

BACKPLANE HOLE PATTERN
RECOMMENDED DIMENSIONS

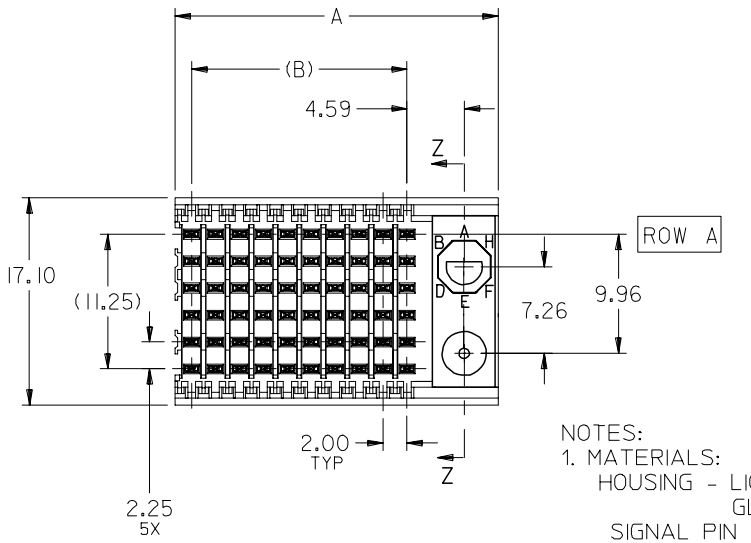

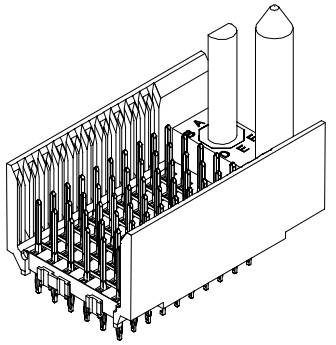

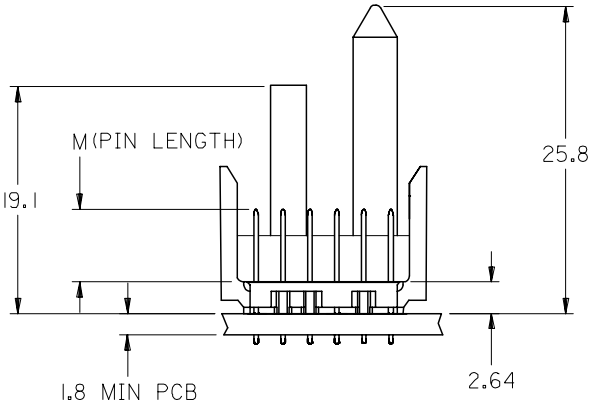

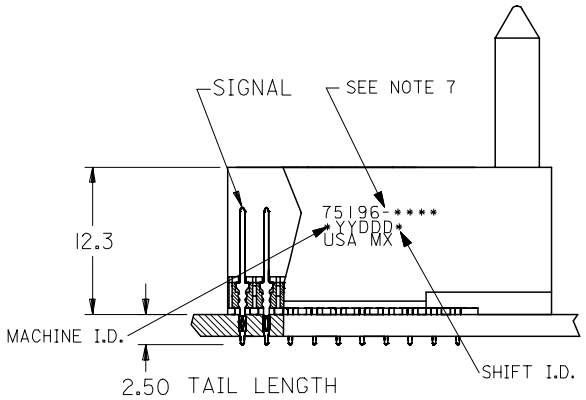

NOTES:
1. MATERIALS:
   HOUSING - LIQUID CRYSTAL POLYMER (LCP), GLASS-FILLED, UL 94V-0, COLOR: BLACK
   SIGNAL PIN - COPPER ALLOY
2. FINISHES:
   CONTACT AREA: SELECTIVE GOLD (Au)
   PCB TAILS: SELECTIVE TIN/LEAD (Sn/Pb) OR SELECTIVE MATTE TIN (Sn)
   NICKEL (Ni) OVERALL.
3. THIS PART CONFORMS TO MOLEX PRODUCT SPECIFICATION PS-74031-999
4. FOR MIXED CONTACT LENGTHS CONSULT MOLEX FOR AVAILABILITY
5. FOR SPECIFIC MATERIAL NUMBERS & MATING INFORMATION REFER TO SHEET 2
6. PACKAGE PER PK-74058-003
7. EITHER MARK PART WITH PART NUMBER & DATE CODE APPROXIMATELY WHERE SHOWN OR PLACE LABEL ON THE TUBE.

ADD LEADFREE PNs
EC NO: UCP2006-0059 2005/07/13
DRWN:KMULVEY 2005/07/13
CH'KD: APPR:SREED 2005/07/15
DESCRIPTION
REV E

QUALITY SYMBOLS
▼=0
▽=0

GENERAL TOLERANCES (UNLESS SPECIFIED)

	mm	INCH
4 PLACES	± ---	± ---
3 PLACES	± ---	± ---
2 PLACES	± ---	± ---
1 PLACE	± ---	± ---
ANGULAR ±1/2°		

DRAFT WHERE APPLICABLE MUST REMAIN WITHIN DIMENSIONS

DIMENSION STYLE: MM ONLY
SCALE: 2.5:1
DESIGN UNITS: METRIC
THIRD ANGLE PROJECTION

DRAWN BY	MBANDURA	DATE 2003/01/17
CHECKED BY	NMARTIN	DATE 2003/01/17
APPROVED BY	CBIXLER	DATE 2003/01/17

TITLE: VHDM LITE 6 ROW SHIELD END BACKPLANE SALES ASSEMBLY

MOLEX INCORPORATED

MATERIAL NO.: SEE SHEET 2
DOCUMENT NO.: SD-75196-001
SHEET NO.: 1 OF 2
SIZE: B

THIS DRAWING CONTAINS INFORMATION THAT IS PROPRIETARY TO MOLEX INCORPORATED AND SHOULD NOT BE USED WITHOUT WRITTEN PERMISSION

M/N 75196-( )	-**0*	-**1*	-**2*	-**3*	-**4*	-**5*	-**6*	-**7*	-**8*
KEYING PIN ORIENTATION	0	A	B	C	D	E	F	G	H

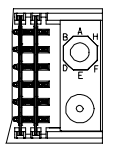

75196-****

NUMBER OF COLUMNS/PLATING
10 = 10 COLUMN TIN/LEAD
25 = 25 COLUMN TIN/LEAD
90 = 10 COLUMN MATTE TIN
85 = 25 COLUMN MATTE TIN

CONTACT LOAD (PIN HEIGHT)
1 = 4.75
2 = 6.25
3 = 4.25
4 = 5.15

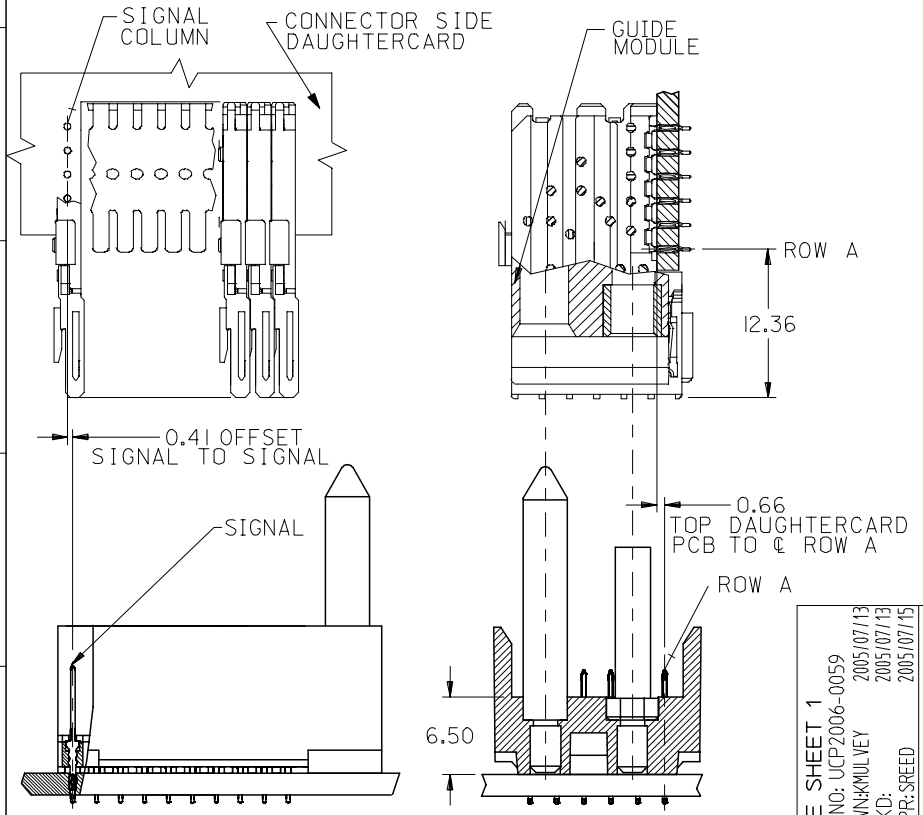

PART NUMBER	COLUMN	NUMBER OF SIGNAL PIN	NUMBER OF SHIELD	A	B	M	Au (um) THICKNESS	Sn (um) THICKNESS
75196-*0*1	10	60	0	27.00	18.00	4.75	0.76	0.76-1.52

75196-*5*1	25	150	0	57.00	48.00		0.76	

75196-*0*2	10	60	0	27.00	18.00	6.25	0.76	

75196 *5*2	25	150	0	57.00	48.00		0.76	

75196-*0*3	10	60	0	27.00	18.00	4.25	0.76	

75196-*5*3	25	150	0	57.00	48.00		0.76	

75196-*0*4	10	60	0	27.00	18.00	5.15	0.76	

75196-*5*4	25	150	0	57.00	48.00		0.76	

SEE SHEET 1
EC NO: UCP2006-0059 2005/07/13
DRWN: KMULVEY 2005/07/13
CHKD: 2005/07/15
APPR: SREED
DESCRIPTION
REV E

QUALITY SYMBOLS
▼=0
▽=0

GENERAL TOLERANCES (UNLESS SPECIFIED)

	mm	INCH
4 PLACES	± ---	± ---
3 PLACES	± ---	± ---
2 PLACES	± ---	± ---
1 PLACE	± ---	± ---
ANGULAR ±1/2°		

DRAFT WHERE APPLICABLE MUST REMAIN WITHIN DIMENSIONS

DIMENSION STYLE: MM ONLY
SCALE: 2.5:1
DESIGN UNITS: METRIC
THIRD ANGLE PROJECTION

		DATE
DRAWN BY	MBANDURA	2003/01/17
CHECKED BY	NMARTIN	2003/01/17
APPROVED BY	CBIXLER	2003/01/17

TITLE: VHDM LITE 6 ROW SHIELD END BACKPLANE SALES ASSEMBLY

MOLEX INCORPORATED

MATERIAL NO.: SEE CHART
DOCUMENT NO.: SD-75196-001
SHEET NO.: 2 OF 2
SIZE: B

THIS DRAWING CONTAINS INFORMATION THAT IS PROPRIETARY TO MOLEX INCORPORATED AND SHOULD NOT BE USED WITHOUT WRITTEN PERMISSION

Компания «ЭлектроПласт» предлагает заключение долгосрочных отношений при поставках импортных электронных компонентов на взаимовыгодных условиях!

Наши преимущества:

- Оперативные поставки широкого спектра электронных компонентов отечественного и импортного производства напрямую от производителей и с крупнейших мировых складов;
- Поставка более 17-ти миллионов наименований электронных компонентов;
- Поставка сложных, дефицитных, либо снятых с производства позиций;
- Оперативные сроки поставки под заказ (от 5 рабочих дней);
- Экспресс доставка в любую точку России;
- Техническая поддержка проекта, помощь в подборе аналогов, поставка прототипов;
- Система менеджмента качества сертифицирована по Международному стандарту ISO 9001;
- Лицензия ФСБ на осуществление работ с использованием сведений, составляющих государственную тайну;
- Поставка специализированных компонентов (Xilinx, Altera, Analog Devices, Intersil, Interpoint, Microsemi, Aeroflex, Peregrine, Syfer, Eurofarad, Texas Instrument, Miteq, Cobham, E2V, MA-COM, Hittite, Mini-Circuits,General Dynamics и др.);

Помимо этого, одним из направлений компании «ЭлектроПласт» является направление «Источники питания». Мы предлагаем Вам помощь Конструкторского отдела:

- Подбор оптимального решения, техническое обоснование при выборе компонента;
- Подбор аналогов;
- Консультации по применению компонента;
- Поставка образцов и прототипов;
- Техническая поддержка проекта;
- Защита от снятия компонента с производства.

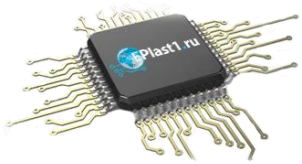

Как с нами связаться

Телефон: 8 (812) 309 58 32 (многоканальный)
Факс: 8 (812) 320-02-42
Электронная почта: org@eplast1.ru
Адрес: 198099, г. Санкт-Петербург, ул. Калинина, дом 2, корпус 4, литера А.