DURA-CON

All-Plastic Strip Connectors
Metal Shell Mil-C-83513 Connectors
Terminal Blocks Microedge
.050" D-microminiature

Cinch

Cinch Dura-Con™ connectors are designed for applications that require a rugged, durable, and high-performance interconnect. Dura-Con is the ideal connector for applications where weight and space must be kept to a minimum while maintaining maximum reliability. Miniaturized airborne electronics and data processing equipment, where shorter signal paths are needed, represent typical applications for these unique connectors.

The heart of the Dura-Con system is the Dura-Con pin contact. The Cinch Dura-Con pin contact is made from a precision miniature spring cable with a welded tip. The expanded cable provides seven spring members peripherally around the pin so that contact is maintained with the mating socket wall no matter what radial forces are applied. This spring may be flexed many times without any evidence of metal fatigue. Reliable mating is further ensured by protecting the pin contact in a tightly toleranced recessed cavity.

Cinch's family of Dura-Con connectors includes MIL-C-83513 Series connectors along with our own commercial equivalents. The commercial Dura-Con product line offers an expanded range of termination and hardware options for all-plastic and metal shell wire versions and right-angle and straight PC board mount "terminal blocks". Cinch also packages the Dura-Con contact in a very low profile plastic strip connector on .050" centers and in a line of high-density microminiature edge (Microedge) board connectors that meet the requirements of MIL-C-55302. Cinch has created a line of plastic and metal shell Dura-Con connector savers for very high mating cycle applications such as test equipment.

Termination Options:

Cinch offers the following termination methods for its Dura-Con connectors:

Insulated Wire - Insulated wire is crimped to the Dura-Con contacts then epoxy backpotted at the factory. Wire is available in standard lengths of 18, 24, 36, and 48 inches.

Uninsulated Wire - 24 AWG, gold-plated, uninsulated wire is crimped to the Dura-Con contact at the factory. Wire is available in standard lengths of 0.5, 1.0, and 2.0 inches. This option allows the user greater flexibility when installing the connector.

Solder Cup - For applications that require the lowest contact resistance, Cinch offers Dura-Con connectors with solder cups for termination by the user.

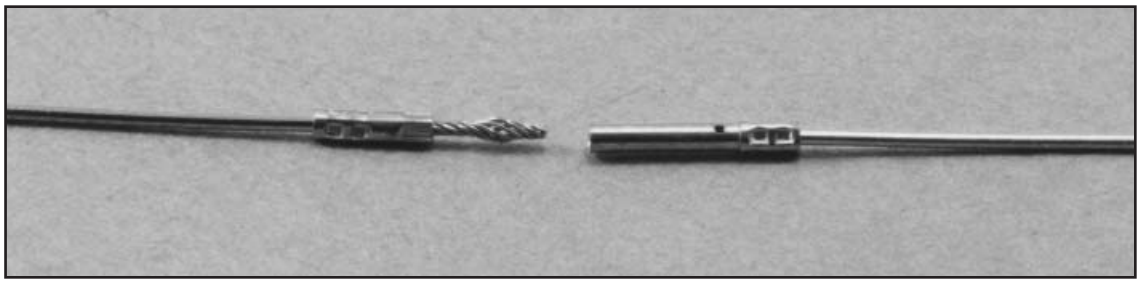

Dura-Con is a trademark of Cinch Connectors.

Custom Capabilities:

Standard Cinch Dura-Con connectors satisfy a wide variety of applications. Cinch's line of Dura-Con D-microminiature connectors is one of the most versatile in the industry. There are over 50,000 possible combinations of Cinch standard options such as connector type, size, materials, hardware, and termination.

When special application requirements arise, Cinch Dura-Con connectors take this versatility to the next level. Whether specific needs entail new variations of simple end-to-end connector assemblies or more complex and intricate harness assemblies, Cinch Connector Division has the state-of-the-art engineering resources and research facilities in place to meet your needs. Cinch approaches your business with a well-defined goal: to ensure the integrity of your design and to execute our contribution to it in a responsible, cost-effective manner. This philosophy has led Cinch to a position of industry leadership.

For complete information regarding the total capabilities of the Dura-Con connector series, or for custom application assistance, contact your nearest Cinch Connectors sales office.

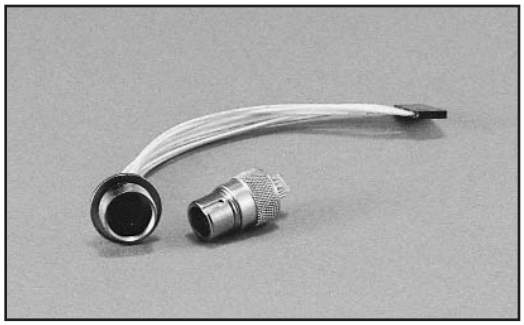

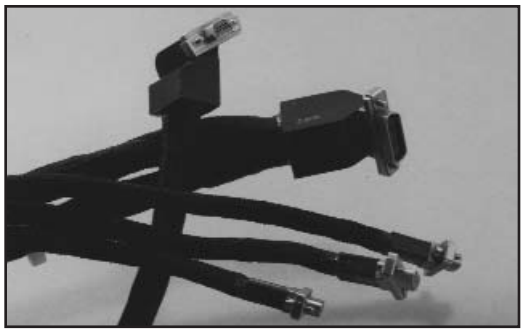

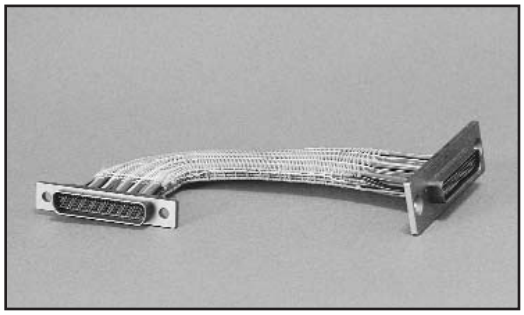

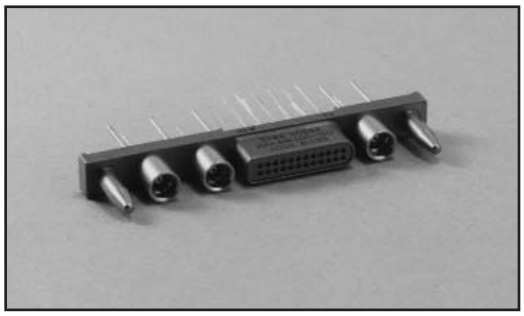

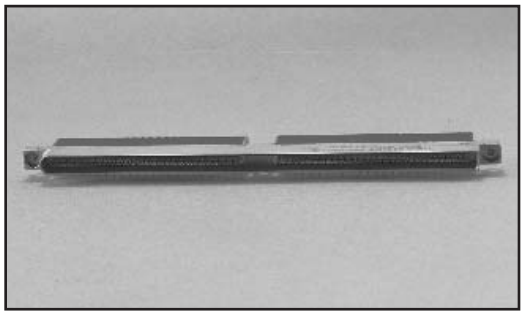

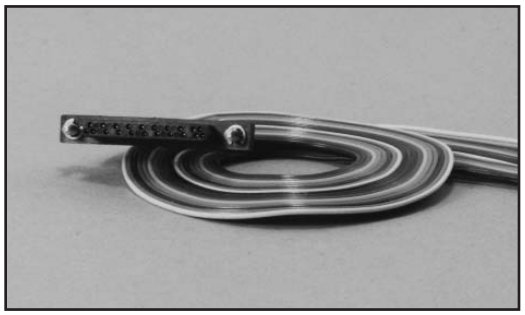

Dura-Con High Reliability All-Plastic

.050" (1.27mm) Density
Solder Cup/Wire
D-Microminiature

Cinch

Features

- ***Both plug and socket available in 9, 15, 21, 25, 31, 37, and 51 positions.***
- ***Termination styles - solder cup, gold-plated solid wire, and insulated stranded wire.***
- ***Several styles of mounting hardware are available for cable-to-cable, cable-to-board mount, and cable-to-panel mount applications.***
- ***High-performance Dura-Con twist-pin contact.***
- ***Economical all-plastic shell for lightweight applications where no shielding is required.***
- ***Meets requirements of MIL-C-83513 except where noted.***

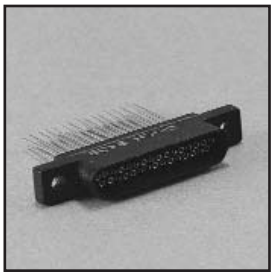

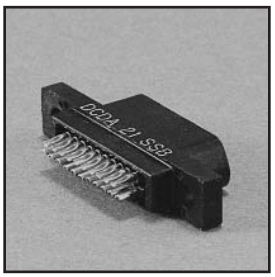

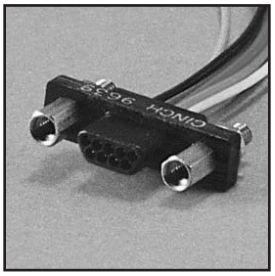

Materials

Insulator: UL94V-0 rated glass-filled polyester

Contacts: Pins - Copper alloy, Sockets - Copper alloy (machined)

Contact Plating: .000050 in gold

Environmental

Operating Temperature: -55° C to +135° C

Electrical

Current Rating: 3 Amps maximum

Withstanding Voltage: 600 VAC RMS @ sea level

Contact Resistance: 8 milliohms maximum change

Mechanical

Individual Contact: 6 oz. (170.40 g) maximum insertion;
0.5 oz. (14.20 g) minimum withdrawal

Mating / Unmating Force: See table

No. of Contacts	Maximum Mating Force Lb.	Maximum Mating Force Kg	Minimum Unmating Force Lb.	Minimum Unmating Force Kg
9	5.63	2.56	.28	.13
15	9.38	4.26	.47	.21
21	13.13	5.96	.66	.30
25	15.63	7.10	.78	.35
31	19.38	8.80	.97	.44
37	23.13	10.50	1.16	.53
51	31.88	14.47	1.59	.72

Contact Arrangements

(Face view of pin insulator)
(Use reverse order for socket)

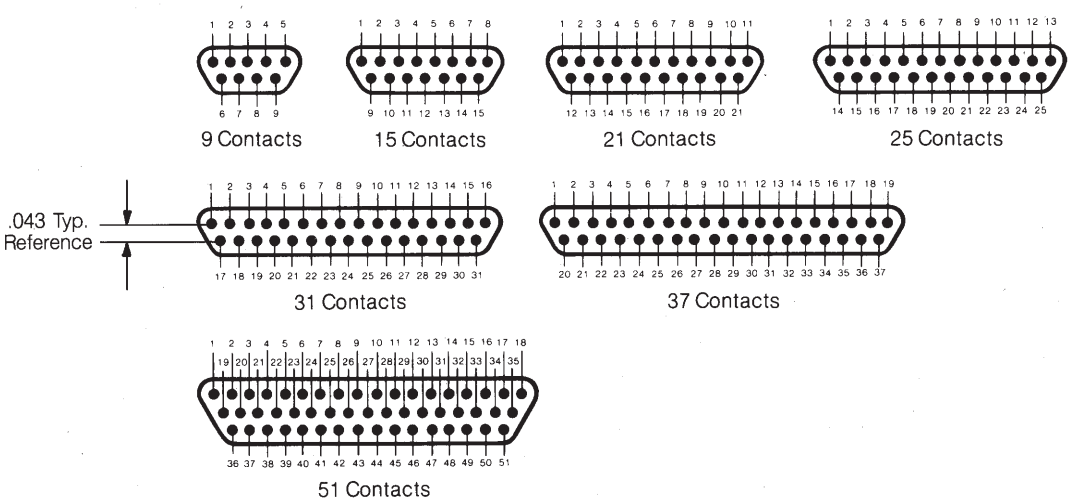

Ordering Information

DC D A 37 P 6 E 2-18.0 K

Cinch Dura-Con D Connector

Insulator Type
***D** = Thermoplastic
Glass Reinforced

Mounting Type
***A** = Screw Mount Flange

No. of Contacts
9, 15, 21, 25, 31, 37, 51

Contact Type
P – Pin (Plug)
S – Socket (Receptacle)

Wire Size in AWG
5 = 25 AWG Solid Copper
6 = 26 AWG Stranded
S = Solder Cup (Skip to Mounting Hardware)

Wire Type
E = MIL-W-16878/4, 7 Strand
C = Solid Copper - Uninsulated

(Consult factory for non-standard wire types)

Mounting Hardware**
B = No Hardware
F = Float Mount
R = Reverse Float Mount
K = Jackscrew (Standard)
L = Jackscrew (Low Profile)
P = Jackpost, MIL-C-83513/5-07

Lead Length in inches***
00.5 Solid copper wire only
01.0 Solid copper wire only
02.0 Solid copper wire only
18.0 Stranded wire only
24.0 Stranded wire only
36.0 Stranded wire only
48.0 Stranded wire only

Insulation
Color or Wire Finish
1 = White
***2** = Yellow (Stranded Wire)
3 = Tin-Plated
***4** = Gold-Plated (Solid Wire Only)
***5** = Color Coded Per MIL-Std. (681)
System 1. (Stranded Wire Only)

***** - Indicates Cinch std. option.
******- See p. 5-12 for std. hardware dims. See p. 5-13 for non-std. hardware & p. 5-31 for Mil spec. hardware both sold separately.
*******- Length Tolerance: solid wire = ± 3/32", standard wire = ± 1/4".

Connector Dimensions - Plastic Shell

Plug

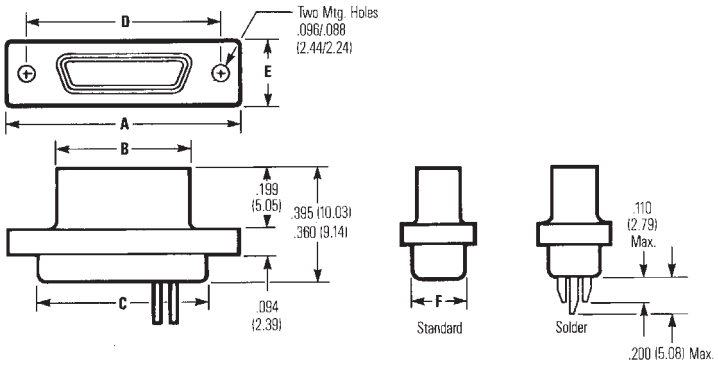

Socket

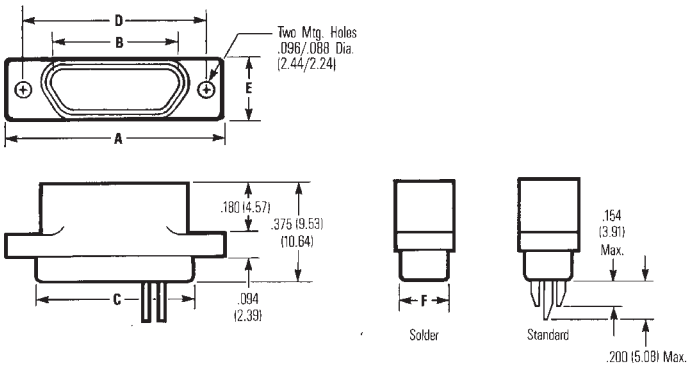

5

No. of Contacts	A ± .010 (.254) in	A mm	B Max. in	B Max. mm	C +.010 (.254) -.018 (.457) in	C mm	D ±.005 (.127) in	D mm	E ±.010 (.254) in	E mm	F Max. in	F Max. mm
9 Plug	.778	19.76	.292	7.42	.398	10.11	.565	14.35	.208	5.28	.173	4.39
9 Socket	.778	19.76	.376	9.55	.398	10.11	.565	14.35	.208	5.28	.173	4.39
15 Plug	.928	23.57	.442	11.23	.548	13.92	.715	18.16	.208	5.28	.173	4.39
15 Socket	.928	23.57	.526	13.36	.548	13.92	.715	18.16	.208	5.28	.173	4.39
21 Plug	1.078	27.38	.592	15.04	.698	17.73	.865	21.97	.208	5.28	.173	4.39
21 Socket	1.078	27.38	.676	17.17	.698	17.73	.865	21.97	.208	5.28	.173	4.39
25 Plug	1.178	29.92	.692	17.58	.798	20.27	.965	24.51	.208	5.28	.173	4.39
25 Socket	1.178	29.92	.776	19.71	.798	20.27	.965	24.51	.208	5.28	.173	4.39
31 Plug	1.328	33.73	.842	21.39	.948	24.08	1.115	28.32	.208	5.28	.173	4.39
31 Socket	1.328	33.73	.926	23.52	.948	24.08	1.115	28.32	.208	5.28	.173	4.39
37 Plug	1.478	37.54	.992	25.20	1.098	27.89	1.265*	32.13	.208	5.28	.173	4.39
37 Socket	1.478	37.54	1.076	27.33	1.098	27.89	1.265*	32.13	.208	5.28	.173	4.39
51 Plug	1.428	36.27	.942	23.93	1.048	26.62	1.215	30.86	.250	6.35	.220	5.59
51 Socket	1.428	36.27	1.026	26.06	1.048	26.62	1.215	30.86	.250	6.35	.220	5.59

Panel Mounting Dimensions

Pin and socket, rear mounted

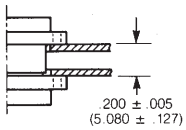

Pin and socket, front mounted

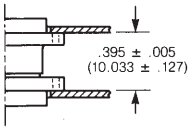

Pin, front mounted
Socket, rear mounted

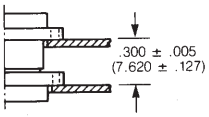

Panel Cutout Dimensions

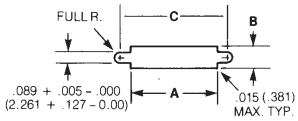

Figure 1. Front Mounting

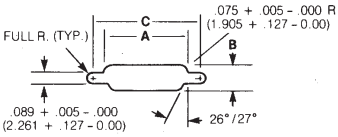

Figure 2. Rear Mounting

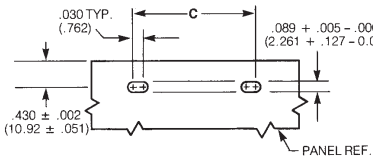

Figure 3. Edgeboard Mounting

No. of Contacts	Figure Number	A +.004 -.000 in	A (.101) (.000) mm	B +.004 -.000 in	B (.101) (.000) mm	C +.005 -.000 in	C (.127) (.000) mm
9	1	.408	10.36	.172	4.37	.570	14.48
	2	.373	9.47	.216	5.49	.570	14.48
	3	-	-	-	-	.570	14.48
15	1	.558	14.17	.172	4.37	.720	18.29
	2	.523	13.28	.216	5.49	.720	18.29
	3	-	-	-	-	.720	18.29
21	1	.708	17.98	.172	4.37	.870	22.10
	2	.674	17.12	.216	5.49	.870	22.10
	3	-	-	-	-	.870	22.10
25	1	.808	20.52	.172	4.37	.970	24.64
	2	.774	19.66	.216	5.49	.970	24.64
	3	-	-	-	-	.970	24.64
31	1	.958	24.33	.172	4.37	1.120	28.45
	2	.924	23.47	.216	5.49	1.120	28.45
	3	-	-	-	-	1.120	28.45
37	1	1.108	28.14	.172	4.37	1.270	32.26
	2	1.074	27.28	.216	5.49	1.270	32.26
	3	-	-	-	-	1.270	32.26
51	1	1.058	26.87	.215	5.46	1.220	30.99
	2	1.024	26.01	.259	6.58	1.220	30.99
	3	-	-	-	-	1.220	30.99

Dura-Con High Reliability Metal Shell

.050" (1.27mm) Density
Solder Cup/Wire
D-Microminiature

Cinch

Features

- ***Both plug and socket available in 9, 15, 21, 25, 31, 37, 51, and 100 positions.***
- ***Several styles of mounting are available for cable-to-cable, cable-to-panel mount, and cable-to-board mount.***
- ***Aluminum shell provides extra strength and EMI/RFI shielding capability. Plating options available.***
- ***Silicone elastomer compression interfacial seal protects contacts from moisture and humidity and isolates contacts from each other and the metal shell.***
- ***Meets requirements of MIL-C-83513 except where noted.***
- ***Rugged twist-pin contacts resistant to shock and vibration make metal shell Dura-Con an excellent choice for harsh environments such as airborne or space applications.***

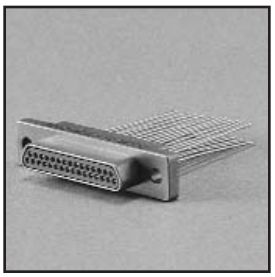

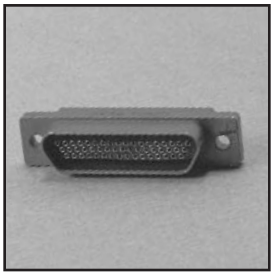

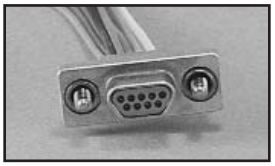

Materials

Insulator: UL94V-0 rated glass-filled polyester or diallyl phthalate
Contacts: Pins - Copper alloy, Sockets - Copper alloy (machined)
Contact Plating: .000050 in gold
Shell: Aluminum alloy
Shell Plating: Yellow chromate over cadmium (std.) or electroless nickel

Environmental

Operating Temperature: -55°C to +135°C

Electrical

Current Rating: 3 Amps maximum
Withstanding Voltage: 600 VAC RMS @ sea level
Contact Resistance: 8 milliohms maximum

Mechanical

Individual Contact: 6 oz. (170.40 g) maximum insertion; 0.5 oz. (14.20 g) minimum withdrawal
Mating / Unmating Force: See table

No. of Contacts	Maximum Mating Force Lb.	Maximum Mating Force Kg	Minimum Unmating Force Lb.	Minimum Unmating Force Kg
9	5.63	2.56	.28	.13
15	9.38	4.26	.47	.21
21	13.13	5.96	.66	.30
25	15.63	7.10	.78	.35
31	19.38	8.80	.97	.44
37	23.13	10.50	1.16	.53
51	31.88	14.47	1.59	.72
100	62.50	28.38	3.13	1.42

Contact Arrangements

(Face view of pin insert)
(Use reverse order for socket side)

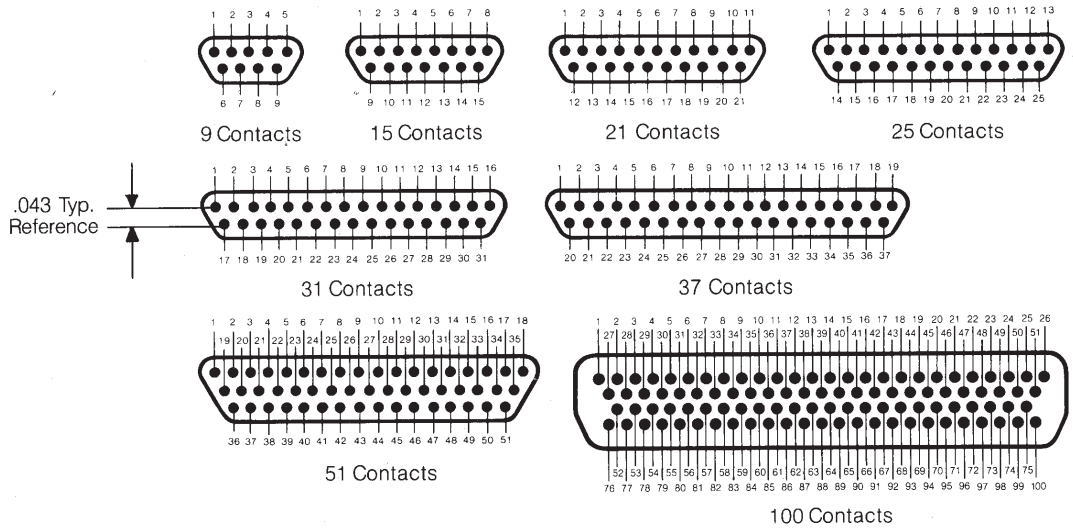

Ordering Information

DC D M 37 P 6 E 2-18.0 K N

Cinch Dura-Con D Connector

Insulator Type
C = Diallyl Phthalate Glass-Reinforced
D = Thermoplastic Glass-Reinforced

Mounting Type
M = Screw Mount Metal Shell

No. of Contacts
9, 15, 21, 25, 31, 37, 51, 100

Contact Type
P = Pin (Plug)
S = Socket (Receptacle)

Wire Size in AWG
5 = 25 AWG Solid Copper
6 = 26 AWG Stranded
S = Solder cup
(Skip to Mounting Hardware)

Wire Type
C = Solid Copper (Uninsulated)
E = MIL-W-16878/4, 7 Strand

(Consult factory for non-standard wire types)

Shell Plating
***No Letter** = Yellow Chromate over Cadmium
N = Electroless Nickel

Mounting Hardware**
B = No Hardware
F = Float Mount
R = Reverse Float Mount
K = Jackscrew (Standard)
L = Jackscrew (Low Profile)
P = Jackpost, Size 9 through 51 MIL-C-83513/5-07
Size 100 MIL-C-83513/5-17

Lead Length in inches***
00.5 Solid copper wire only
01.0 Solid copper wire only
02.0 Solid copper wire only
18.0 Stranded wire only
24.0 Stranded wire only
36.0 Stranded wire only
48.0 Stranded wire only

Insulation Color or Wire Finish
1 = White
***2** = Yellow (Stranded Wire)
3 = Tin-Plated
***4** = Gold-Plated (Solid Wire)
***5** = Color Coded Per MIL-Std. 681, System 1. (Stranded Wire Only)

***** - Indicates Cinch std. option.
******- See p. 5-12 for std. hardware dims. See p. 5-13 for non-std. hardware & p. 5-31 for Mil spec. hardware both sold separately.
*******- Length Tolerance: solid wire = ± 3/32", standard wire = ± 1/4".

Connector Dimensions - Metal Shell

Plug

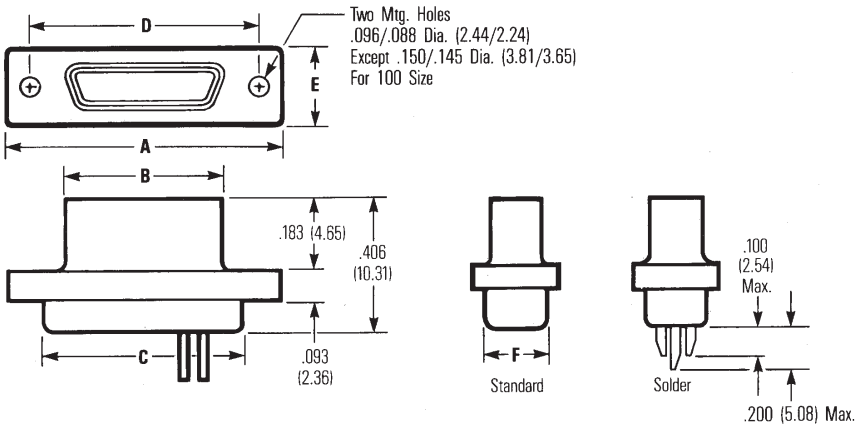

Socket

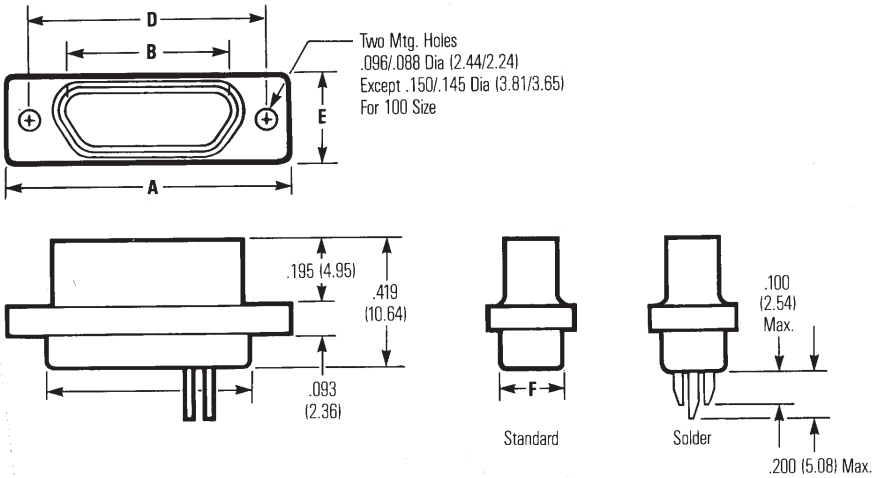

No. of Contacts	A ± .010 (.254) in	A ± .010 (.254) mm	B Max. in	B Max. mm	C +.010 (.254) -.018 (.457) in	C +.010 (.254) -.018 (.457) mm	D ± .005 (.127) in	D ± .005 (.127) mm	E ± .010 (.254) in	E ± .010 (.254) mm	F Max. in	F Max. mm
9 Plug	.775	19.68	.333	8.46	.390	9.91	.565	14.35	.298	7.57	.270	6.86
9 Socket	.775	19.68	.396	10.06	.390	9.91	.565	14.35	.298	7.57	.270	6.86
15 Plug	.925	23.50	.483	12.27	.540	13.72	.715	18.16	.298	7.57	.270	6.86
15 Socket	.925	23.50	.546	13.87	.540	13.72	.715	18.16	.298	7.57	.270	6.86
21 Plug	1.075	27.30	.633	16.08	.690	17.53	.865	21.97	.298	7.57	.270	6.86
21 Socket	1.075	27.30	.696	17.68	.690	17.53	.865	21.97	.298	7.57	.270	6.86
25 Plug	1.175	29.84	.733	18.62	.790	20.07	.965	24.51	.298	7.57	.270	6.86
25 Socket	1.175	29.84	.796	20.22	.790	20.07	.965	24.51	.298	7.57	.270	6.86
31 Plug	1.325	33.66	.883	21.16	.940	23.88	1.115	28.32	.298	7.57	.270	6.86
31 Socket	1.325	33.66	.946	24.03	.940	23.88	1.115	28.32	.298	7.57	.270	6.86
37 Plug	1.475	37.46	1.033	26.24	1.090	27.69	1.265	32.13	.298	7.57	.270	6.86
37 Socket	1.475	37.46	1.096	27.84	1.090	27.69	1.265	32.13	.298	7.57	.270	6.86
51 Plug	1.425	36.20	.983	24.97	1.040	26.42	1.215	30.86	.341	8.66	.310	7.87
51 Socket	1.425	36.20	1.046	26.57	1.040	26.42	1.215	30.86	.341	8.66	.310	7.87
100 Plug	2.160	54.86	1.383	35.13	1.432	36.38	1.800	45.71	.384	9.75	.360	9.15
100 Socket	2.160	54.86	1.446	36.73	1.432	36.38	1.800	45.71	.384	9.75	.360	9.15

Panel Mounting Dimensions

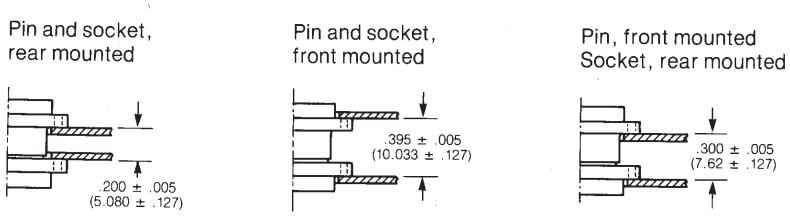

Panel Cutout Dimensions

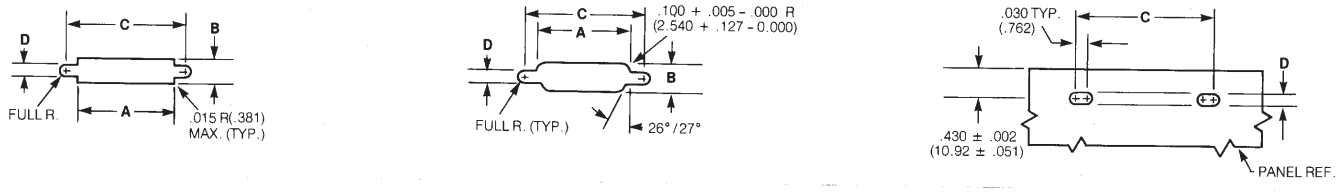

No. of Contacts	Figure Number	A +.004 -.000 in	A (.101) (.000) mm	B +.004 -.000 in	B (.101) (.000) mm	C +.005 -.000 in	C (.127) (.000) mm	D +.005 -.000 in	D (1.27) (.000) mm
9	1	.408	10.36	.270	6.86	.570	14.48	-	-
	2	.408	10.36	.256	6.50	.570	14.48	.089	2.26
	3	-	-	-	-	.570	14.48	-	-
15	1	.558	14.17	.270	6.86	.720	18.29	-	-
	2	.558	14.17	.256	6.50	.720	18.29	.089	2.26
	3	-	-	-	-	.720	18.29	-	-
21	1	.708	17.98	.270	6.86	.870	22.10	-	-
	2	.708	17.98	.256	6.50	.870	22.10	.089	2.26
	3	-	-	-	-	.870	22.10	-	-
25	1	.808	20.52	.270	6.86	.970	24.64	-	-
	2	.808	20.52	.256	6.50	.970	24.64	.089	2.26
	3	-	-	-	-	.970	24.64	-	-
31	1	.958	24.33	.270	6.86	1.120	28.45	-	-
	2	.958	24.33	.256	6.50	1.120	28.45	.089	2.26
	3	-	-	-	-	1.120	28.45	-	-
37	1	1.108	28.14	.270	6.86	1.270	32.26	-	-
	2	1.108	28.14	.256	6.50	1.270	32.26	.089	2.26
	3	-	-	-	-	1.270	32.26	-	-
51	1	1.058	26.87	.315	8.00	1.220	30.99	-	-
	2	1.058	26.87	.300	7.62	1.220	30.99	.089	2.26
	3	-	-	-	-	1.220	30.99	-	-
100	1	1.450	36.84	.361	9.17	1.805	45.86	.117	2.97
	2	1.562	39.68	.338	8.58	1.805	45.86	.117	2.97
	3	-	-	-	-	1.805	45.86	.117	2.97

Mounting Hardware
For Plastic & Metal Shell
Dura-Con Connectors

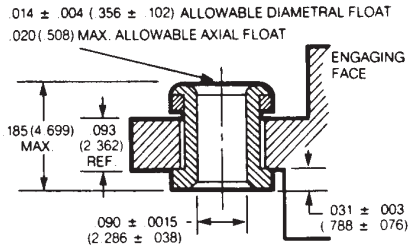

Float Mounting

Option "F"

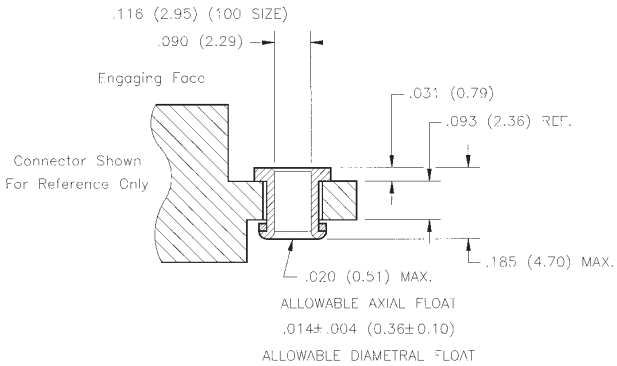

Reversed Float Mounting

Option "R"

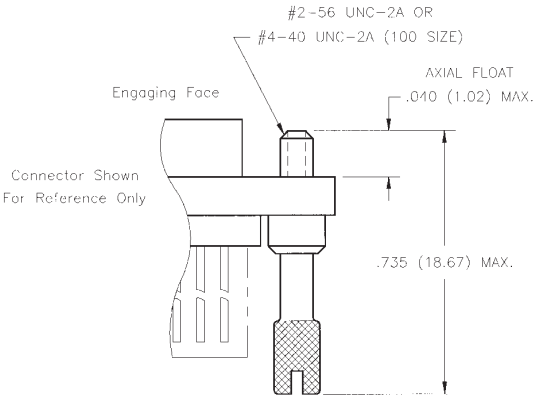

Standard Jackscrew

Option "K"

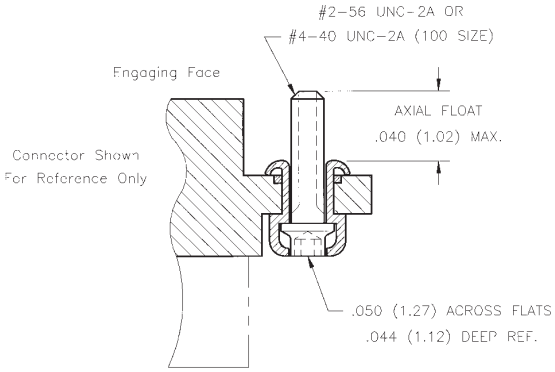

Low Profile Jackscrew

Option "L"

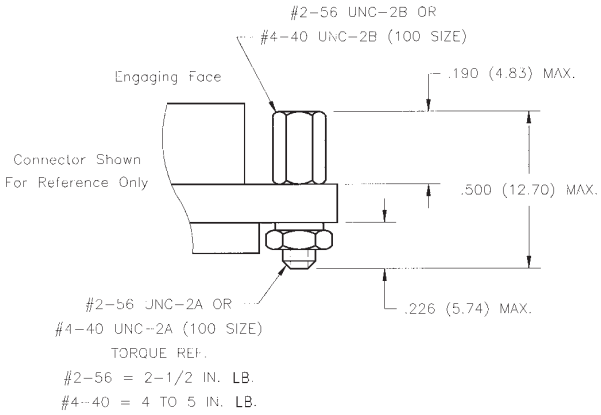

Removable Jackpost

Option "P"

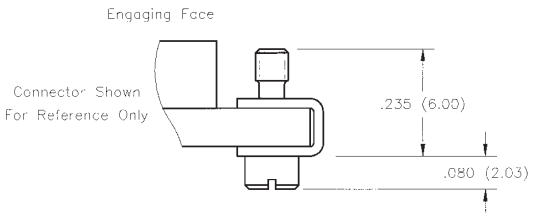

Screwlock Kit

P/N: DCSL1
Purchased Separately

Jackpost - Rear Panel Mount
(Purchased Separately)

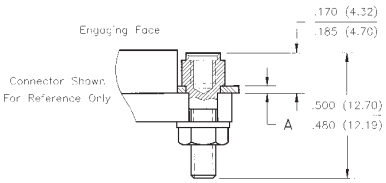

Jackpost Bushing
(for rear panel mounting)

Jackpost Part Number	Panel Thickness in	Panel Thickness mm	A Dimension in	A Dimension mm
DCJPRM094	.094	2.5	.092/.087	2.34/2.21
DCJPRM063	.063	1.6	.061/.056	1.55/1.42
DCJPRM047	.047	1.2	.047/.042	1.19/1.07
DCJPRM031	.031	0.8	.030/.025	0.76/0.64

Panel Cutout Dimensions
(Plug & Receptacle)

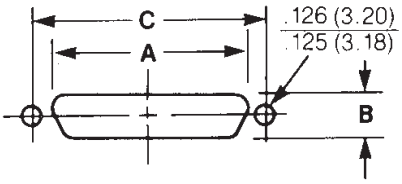

Part Number (by Shell Size)	A +.004 (.101) -.000 (.000) in	A mm	B +.004 (.101) -.000 (.000) in	B mm	C ±.005 (.127) in	C mm
9	.398	10.11	.249	6.32	.565	14.35
15	.548	13.92	.249	6.32	.715	18.16
21	.698	17.73	.249	6.32	.865	21.97
25	.798	20.27	.249	6.32	.965	24.51
31	.948	24.08	.249	6.32	1.115	28.34
37	1.098	27.89	.249	6.32	1.265	32.13
51	1.048	26.62	.292	7.42	1.215	30.86
100	1.448	36.78	.336	8.53	1.800	45.72

Dura-Con High Reliability Metal Shell

.050" (1.27mm) Density
PCB Mount Terminal Block

Cinch

Features

- *Plug & socket versions available in 9, 15, 21, 25, 31, 37, 51, and 100 positions.*
- *Flow-through design facilitates inspection and cleaning after soldering.*
- *All terminal block connectors use standard mounting hardware.*
- *Metal shell provides EMI/RFI shielding capability.*
- *Available in 3 styles: Straight mount, 90° right-angle mount, and 90° right-angle narrow profile mounting.*
- *Silicone elastomer interfacial seal protects contacts from moisture and isolates them from each other and from the metal shell.*
- *Meets requirements of MIL-C-83513.*
- *Choice of insulator materials.*

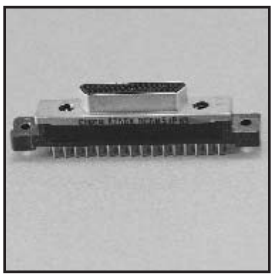

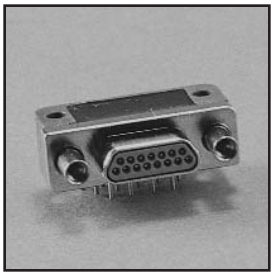

Materials

Insulator: UL94V-0 glass-filled polyester or diallyl phthalate

Contacts: Pins - Copper alloy, Sockets - Copper alloy (machined)

Contact Plating: .000050 in gold

Shell: Aluminum alloy

Shell Plating: Yellow chromate over cadmium (std.) or electroless nickel

Environmental

Operating Temperature: -55°C to +135°C

Electrical

Current Rating: 3 Amps maximum

Withstanding Voltage: 600 VAC RMS @ sea level, 150 VAC @ 70,000 ft.

Contact Resistance: 8 milliohms maximum

Insulation Resistance: 1,000 megohms min between adjacent pins

Mechanical

Individual Contact: 6 oz. (170.40 g) maximum insertion force; 0.5 oz. (14.20 g) minimum withdrawal force

Mating / Unmating Forces: See table

No. of Contacts	Maximum Mating Force Lb.	Maximum Mating Force Kg	Minimum Unmating Force Lb.	Minimum Unmating Force Kg
9	5.63	2.56	.28	.13
15	9.38	4.26	.47	.21
21	13.13	5.96	.66	.30
25	15.63	7.10	.78	.35
31	19.38	8.80	.97	.44
37	23.13	10.50	1.16	.53
51	31.88	14.47	1.59	.72
100	62.50	28.38	3.13	1.42

Contact Arrangements

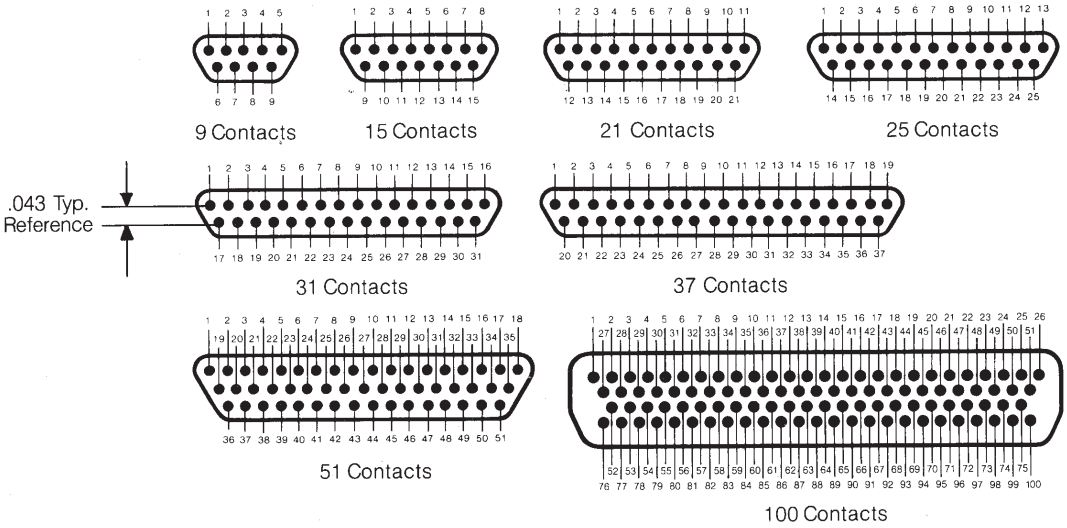

Ordering Information

DC D M 25 S BR -- --

Cinch Dura-Con D Connector

Insulator Type
C = Diallyl Phthalate Glass Reinforced
D = Thermoplastic Glass Reinforced

Mounting Type
M = Screw Mount Metal Shell

No. of Contacts
9, 15, 21, 25, 31, 37, 51, & 100

Contact Type
P = Pin (Plug)
S = Socket (Receptacle)

Shell Finish*
No Letter = Standard Yellow Chromate over Cadmium
N = Electroless Nickel

Hardware*
No Letter = Less Hardware
P = Jackpost

Termination Style
BR = 90° PCB
BS = Straight 180° PCB
CBR = 90° Narrow Profile PCB

* For other options consult factory.

90° Termination

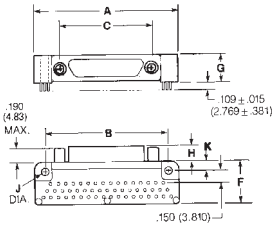

Recommended Board Layout

(As Viewed from Bottom of Terminal Block)

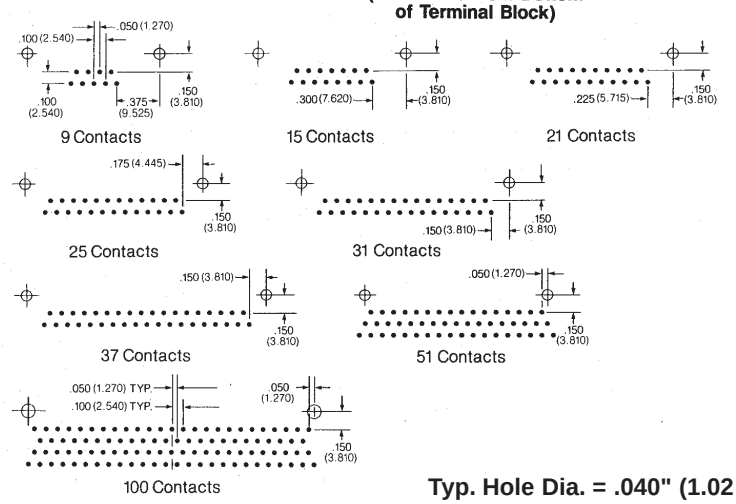

Typ. Hole Dia. = .040" (1.02 mm)

NOTE: For additional connector dimensions, see page 5-10.

No. of Contacts	A Max. in	A Max. mm	B ± .007 (0.18) in	B ± .007 (0.18) mm	C ± .005 (0.13) in	C ± .005 (0.13) mm	F Max. in	F Max. mm
9 Plug	1.390	35.31	1.150	29.21	.565	14.35	.465	11.81
9 Socket	1.390	35.31	1.150	29.21	.565	14.35	.465	11.81
15 Plug	1.540	39.12	1.300	33.02	.715	18.16	.465	11.81
15 Socket	1.540	39.12	1.300	33.02	.715	18.16	.465	11.81
21 Plug	1.690	42.93	1.450	36.83	.865	21.97	.465	11.81
21 Socket	1.690	42.93	1.450	36.83	.865	21.97	.465	11.81
25 Plug	1.790	45.47	1.550	39.37	.965	24.51	.465	11.81
25 Socket	1.790	45.47	1.550	39.37	.965	24.51	.465	11.81
31 Plug	2.040	51.82	1.800	45.72	1.115	28.32	.465	11.81
31 Socket	2.040	51.82	1.800	45.72	1.115	28.32	.465	11.81
37 Plug	2.340	59.44	2.100	53.34	1.265	32.13	.465	11.81
37 Socket	2.340	59.44	2.100	53.34	1.265	32.13	.465	11.81
51 Plug	1.875	47.63	1.600	40.64	1.215	30.86	.565	14.35
51 Socket	1.875	47.63	1.600	40.64	1.215	30.86	.565	14.35
100 Plug	2.780	70.61	2.500	63.50	1.800	45.72	.765	19.43
100 Socket	2.780	70.61	2.500	63.50	1.800	45.72	.765	19.43

No. of Contacts	G Max. in	G Max. mm	H Max. in	H Max. mm	J ± .005 (0.13) in	J ± .005 (0.13) mm	K ± .015 in	K ± .015 mm
9 Plug	.308	7.82	.190	4.83	.096	2.44	.125	3.18
9 Socket	.308	7.82	.200	5.08	.096	2.44	.125	3.18
15 Plug	.308	7.82	.190	4.83	.096	2.44	.125	3.18
15 Socket	.308	7.82	.200	5.08	.096	2.44	.125	3.18
21 Plug	.308	7.82	.190	4.83	.096	2.44	.125	3.18
21 Socket	.308	7.82	.200	5.08	.096	2.44	.125	3.18
25 Plug	.308	7.82	.190	4.83	.096	2.44	.125	3.18
25 Socket	.308	7.82	.200	5.08	.096	2.44	.125	3.18
31 Plug	.308	7.82	.190	4.83	.096	2.44	.125	3.18
31 Socket	.308	7.82	.200	5.08	.096	2.44	.125	3.18
37 Plug	.308	7.82	.190	4.83	.096	2.44	.125	3.18
37 Socket	.308	7.82	.200	5.08	.096	2.44	.125	3.18
51 Plug	.351	8.92	.190	4.83	.096	2.44	.125	3.18
51 Socket	.351	8.92	.200	5.08	.096	2.44	.125	3.18
100 Plug	.394	10.00	.190	4.83	.125	3.18	.225	5.72
100 Socket	.394	10.00	.200	5.08	.125	3.18	.225	5.72

Straight (180°) Termination

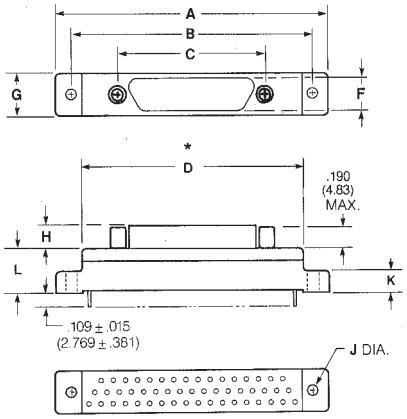

Recommended Board Layout

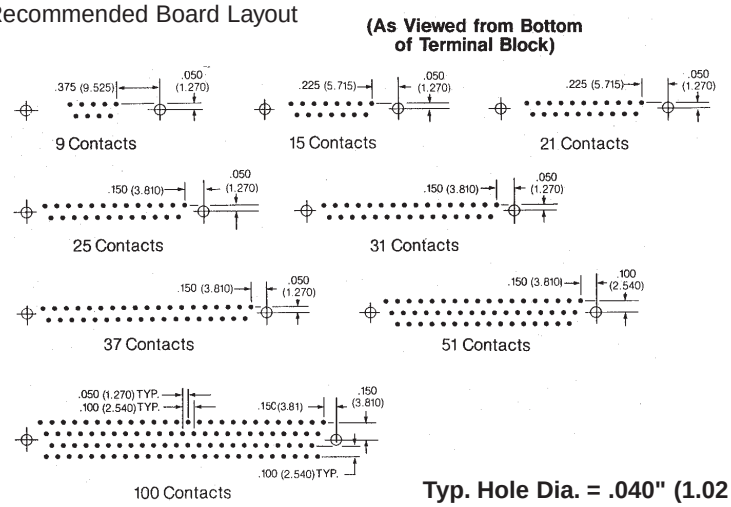

Typ. Hole Dia. = .040" (1.02 mm)

NOTE: For additional connector dimensions, see page 5-10.

No. of	A Max.		B ± .007 (0.18)		C ± .005 (0.13)		D Max.		G Max.	
Contacts	in	mm	in	mm	in	mm	in	mm	in	mm
9 Plug	1.390	35.31	1.150	29.21	.565	14.35	.885	22.48	.308	7.75
9 Socket	1.390	35.31	1.150	29.21	.565	14.35	.885	22.48	.308	7.75
15 Plug	1.390	35.31	1.150	29.21	.715	18.16	.945	24.0	.308	7.75
15 Socket	1.390	35.31	1.150	29.21	.715	18.16	.945	24.0	.308	7.75
21 Plug	1.690	42.93	1.450	36.83	.865	21.97	1.185	30.09	.308	7.75
21 Socket	1.690	42.93	1.450	36.83	.865	21.97	1.185	30.09	.308	7.75
25 Plug	1.740	44.20	1.500	38.10	.965	24.51	1.275	32.38	.308	7.75
25 Socket	1.740	44.20	1.500	38.10	.965	24.51	1.275	32.38	.308	7.75
31 Plug	2.040	51.82	1.800	45.72	1.115	28.32	1.575	40.00	.308	7.75
31 Socket	2.040	51.82	1.800	45.72	1.115	28.32	1.576	40.00	.308	7.75
37 Plug	2.340	59.44	2.100	53.34	1.265	32.13	1.875	47.62	.308	7.75
37 Socket	2.340	59.44	2.100	53.34	1.265	32.13	1.875	47.62	.308	7.75
51 Plug	2.270	57.66	2.000	50.80	1.215	30.86	1.775	45.08	.351	8.92
51 Socket	2.270	57.66	2.000	50.80	1.215	30.86	1.775	45.08	.351	8.92
100 Plug	3.070	77.98	2.800	71.12	1.800	45.72	2.585	65.55	.455	11.56
100 Socket	3.070	77.98	2.800	71.12	1.800	45.72	2.585	65.65	.455	11.56

No. of	H Max.		J ± .005 (0.13)		K Max.		L Max.	
Contacts	in	mm	in	mm	in	mm	in	mm
9 Plug	.190	4.83	.096	2.44	.165	4.19	.355	9.02
9 Socket	.200	5.08	.096	2.44	.165	4.19	.355	9.02
15 Plug	.190	4.83	.096	2.44	.165	4.19	.355	9.02
15 Socket	.200	5.08	.096	2.44	.165	4.19	.355	9.02
21 Plug	.190	4.83	.096	2.44	.165	4.19	.355	9.02
21 Socket	.200	5.08	.096	2.44	.165	4.19	.355	9.02
25 Plug	.190	4.83	.096	2.44	.165	4.19	.355	9.02
25 Socket	.200	5.08	.096	2.44	.165	4.19	.355	9.02
31 Plug	.190	4.83	.096	2.44	.165	4.19	.355	9.02
31 Socket	.200	5.08	.096	2.44	.165	4.19	.355	9.02
37 Plug	.190	4.83	.096	2.44	.165	4.19	.355	9.02
37 Socket	.200	5.08	.096	2.44	.165	4.19	.355	9.02
51 Plug	.190	4.83	.096	2.44	.165	4.19	.355	9.02
51 Socket	.200	5.08	.096	2.44	.165	4.19	.355	9.02
100 Plug	.190	4.83	.125	3.18	.300	7.62	.550	13.97
100 Socket	.200	5.08	.125	3.18	.300	7.62	.550	13.97

90° Narrow Termination

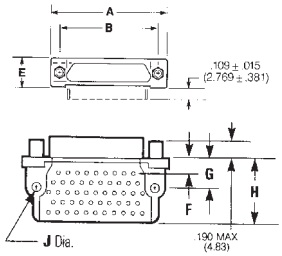

Recommended Board Layout

(As Viewed from Bottom of Terminal Block)

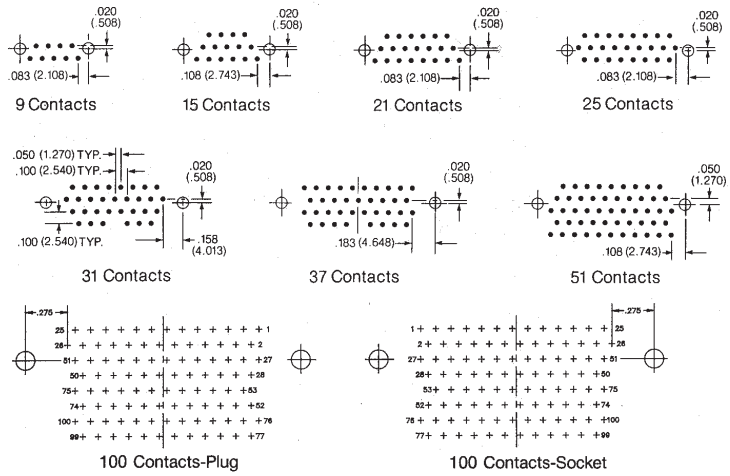

NOTE: For additional connector dimensions, see page 5-10.

Typ. Hole Dia. = .040" (1.02 mm)

No. of Contacts	A Max. in	A Max. mm	B ± .005 (0.13) in	B ± .005 (0.13) mm	C Max. in	C Max. mm
9 Plug	.785	19.94	.565	14.35	.308	7.82
9 Socket	.785	19.94	.565	14.35	.308	7.82
15 Plug	.935	23.75	.715	18.16	.308	7.82
15 Socket	.935	23.75	.715	18.16	.308	7.82
21 Plug	1.085	27.56	.865	21.97	.308	7.82
21 Socket	1.085	27.56	.865	21.97	.308	7.82
25 Plug	1.085	30.10	.965	24.51	.308	7.82
25 Socket	1.185	30.10	.965	24.51	.308	7.82
31 Plug	1.335	33.91	1.115	28.32	.308	7.82
31 Socket	1.335	33.91	1.115	28.32	.308	7.82
37 Plug	1.485	37.72	1.265	32.13	.308	7.82
37 Socket	1.485	37.72	1.265	32.13	.308	7.82
51 Plug	1.435	36.45	1.215	30.86	.351	8.92
51 Socket	1.435	36.45	1.215	30.86	.351	8.92
100 Plug	2.175	55.25	1.800	45.72	.394	10.00
100 Socket	2.175	55.25	1.800	45.72	.394	10.00

No. of Contacts	F ± .010 (0.25) in	F ± .010 (0.25) mm	G ± .010 (0.25) in	G ± .010 (0.25) mm	H Max. in	H Max. mm	J ± .005 (0.13) in	J ± .005 (0.13) mm
9 Plug	.230	5.84	.250	6.35	.420	10.67	.096	2.44
9 Socket	.230	5.84	.250	6.35	.420	10.67	.096	2.44
15 Plug	.130	3.30	.250	6.35	.420	10.67	.096	2.44
15 Socket	.130	3.30	.250	6.35	.420	10.67	.096	2.44
21 Plug	.130	3.30	.250	6.35	.420	10.67	.096	2.44
21 Socket	.130	3.30	.250	6.35	.420	10.67	.096	2.44
25 Plug	.130	3.30	.250	6.35	.420	10.67	.096	2.44
25 Socket	.130	3.30	.250	6.35	.420	10.67	.096	2.44
31 Plug	.130	3.30	.250	6.35	.520	13.21	.996	2.44
31 Socket	.130	3.30	.250	6.35	.520	13.21	.096	2.44
37 Plug	.130	3.30	.250	6.35	.520	13.21	.096	2.44
37 Socket	.130	3.30	.250	6.35	.520	13.21	.096	2.44
51 Plug	.150	3.81	.300	7.62	.650	16.51	.096	2.44
51 Socket	.150	3.81	.300	7.62	.650	16.51	.096	2.44
100 Plug	.200	5.08	.400	10.16	1.000	25.40	.125	3.18
100 Socket	.200	5.08	.400	10.16	1.000	25.40	.125	3.18

Dura-Con High Reliability MIL-C-83513

.050" (1.27mm) Density
Solder Cup/Wire
D-Microminiature

Cinch

Features

- ***All-plastic and metal shell wire versions available in solder cup, gold-plated solid wire, and insulated stranded wire.***
- ***PCB mount "terminal block" type connectors available in straight or right angle.***
- ***Sizes offered - 9, 15, 21, 25, 31, 35, 51, and 100 (metal shell only).***
- ***All products are qualified to the requirements of MIL-C-83513 and marked with the M83513 part number.***
- ***Optional shell platings and insulator materials offer high performance in harsh environments.***
- ***Mounting hardware per MIL-C-83513.***

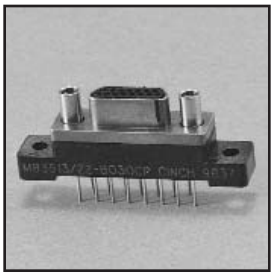

Materials

Insulator: UL94V-0 rated glass-filled polyester per MIL-M-24519 or diallyl phthalate (DAP) per MIL-M-14.

Contacts: Pins - Copper alloy, Sockets - Copper alloy

Contact Plating: .000050 in gold per MIL-G-45204

Shell Material (Metal Shell Only): Aluminum alloy

Shell Plating (Metal Shell Only): Yellow chromate over cadmium (std.) or electroless nickel

Environmental

Operating Temperature: -55°C to +125°C

Electrical

Current Rating: 3 Amps maximum

Withstanding Voltage: 600 VAC RMS @ sea level

Contact Resistance: 8 milliohms maximum

Mechanical

Durability: 500 mate/unmate cycles

Individual Contact: Forces 6 oz. (170.40 g) maximum insertion; 0.5 oz. (14.20 g) minimum withdrawal

Mating / Unmating Force: See table

No. of Contacts	Maximum Mating Force Lb.	Maximum Mating Force Kg	Minimum Unmating Force Lb.	Minimum Unmating Force Kg
9	5.63	2.56	.28	.13
15	9.38	4.26	.47	.21
21	13.13	5.96	.66	.30
25	15.63	7.10	.78	.35
31	19.38	8.80	.97	.44
37	23.13	10.50	1.16	.53
51	31.88	14.47	1.59	.72

Metal Shell

Contact Arrangements

(Face view of pin insert)
(Use reverse order for socket side)

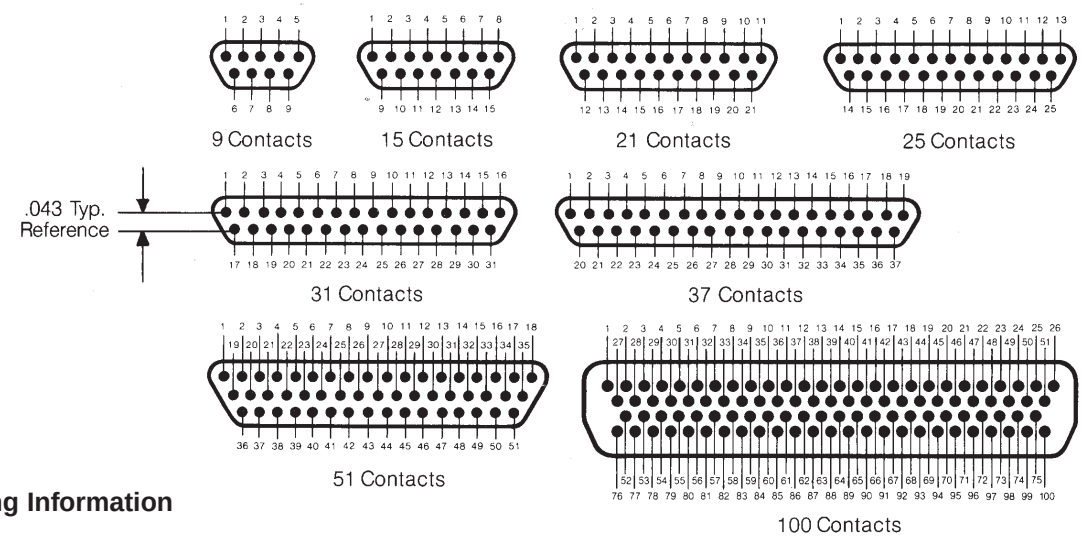

Ordering Information

M83513/04 - A 03 C

Connector Type

01 - Metal Shell D Plugs with Solder Cup Termination

02 - Metal Shell D Sockets with Solder Cup Termination

03 - Metal Shell D Plugs with Wire Leads

04 - Metal Shell D Sockets with Wire Leads

Insert Arrangements
(No. of Contacts)
A = 9
B = 15
C = 21
D = 25
E = 31
F = 37
G = 51
H = 100

Shell Finish
C = Cadmium
N = Electroless Nickel

Wire Type (Use only for /03 & /04, otherwise omit)
01 - M22759/11-26-9, 18 inches, White (see note below)
02 - M22759/11-26-9, 36 inches, White (see note below)
03 - M22759/11-26-( ), 18 inches, Color Coded (see note below)
04 - M22759/11-26-( ), 36 inches, Color Coded (see note below)
05 - QQ-W-343, 25 AWG, 0.5 inch, Gold-Plated
06 - QQ-W-343, 25 AWG, 1.0 inch, Gold-Plated
07 - QQ-W-343, 25 AWG, 0.5 inch, Tin-Plated
08 - QQ-W-343, 25 AWG, 1.0 inch, Tin-Plated
09 - M22759/33-26-9, 18 inches, White
10 - M22759/33-26-9, 36 inches, White
11 - M22759/33-26-( ), 18 inches, Color Coded
12 - M22759/33-26-( ), 36 inches, Color Coded
13 - M22759/11-26-9, 72 inches, White
14 - M22759/11-26-( ), 72 inches, Color Coded
15 - M22759/33-26-9, 72 inches, White
16 - M22759/33-26-( ), 72 inches, Color Coded

Note: See page 5-31 for M83513 mounting hardware.

Connector Dimensions - Metal Shell

Plug

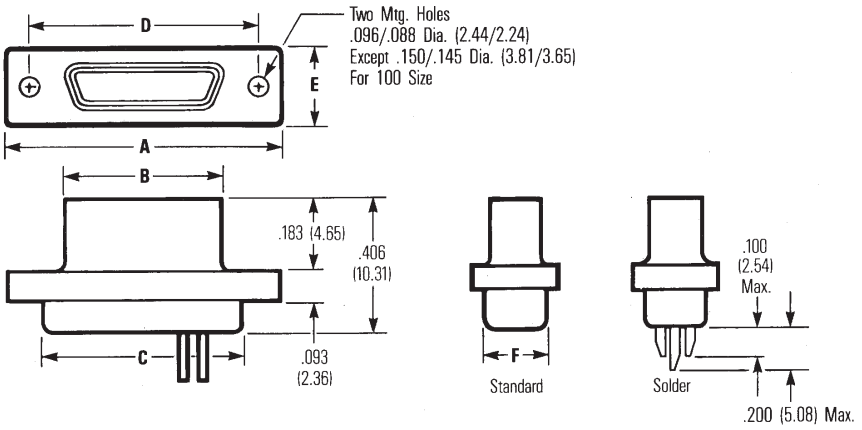

Socket

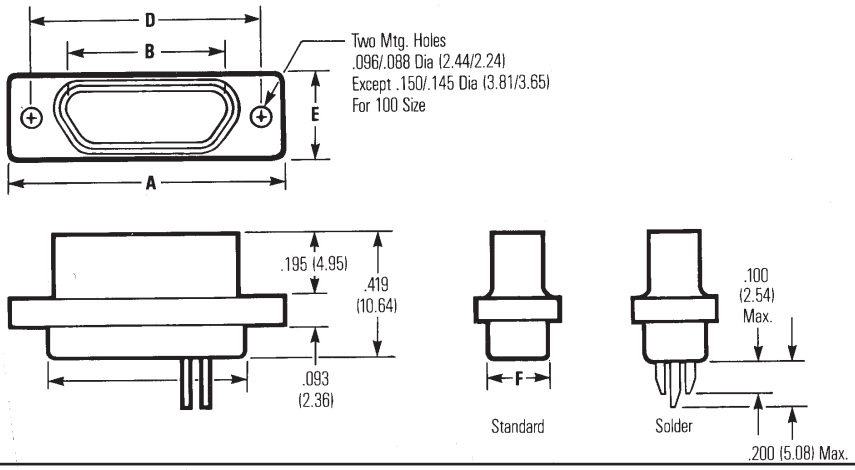

No. of Contacts	A ± .010" (.254) in	A ± .010" (.254) mm	B Max. (Plug) Min. (Socket) in	B Max. (Plug) Min. (Socket) mm	C + .010" (.254) - .018" (.457) in	C + .010" (.254) - .018" (.457) mm	D ± .005" (.127) in	D ± .005" (.127) mm	E ± .010" (.254) in	E ± .010" (.254) mm	F Max. in	F Max. mm
9 Plug	.775	19.68	.3338	8.48	.390	9.91	.565	14.35	.298	7.57	.270	6.68
9 Socket	.775	19.68	.3342	8.49	.390	9.91	.565	14.35	.298	7.57	.270	6.68
15 Plug	.925	23.50	.4838	12.29	.540	13.72	.715	18.16	.298	7.57	.270	6.68
15 Socket	.925	23.50	.4842	12.30	.540	13.72	.715	18.16	.298	7.57	.270	6.68
21 Plug	1.075	27.30	.6338	16.10	.690	17.53	.865	21.97	.298	7.57	.270	6.68
21 Socket	1.075	27.30	.6342	16.11	.690	17.53	.865	21.97	.298	7.57	.270	6.68
25 Plug	1.175	29.84	.7338	18.64	.790	20.07	.965	24.51	.298	7.57	.270	6.68
25 Socket	1.175	29.84	.7342	18.65	.790	20.07	.965	24.51	.298	7.57	.270	6.68
31 Plug	1.325	33.66	.8838	22.45	.940	23.88	1.115	28.32	.298	7.57	.270	6.68
31 Socket	1.325	33.66	.8842	22.46	.940	23.88	1.115	28.32	.298	7.57	.270	6.68
37 Plug	1.475	37.46	1.0338	26.26	1.090	27.69	1.265	32.13	.298	7.57	.270	6.68
37 Socket	1.475	37.46	1.0342	26.27	1.090	27.69	1.265	32.13	.298	7.57	.270	6.68
51 Plug	1.425	36.20	.9838	24.99	1.040	26.42	1.215	30.86	.341	8.66	.310	7.87
51 Socket	1.425	36.20	.9842	25.00	1.040	26.42	1.215	30.86	.341	8.66	.310	7.87
100 Plug	2.160	54.86	1.3838	35.15	1.432	36.38	1.800	45.71	.384	9.75	.360	9.15
100 Socket	2.160	54.86	1.3842	35.16	1.432	36.38	1.800	45.71	.384	9.75	.360	9.15

Panel Mounting Dimensions - Metal Shell

Panel Mounting Dimensions

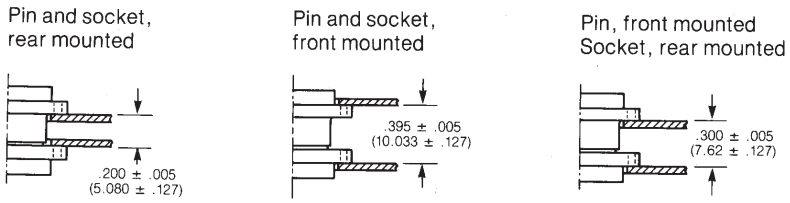

Panel Cutout Dimensions - Metal Shell

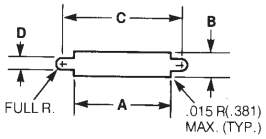

Front Mounting

No. of Contacts	A +.004" (.101mm) -.000" (.000mm) in	A mm	B +.004" (.101mm) -.000" (.000mm) in	B mm	C +.005" (.127mm) -.000" (.000mm) in	C mm	D +.005" (.127mm) -.000" (.000mm) in	D mm
9	.408	10.36	.270	6.86	.570	14.48	.089	2.26
15	.558	14.17	.270	6.86	.720	14.48	.089	2.26
21	.708	17.98	.270	6.86	.870	22.10	.089	2.26
25	.808	20.52	.270	6.86	.970	24.64	.089	2.26
31	.958	24.33	.270	6.86	1.120	28.45	.089	2.26
37	1.108	28.14	.270	6.86	1.270	32.26	.089	2.26
51	1.058	26.87	.315	8.00	1.220	30.99	.089	2.26
100	1.450	36.84	.361	9.17	1.805	45.86	.117	2.97

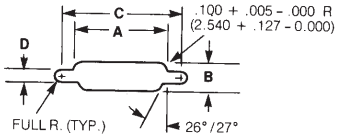

Rear Mounting

No. of Contacts	A +.004" (.101mm) -.000" (.000mm) in	A mm	B +.004" (.101mm) -.000" (.000mm) in	B mm	C +.005" (.127mm) -.000" (.000mm) in	C mm	D +.005" (.127mm) -.000" (.000mm) in	D mm
9	.408	10.36	.256	6.50	.570	14.48	.089	2.26
15	.558	14.17	.256	6.50	.720	18.29	.089	2.26
21	.708	17.98	.256	6.50	.870	22.10	.089	2.26
25	.808	20.52	.256	6.50	.970	24.64	.089	2.26
31	.958	24.33	.256	6.50	1.120	28.45	.089	2.26
37	1.108	28.14	.256	6.50	1.270	32.26	.089	2.26
51	1.058	26.87	.300	7.62	1.220	30.99	.089	2.26
100	1.450	36.84	.338	8.58	1.805	45.86	.117	2.97

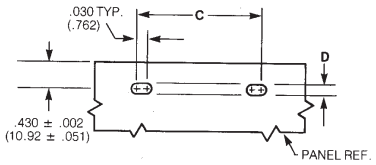

Edgeboard Mounting

No. of Contacts	C +.005" (.127mm) -.000" (.000mm) in	C mm	D +.005" (.127mm) -.000" (.000mm) in	D mm
9	.570	14.48	.089	2.26
15	.720	18.29	.089	2.26
21	.870	22.10	.089	2.26
25	.970	24.64	.089	2.26
31	1.120	28.45	.089	2.26
37	1.270	32.26	.089	2.26
51	1.220	30.99	.089	2.26
100	1.805	45.86	.117	2.97

Plastic Shell

Contact Arrangements

(Face view of pin insert)
(Use reverse order for socket side)

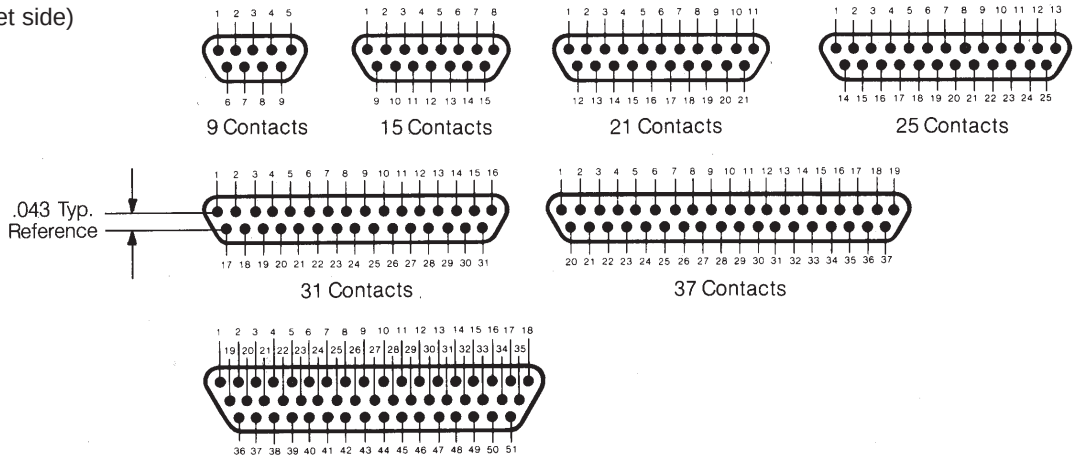

Ordering Information

M83513/06-A 04

Connector Type

06 - Plastic Shell Plugs with Solder Cup Termination

07 - Plastic Shell Sockets with Solder Cup Termination

08 - Plastic Shell Plugs with Wire Leads

09 - Plastic Shell Sockets with Wire Leads

Insert Arrangements
(No. of Contacts)

A = 9
B = 15
C = 21
D = 25
E = 31
F = 37
G = 51

Wire Type (Use only for /08 & /09, otherwise omit)

01 - M22759/11-26-9, 18 inches, White
02 - M22759/11-26-9, 36 inches, White
03 - M22759/11-26-( ), 18 inches, Color Coded
04 - M22759/11-26-( ), 36 inches, Color Coded
05 - QQ-W-343, 25 AWG, 0.5 inch, Gold-Plated
06 - QQ-W-343, 25 AWG, 1.0 inch, Gold-Plated
07 - QQ-W-343, 25 AWG, 0.5 inch, Tin-Plated
08 - QQ-W-343, 25 AWG, 1.0 inch, Tin-Plated
09 - M22759/33-26-9, 18 inches, White
10 - M22759/33-26-9, 36 inches, White
11 - M22759/33-26-( ), 18 inches, Color Coded
12 - M22759/33-26-( ), 36 inches, Color Coded
13 - M22759/11-26-9, 72 inches, White
14 - M22759/11-26-( ), 72 inches, Color Coded
15 - M22759/33-26-9, 72 inches, White
16 - M22759/33-26-( ), 72 inches, Color Coded

Note: See page 5-31 for M83513 mounting hardware.

Shell Dimensions - (All-Plastic Version)

Plug

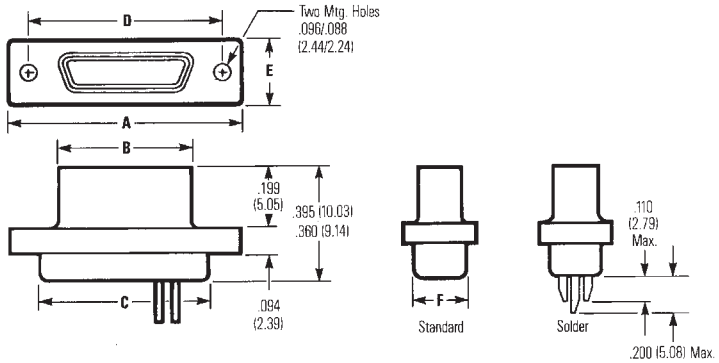

Socket

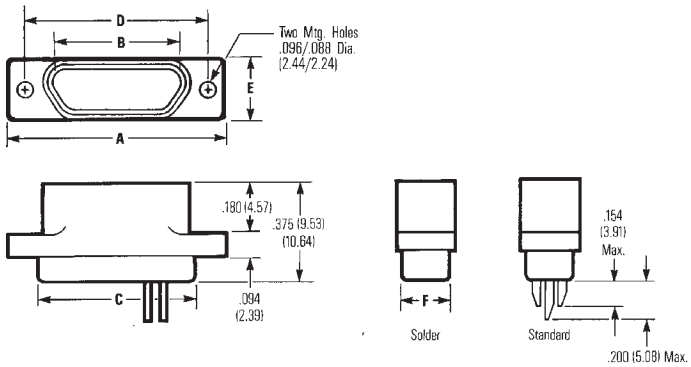

No. of Contacts	A ±.010" (.254) in	A mm	B Max. (Plug) Min. (Socket) in	B mm	C +.010" (.254) -.018" (.457) in	C mm	D ±.005" (.127) in	D mm	E ±.010" (.254) in	E mm	F Max. in	F Max. mm
9 Plug	.778	19.76	.2918	7.41	.398	10.11	.565	14.35	.208	5.28	.173	4.39
9 Socket	.778	19.76	.2922	7.42	.398	10.11	.565	14.35	.208	5.28	.173	4.39
15 Plug	.928	23.57	.4418	11.22	.548	13.92	.715	18.16	.208	5.28	.173	4.39
15 Socket	.928	23.57	.4422	11.23	.548	13.92	.715	18.16	.208	5.28	.173	4.39
21 Plug	1.078	27.38	.5918	15.03	.698	17.73	.865	21.97	.208	5.28	.173	4.39
21 Socket	1.078	27.38	.5922	15.04	.698	17.73	.865	21.97	.208	5.28	.173	4.39
25 Plug	1.178	29.92	.6918	17.57	.798	20.27	.965	24.51	.208	5.28	.173	4.39
25 Socket	1.178	29.92	.6922	17.58	.798	20.27	.965	24.51	.208	5.28	.173	4.39
31 Plug	1.328	33.73	.8418	21.38	.948	24.08	1.115	28.32	.208	5.28	.173	4.39
31 Socket	1.328	33.73	.8422	21.39	.948	24.08	1.115	28.32	.208	5.28	.173	4.39
37 Plug	1.478	37.54	.9918	25.19	1.098	27.89	1.265	32.13	.208	5.28	.173	4.39
37 Socket	1.478	37.54	.9922	25.20	1.098	27.89	1.265	32.13	.208	5.28	.173	4.39
51 Plug	1.428	36.27	.9418	23.92	1.048	26.62	1.215	30.86	.250	6.35	.220	5.59
51 Socket	1.428	36.27	.9422	23.93	1.048	26.62	1.215	30.86	.250	6.35	.220	5.59

Panel Mounting Dimensions - All-Plastic

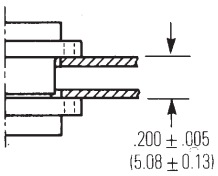

Plug and socket, rear mounted

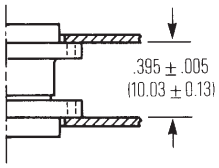

Plug and socket, front mounted

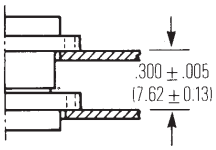

Plug, front mounted; Socket, rear mounted

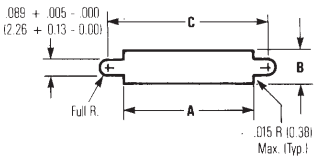

Front Mounting

Panel Cutout Dimensions

No. of Contacts	A +.004" (.101mm) -.000" (.000mm) in	A mm	B +.004" (.101mm) -.000" (.000mm) in	B mm	C +.005" (.127mm) -.000" (.000mm) in	C mm
9	.408	10.36	.172	4.37	.570	14.48
15	.558	14.17	.172	4.37	.720	14.48
21	.708	17.98	.172	4.37	.870	22.10
25	.808	20.52	.172	4.37	.970	24.64
31	.958	24.33	.172	4.37	1.120	28.45
37	1.108	28.14	.172	4.37	1.270	32.26
51	1.058	26.87	.215	5.46	1.220	30.99

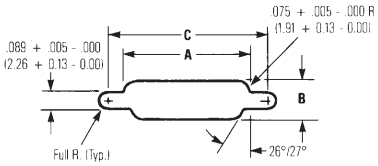

Rear Mounting

Rear Cutout Dimensions

No. of Contacts	A +.004" (.101mm) -.000" (.000mm) in	A mm	B +.004" (.101mm) -.000" (.000mm) in	B mm	C +.005" (.127mm) -.000" (.000mm) in	C mm
9	.373	9.47	.216	5.49	.570	14.48
15	.523	13.28	.216	5.49	.720	18.29
21	.674	17.12	.216	5.49	.870	22.10
25	.774	19.66	.216	5.49	.970	24.64
31	.924	23.47	.216	5.49	1.120	28.45
37	1.074	27.28	.216	5.49	1.270	32.26
51	1.024	26.01	.259	6.58	1.220	30.99

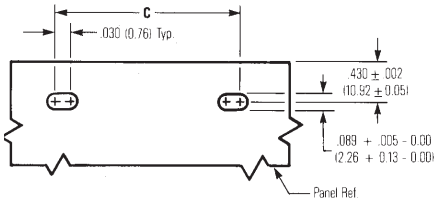

Edgeboard Mounting

Edgeboard Mounting Cutout Dimensions

No. of Contacts	D +.005" (.127mm) -.000" (.000mm) in	D mm
9	.570	14.48
15	.720	18.29
21	.870	22.10
25	.970	24.64
31	1.120	28.45
37	1.270	32.26
51	1.220	30.99

Terminal Block

Contact Arrangements

(Face view of pin insert)
(Use reverse order for socket side)

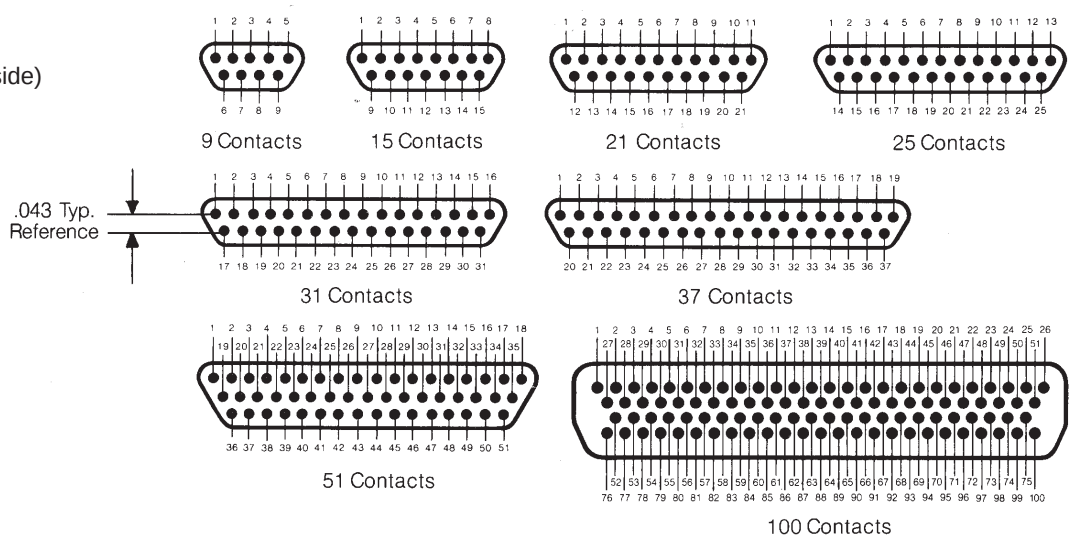

Ordering Information

M83513/10 - C 02 C N

Connector Description
10 = Plug, 9-37 Pos., Narrow Profile, Rt. Angle
11 = Plug, 51 Pos., Narrow Profile, Rt. Angle
12 = Plug, 100 Pos., Narrow Profile, Rt. Angle
13 = Socket, 9-37 Pos., Narrow Profile, Rt. Angle
14 = Socket, 51 Pos., Narrow Profile, Rt. Angle
15 = Socket, 100 Pos., Narrow Profile, Rt. Angle
16 = Plug, 9-37 Pos., Std. Profile, Rt. Angle
17 = Plug, 51 Pos., Std. Profile, Rt. Angle
18 = Plug, 100 Pos., Std. Profile, Rt. Angle
19 = Socket, 9-37 Pos., Std. Profile, Rt. Angle
20 = Socket, 51 Pos., Std. Profile, Rt. Angle
21 = Socket, 100 Pos., Std. Profile, Rt. Angle
22 = Plug, 9-37 Pos., Straight Mount
23 = Plug, 51 Pos., Straight Mount
24 = Plug, 100 Pos., Straight Mount
25 = Socket, 9-37 Pos., Straight Mount
26 = Socket, 51 Pos., Straight Mount
27 = Socket, 100 Pos., Straight Mount

Hardware
N = No Jackpost
P = Jackpost Attached

Shell Finish
C = Cadmium
N = Electroless Nickel

Termination Length
01 = 0.109
02 = 0.140
03 = 0.172

Insert Arrangement Length
(No. of Contacts)
A = 9
B = 15
C = 21
D = 25
E = 31
F = 37
G = 51
H = 100

5

90° Termination
(/16-/21)

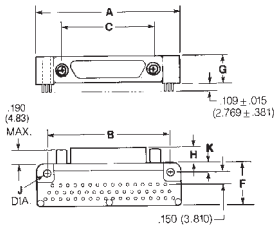

Recommended Board Layout

(As Viewed from Bottom of Terminal Block)

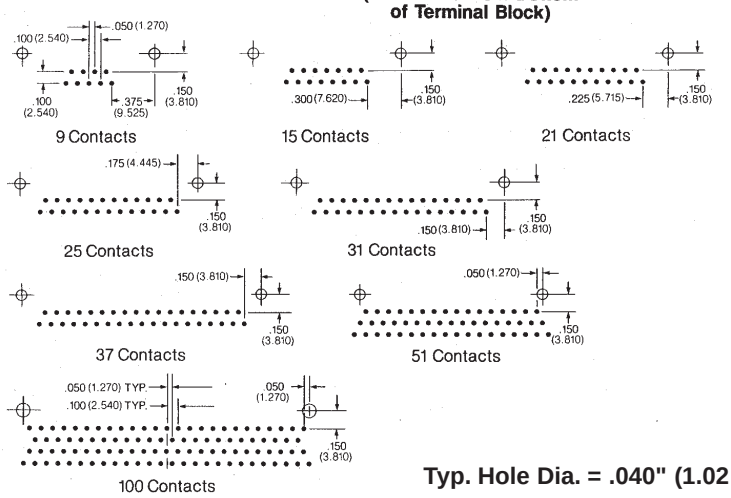

Typ. Hole Dia. = .040" (1.02 mm)

NOTE: For additional connector dimensions, see page 5-22.

No. of Contacts	A Max. in	A Max. mm	B ± .007 (0.18) in	B ± .007 (0.18) mm	C ± .005 (0.13) in	C ± .005 (0.13) mm	F Max. in	F Max. mm
9 Plug	1.390	35.31	1.150	29.21	.565	14.35	.465	11.81
9 Socket	1.390	35.31	1.150	29.21	.565	14.35	.465	11.81
15 Plug	1.540	39.12	1.300	33.02	.715	18.16	.465	11.81
15 Socket	1.540	39.12	1.300	33.02	.715	18.16	.465	11.81
21 Plug	1.690	42.93	1.450	36.83	.865	21.97	.465	11.81
21 Socket	1.690	42.93	1.450	36.83	.865	21.97	.465	11.81
25 Plug	1.790	45.47	1.550	39.37	.965	24.51	.465	11.81
25 Socket	1.790	45.47	1.550	39.37	.965	24.51	.465	11.81
31 Plug	2.040	51.82	1.800	45.72	1.115	28.32	.465	11.81
31 Socket	2.040	51.82	1.800	45.72	1.115	28.32	.465	11.81
37 Plug	2.340	59.44	2.100	53.34	1.265	32.13	.465	11.81
37 Socket	2.340	59.44	2.100	53.34	1.265	32.13	.465	11.81
51 Plug	1.875	47.63	1.600	40.64	1.215	30.86	.565	14.35
51 Socket	1.875	47.63	1.600	40.64	1.215	30.86	.565	14.35
100 Plug	2.780	70.61	2.500	63.50	1.800	45.72	.765	19.43
100 Socket	2.780	70.61	2.500	63.50	1.800	45.72	.765	19.43

No. of Contacts	G Max. in	G Max. mm	H Max. in	H Max. mm	J ± .005 (0.13) in	J ± .005 (0.13) mm	K ± .015 in	K ± .015 mm
9 Plug	.308	7.82	.190	4.83	.096	2.44	.125	3.18
9 Socket	.308	7.82	.200	5.08	.096	2.44	.125	3.18
15 Plug	.308	7.82	.190	4.83	.096	2.44	.125	3.18
15 Socket	.308	7.82	.200	5.08	.096	2.44	.125	3.18
21 Plug	.308	7.82	.190	4.83	.096	2.44	.125	3.18
21 Socket	.308	7.82	.200	5.08	.096	2.44	.125	3.18
25 Plug	.308	7.82	.190	4.83	.096	2.44	.125	3.18
25 Socket	.308	7.82	.200	5.08	.096	2.44	.125	3.18
31 Plug	.308	7.82	.190	4.83	.096	2.44	.125	3.18
31 Socket	.308	7.82	.200	5.08	.096	2.44	.125	3.18
37 Plug	.308	7.82	.190	4.83	.096	2.44	.125	3.18
37 Socket	.308	7.82	.200	5.08	.096	2.44	.125	3.18
51 Plug	.351	8.92	.190	4.83	.096	2.44	.125	3.18
51 Socket	.351	8.92	.200	5.08	.096	2.44	.125	3.18
100 Plug	.394	10.00	.190	4.83	.125	3.18	.225	5.72
100 Socket	.394	10.00	.200	5.08	.125	3.18	.225	5.72

Straight (180°) Termination (/22-/27)

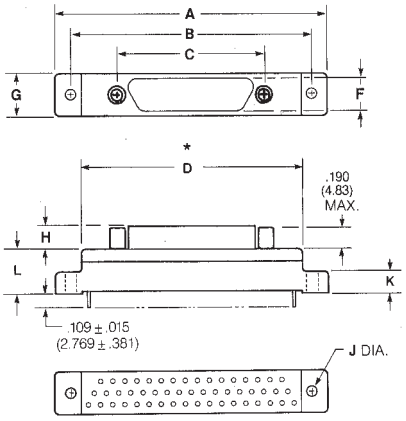

Recommended Board Layout

(As Viewed from Bottom of Terminal Block)

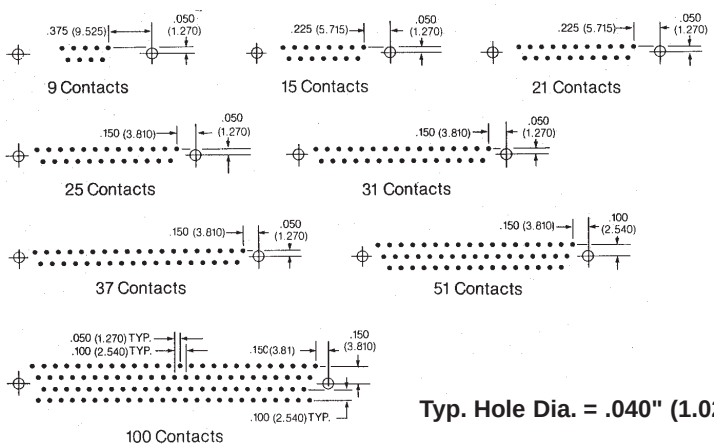

Typ. Hole Dia. = .040" (1.02 mm)

NOTE: For additional connector dimensions, see page 5-22.

No. of	A Max.		B ± .007 (0.18)		C ± .005 (0.13)		D Max.		G Max.	
Contacts	in	mm	in	mm	in	mm	in	mm	in	mm
9 Plug	1.390	35.31	1.150	29.21	.565	14.35	.885	22.48	.308	7.75
9 Socket	1.390	35.31	1.150	29.21	.565	14.35	.885	22.48	.308	7.75
15 Plug	1.390	35.31	1.150	29.21	.715	18.16	.945	24.0	.308	7.75
15 Socket	1.390	35.31	1.150	29.21	.715	18.16	.945	24.0	.308	7.75
21 Plug	1.690	42.93	1.450	36.83	.865	21.97	1.185	30.09	.308	7.75
21 Socket	1.690	42.93	1.450	36.83	.865	21.97	1.185	30.09	.308	7.75
25 Plug	1.740	44.20	1.500	38.10	.965	24.51	1.275	32.38	.308	7.75
25 Socket	1.740	44.20	1.500	38.10	.965	24.51	1.275	32.38	.308	7.75
31 Plug	2.040	51.82	1.800	45.72	1.115	28.32	1.575	40.00	.308	7.75
31 Socket	2.040	51.82	1.800	45.72	1.115	28.32	1.576	40.00	.308	7.75
37 Plug	2.340	59.44	2.100	53.34	1.265	32.13	1.875	47.62	.308	7.75
37 Socket	2.340	59.44	2.100	53.34	1.265	32.13	1.875	47.62	.308	7.75
51 Plug	2.270	57.66	2.000	50.80	1.215	30.86	1.775	45.08	.351	8.92
51 Socket	2.270	57.66	2.000	50.80	1.215	30.86	1.775	45.08	.351	8.92
100 Plug	3.070	77.98	2.800	71.12	1.800	45.72	2.585	65.55	.455	11.56
100 Socket	3.070	77.98	2.800	71.12	1.800	45.72	2.585	65.65	.455	11.56

No. of	H Max.		J ± .005 (0.13)		K Max.		L Max.	
Contacts	in	mm	in	mm	in	mm	in	mm
9 Plug	.190	4.83	.096	2.44	.165	4.19	.355	9.02
9 Socket	.200	5.08	.096	2.44	.165	4.19	.355	9.02
15 Plug	.190	4.83	.096	2.44	.165	4.19	.355	9.02
15 Socket	.200	5.08	.096	2.44	.165	4.19	.355	9.02
21 Plug	.190	4.83	.096	2.44	.165	4.19	.355	9.02
21 Socket	.200	5.08	.096	2.44	.165	4.19	.355	9.02
25 Plug	.190	4.83	.096	2.44	.165	4.19	.355	9.02
25 Socket	.200	5.08	.096	2.44	.165	4.19	.355	9.02
31 Plug	.190	4.83	.096	2.44	.165	4.19	.355	9.02
31 Socket	.200	5.08	.096	2.44	.165	4.19	.355	9.02
37 Plug	.190	4.83	.096	2.44	.165	4.19	.355	9.02
37 Socket	.200	5.08	.096	2.44	.165	4.19	.355	9.02
51 Plug	.190	4.83	.096	2.44	.165	4.19	.355	9.02
51 Socket	.200	5.08	.096	2.44	.165	4.19	.355	9.02
100 Plug	.190	4.83	.125	3.18	.300	7.62	.550	13.97
100 Socket	.200	5.08	.125	3.18	.300	7.62	.550	13.97

90° Narrow Termination (/10-/15)

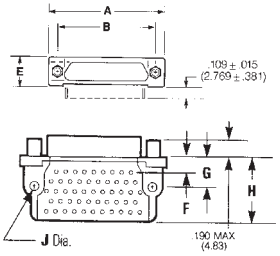

Recommended Board Layout

(As Viewed from Bottom of Terminal Block)

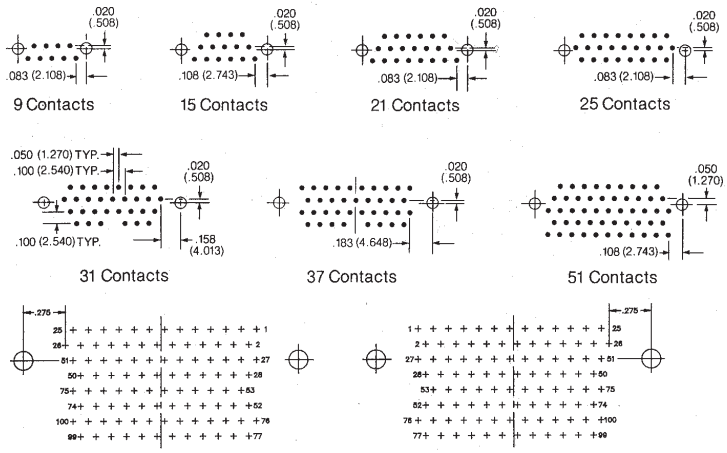

NOTE: For additional connector dimensions, see page 5-22.

Typ. Hole Dia. = .040" (1.02 mm)

No. of Contacts	A Max. in	A Max. mm	B ± .005 (0.13) in	B ± .005 (0.13) mm	C Max. in	C Max. mm
9 Plug	.785	19.94	.565	14.35	.308	7.82
9 Socket	.785	19.94	.565	14.35	.308	7.82
15 Plug	.935	23.75	.715	18.16	.308	7.82
15 Socket	.935	23.75	.715	18.16	.308	7.82
21 Plug	1.085	27.56	.865	21.97	.308	7.82
21 Socket	1.085	27.56	.865	21.97	.308	7.82
25 Plug	1.085	30.10	.965	24.51	.308	7.82
25 Socket	1.185	30.10	.965	24.51	.308	7.82
31 Plug	1.335	33.91	1.115	28.32	.308	7.82
31 Socket	1.335	33.91	1.115	28.32	.308	7.82
37 Plug	1.485	37.72	1.265	32.13	.308	7.82
37 Socket	1.485	37.72	1.265	32.13	.308	7.82
51 Plug	1.435	36.45	1.215	30.86	.351	8.92
51 Socket	1.435	36.45	1.215	30.86	.351	8.92
100 Plug	2.175	55.25	1.800	45.72	.394	10.00
100 Socket	2.175	55.25	1.800	45.72	.394	10.00

No. of Contacts	F ± .010 (0.25) in	F ± .010 (0.25) mm	G ± .010 (0.25) in	G ± .010 (0.25) mm	H Max. in	H Max. mm	J ± .005 (0.13) in	J ± .005 (0.13) mm
9 Plug	.230	5.84	.250	6.35	.420	10.67	.096	2.44
9 Socket	.230	5.84	.250	6.35	.420	10.67	.096	2.44
15 Plug	.130	3.30	.250	6.35	.420	10.67	.096	2.44
15 Socket	.130	3.30	.250	6.35	.420	10.67	.096	2.44
21 Plug	.130	3.30	.250	6.35	.420	10.67	.096	2.44
21 Socket	.130	3.30	.250	6.35	.420	10.67	.096	2.44
25 Plug	.130	3.30	.250	6.35	.420	10.67	.096	2.44
25 Socket	.130	3.30	.250	6.35	.420	10.67	.096	2.44
31 Plug	.130	3.30	.250	6.35	.520	13.21	.996	2.44
31 Socket	.130	3.30	.250	6.35	.520	13.21	.096	2.44
37 Plug	.130	3.30	.250	6.35	.520	13.21	.096	2.44
37 Socket	.130	3.30	.250	6.35	.520	13.21	.096	2.44
51 Plug	.150	3.81	.300	7.62	.650	16.51	.096	2.44
51 Socket	.150	3.81	.300	7.62	.650	16.51	.096	2.44
100 Plug	.200	5.08	.400	10.16	1.000	25.40	.125	3.18
100 Socket	.200	5.08	.400	10.16	1.000	25.40	.125	3.18

Mounting Hardware

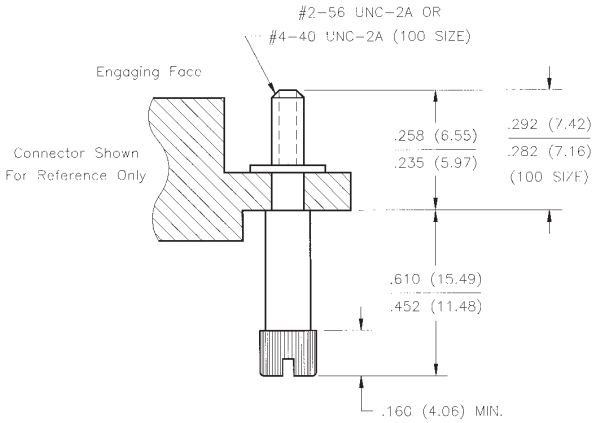

High Profile Jackscrew

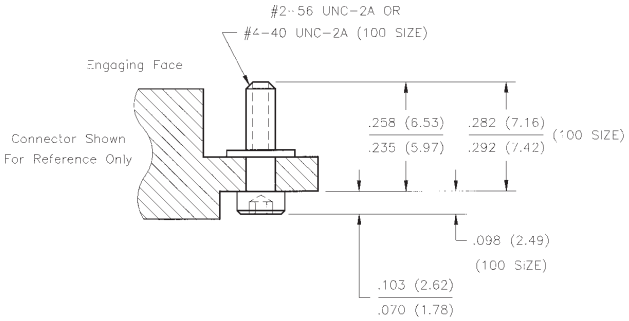

Low Profile Jackscrew

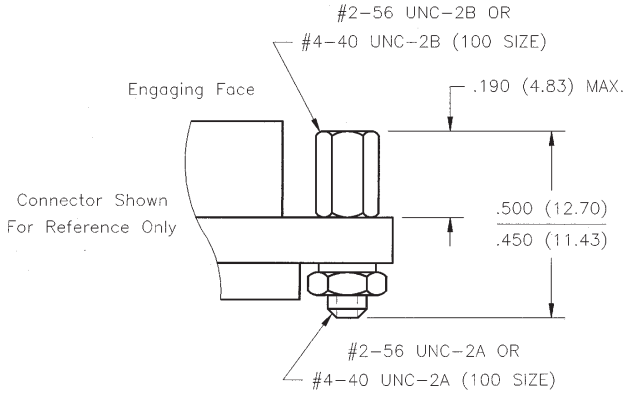

Removable Jackpost

Ordering Information

Type	Style	Screwhead	Thread	Military Part No.
Jackscrew	Low Profile	Recessed Hex	2/56	M83513/5-02
Jackscrew	High Profile	Recessed Hex	2/56	M83513/5-03
Jackscrew	Low Profile	Slotted	2/56	M83513/5-05
Jackscrew	High Profile	Slotted	2/56	M83513/5-06
Jackpost	--	--	2/56	M83513/5-07
Jackscrew	Low Profile	Hex	4/40*	M83513/5-12
Jackscrew	High Profile	Hex	4/40*	M83513/5-13
Jackscrew	Low Profile	Slotted	4/40*	M83513/5-15
Jackscrew	High Profile	Slotted	4/40*	M83513/5-16
Jackpost	--	--	4/40*	M83513/5-17

*100 Size Only

Dura-Con High Reliability All-Plastic & Metal Shell

.050" (1.27mm) Density Connector Saver

Cinch

Features

- ***Designed to significantly reduce damage to already mounted Dura-Con connectors during routine system tests.***
- ***Eliminates numerous mating & unmating cycles experienced by connectors on test harnesses.***
- ***Plug connector on one end, socket connector on the other.***
- ***Available in all-plastic (polyester) or in metal shell with diallyl phthalate or polyester insulators (both UL94V-0 rated).***
- ***Locking hardware must be ordered separately.***

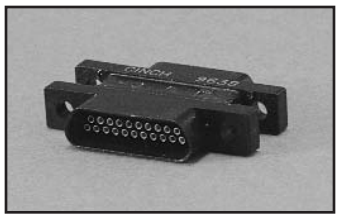

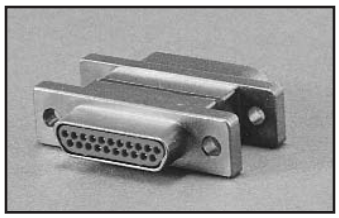

Materials

Insulator: UL94V-0 glass-filled polyester or diallyl phthalate

Contacts: Copper alloy

Contact Plating: .000050 in gold

Shell (Metal Only): Aluminum alloy

Shell Plating: Yellow chromate over cadmium

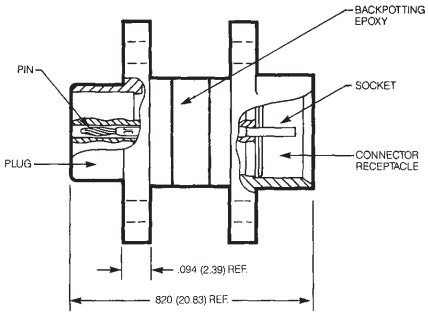

Environmental

Operating Temperature: -55°C to +135°C

Electrical

Current Rating: 3 Amps maximum

Withstanding Voltage: 600 VAC RMS @ sea level

Contact Resistance: 8 milliohms maximum

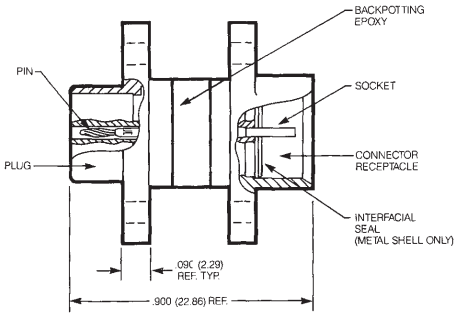

Mechanical

Individual Contact: Insertion force, 6 oz. (170.40 g) maximum; Withdrawal force 0.5 oz. (14.20 g) minimum

Mating / Unmating Forces: See previous tables

	Metal Shell		All Plastic
No. of	Diallyl Phthalate	Glass-Filled Polyester	Glass-Filled Polyester
Contacts	Catalog No.	Catalog No.	Catalog No.
9	DCCM9CS	DCDM9CS	DCDA9CS
15	DCCM15CS	DCDM15CS	DCDA15CS
21	DCCM21CS	DCDM21CS	DCDA21CS
25	DCCM25CS	DCDM25CS	DCDA25CS
31	DCCM31CS	DCDM31CS	DCDA31CS
37	DCCM37CS	DCDM37CS	DCDA37CS
51	DCCM51CS	DCDM51CS	DCDA51CS
100	DCCM100CS	DCDM100CS	–

Dura-Con High Reliability Microedge Connectors

.050" (1.27mm) Density
PC Board Mount
Metal Shell

Cinch

Features

- ***Variety of available PC board mounting styles.***
  - ***"Coke Bottle" for edge mounting on double-sided PCBs***
  - ***Right-angle (90°) mounting for single- or double-sided daughter boards***
  - ***"Claw Foot" leads***
  - ***Gold-plated solid copper wire pigtails***
- ***Harnessing capabilities exist for both plug & socket.***
- ***Standard sizes are 128 and 184 positions.***
- ***Utilizes high-reliability Dura-Con twist pin contact system assuring electrical continuity under extreme shock and vibration.***
- ***Aluminum shells and diallyl phthalate insulators make Dura-Con microedge connectors ideal for airborne or space applications.***
- ***Microedge metal shell connectors meet the requirement of MIL-C-55302.***

Materials

Insulator: UL94V-0 glass-filled polyester or diallyl phthalate per MIL-M-14 (green)
Contacts: Copper alloy
Contact Plating: .000050 in Gold
Shell: Aluminum alloy
Shell Plating: Electroless Nickel

Environmental

Operating Temperature: -55°C to +135°C

Electrical

Current Rating: 3 Amps maximum
Withstanding Voltage: 600 VAC RMS @ sea level, 300 VAC @ 70,000 ft.
Contact Resistance: 8 milliohms maximum

Mechanical

Insertion/Withdrawal Force:

6 oz. (170.40 g[f]) maximum insertion force, per contact;
0.5 oz. (14.20 g[f]) minimum withdrawal force, per contact

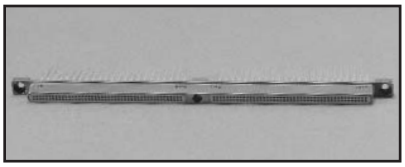

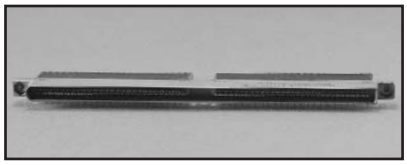

128 Contact Receptacle (Right Angle)

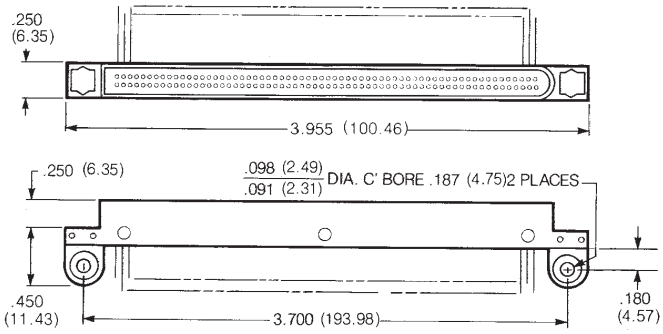

Side View and Termination Grid Pattern

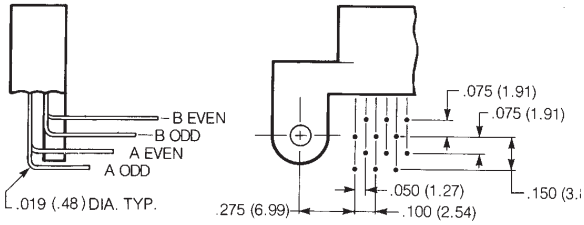

128 Contact Receptacle (Stranded Insulated Wire)

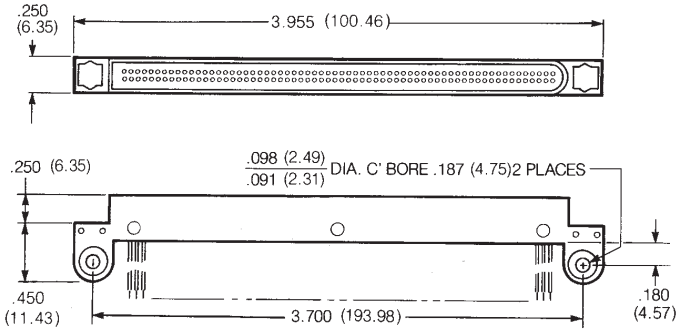

Side View

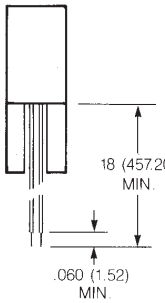

128 Contact Plug (Claw Foot)

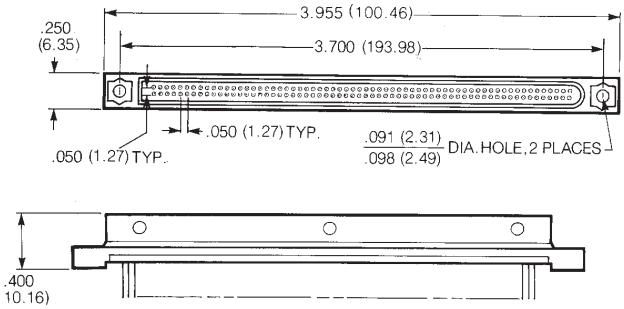

Side View and Termination Grid Pattern

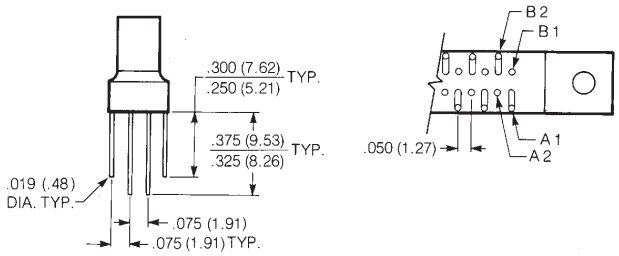

5

128 Contact Plug (Stranded Insulated Wire)

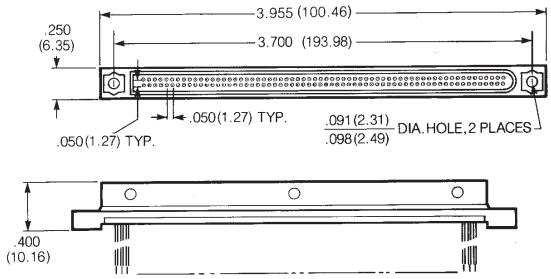

Side View

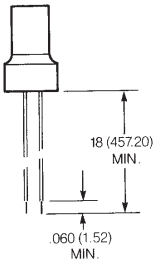

184 Contact Receptacle (Coke Bottle)

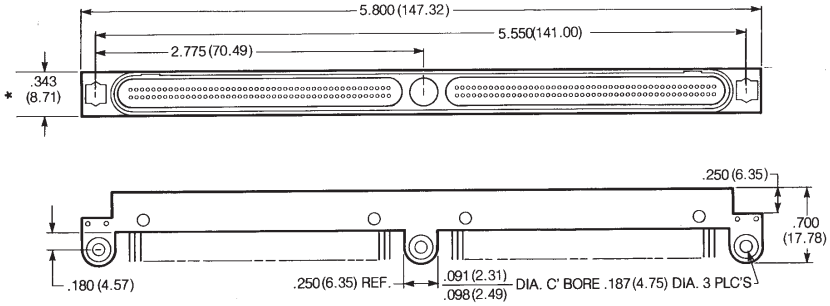

Side View

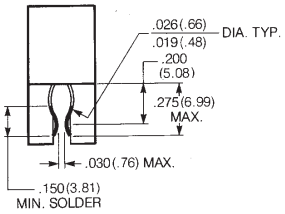

Recommended PCB thickness .047-.062.
Consult factory for other thicknesses.

184 Contact Receptacle (Stranded Insulated Wire)

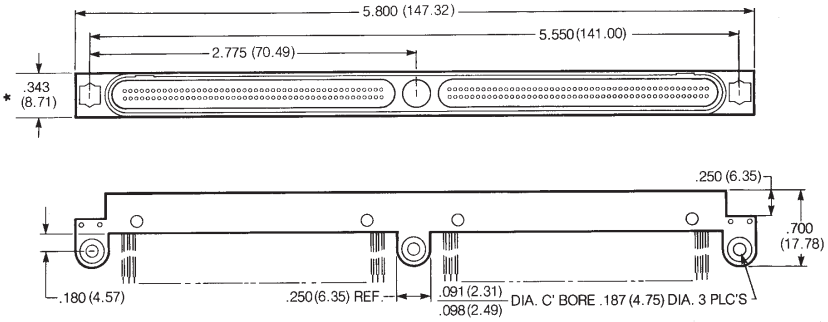

Side View

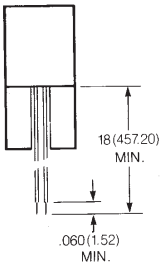

184 Contact Plug (Claw Foot)

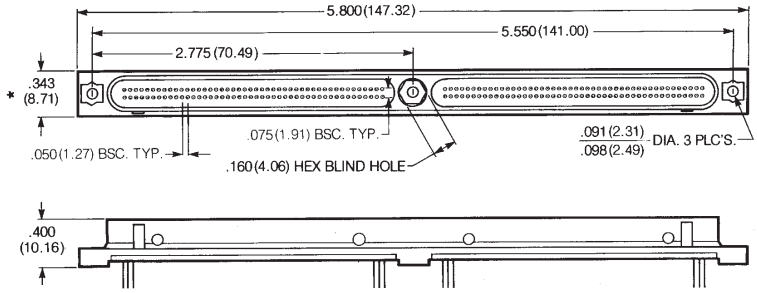

Side View and Termination Grid Pattern

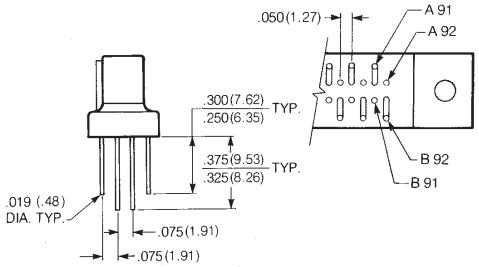

*** Narrow Version (DNEB) .250 Wide**

184 Contact Plug (Standard Insulated Wire)

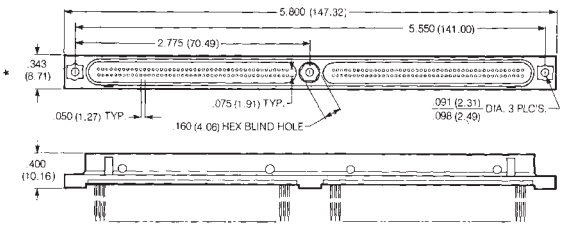

Side View

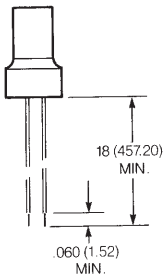

*** Narrow Version (DNEB) .250 Wide**

Shell Polarization Kit

Order No.	"L"	Used On
DNEBP0L1	.250	DNEB Narrow Only
DMEBP0L1	.312	DMEB Std. Width

Key

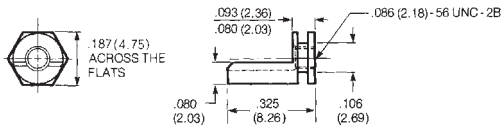

Retaining Pin

Mounting Hardware

Removable Jackscrew/Jackpost Assembly

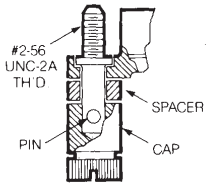

Consult factory if required.

Standard Jackscrew/Jackpost Assembly

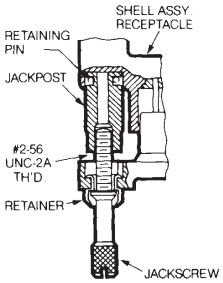

Plug with Jackscrew

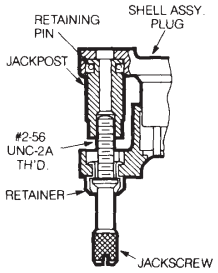

Receptacle with Jackscrew

Ordering Information

DMEB 1-128 P 6 E 2 180

Series Prefix
DMEB = Microedgeboard
DNEB = Microedgeboard, Narrow (184 Only)

Contact Spacing
1 = .050" (1.27mm) centers
128/184
2 = .100" (2.54mm) centers
64/92 (every other contact hole)
For other contact spacing accommodations, consult the factory.

No. of Contacts
128, 184

Contact Type
P = Pin
S = Socket

Wire Size in AWG
5 = 25 AWG Solid Copper
6 = 26 AWG Stranded Wire
S = Solder Cup

Lead Length in Inches

Termination, Color of Finish
1 = White
***2** = Yellow
3 = Tin-Plated
***4** = Gold-Plated (Solid Copper Wire Only)
***5** = Color Coded per MIL-Std. 681, System 1

Wire Type/Termination Style
C = Solid Copper
E = MIL-W-16878/4, 7 Strand
BS = PC Board (Coke Bottle)
BRA = PC Board Right-Angle (Formed to "A" Side)
BRB = PC Board Right-Angle (Formed to "B" Side)
W = PC Board (Claw Foot)

*Indicates Cinch std Option

5

Dura-Con High Reliability Strip Connectors

.050" (1.27mm) Density
Solder Cup/Wire
All-Plastic

Cinch

Features

- ***Lightweight.***
- ***Slim Profile.***
- ***High-Density Interconnect.***
- ***High-reliability Dura-Con twist pin contact system for extreme shock & vibration applications.***
- ***Optional polarization with guide pins to prevent mismating connectors.***
- ***Plug & socket available in sizes from 1 to 60 positions.***

Materials

Insulator: UL94V-0 glass-filled polyester
Contacts: Copper alloy
Contact Plating: .000050 in gold

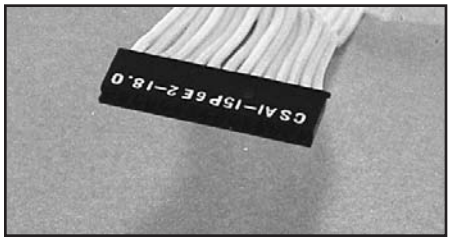

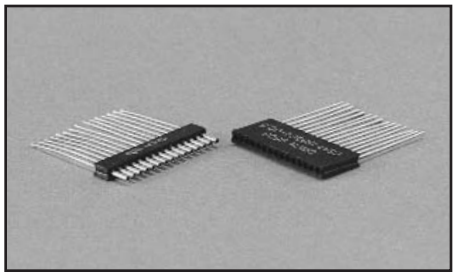

Environmental

Operating Temperature: -55°C to +135°C

Electrical

Current Rating:	3 Amps maximum
Withstanding Voltage:	600 VAC @ sea level; 150 VAC @ 70,000 ft.
Contact Resistance:	8 milliohms maximum

Mechanical

Insertion & Withdrawal Force (Per Contact):

6 oz. (170.40 g[f]) maximum insertion;
0.5 oz. (14.20 g[f]) minimum withdrawal

Dura-Con High Reliability Strip Connectors

.050" (1.27mm) Density
Solder Cup/Wire
All Plastic

Cinch

Dimensions

Socket Connector

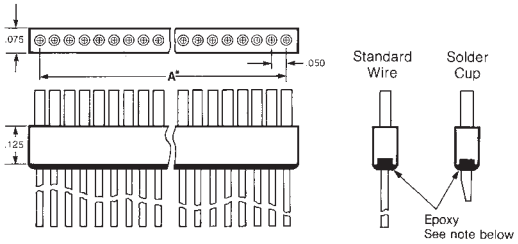

Pin Connector

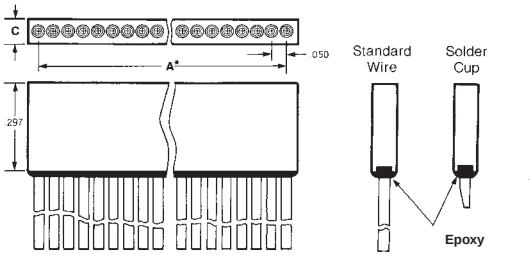

24 Gauge Stainless Steel Guide Pin*

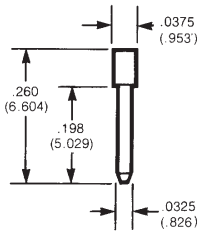

NOTE: Dimension A is number of positions less 1 multiplied by .050

* Assembly in socket connector only.

Ordering Information

CS A 1 10 P 4 C 4-00.5 G

Cinch Dura-Con Strip
Thermoplastic
Glass-Reinforced
Strip Connector

Contact Centers
A = .050 (24 Ga.)

Contact Position
1 = Contacts in every position

No. of Contact Positions
1 through 60**

Contact Type
P = Pin
S = Socket

Wire Size in AWG
5 = 25 AWG Solid Copper Wire
6 = 26 AWG Stranded Wire
S = Solder Cup (Skip to guide pin field if necessary)

Guide Pin (Socket Only)
Empty Cavity (Pin Only)
G02 = Guide Pin Position No. 2
GX = Special Position, Consult Factory

Lead Length in inches
00.5 Solid copper wire only
01.0 Solid copper wire only
02.0 Solid copper wire only
18.0 Stranded wire only
24.0 Stranded wire only
36.0 Stranded wire only
48.0 Stranded wire only

Insulation Color, Solid Wire Finish, Solid Cup Finish
1 = All White
***2** = All Yellow
3 = Tin-Plated
***4** = Gold-Plated (Solid Wire Only)
***5** = Color Coded Per MIL-Std. 681, System 1
System 1. (Stranded Wire Only)

Insulation Wire or Solid Wire Type
C = Solid Copper
E = MIL-W-168 78/4, 7 Strand

* - Indicates Cinch std. option.
** - Consult factory for larger sizes and multi-row.

Call Toll Free: 1 (800) 323-9612

Mouser Electronics

Authorized Distributor

Click to View Pricing, Inventory, Delivery & Lifecycle Information:

Cinch Connectivity Solutions:

DCCM31SCBRPN DCCM15SBSP DCCM100PCBRP DCCM21P6E5-18.0B DCCM21PCBRPN DCCM25SCBRP DCCM31PBSPN DCCM31S6E5-36.0B DCCM37PSBN DCCM51PSB DCCM9P6E5-36.0B DCCM100S6E5-36.0B DCCM100SBSP DCCM15S6E5-18.0BN DCCM21PSB DCCM25PCBRPN DCCM25SBSP DCCM31S6E5-18.0BN DCCM37P6E5-36.0BN DCCM37SCBRPN DCCM51SBSP DCCM9SBSP DCCM9SSBN DCCM15P6E5-36.0B DCCM15S6E5-36.0B DCCM21SSB DCCM25PCBRP DCCM25S6E5-36.0BN DCCM31PBSP DCCM9PBSP DCCM9S6E5-36.0BN DCCM51P6E5-36.0B DCCM25PBSP DCCM100PBSP DCCM100SBSPN DCCM37P6E5-18.0B DCCM37S6E5-18.0BN DCCM37SCBRP DCCM37SSB DCCM51PCBRP DCCM51SBSPN DCCM15P6E5-18.0BN DCCM15P6E5-36.0BN DCCM15S6E5-36.0BN DCCM21SCBRPN DCCM21SSBN DCCM25PBSPN DCCM37P6E5-18.0BN DCCM37PSB DCCM37S6E5-18.0B DCCM37SSBN DCCM9P6E5-36.0BN DCCM9PBSPN DCCM15S6E5-18.0B DCCM21P6E5-36.0B DCCM21SCBRP DCCM25SBSPN DCCM25SCBRPN DCCM31S6E5-36.0BN DCCM37S6E5-36.0BN DCCM51S6E5-36.0BN DCCM9PSB DCCM9S6E5-18.0B DCCM100S6E5-36.0BN DCCM15P6E5-18.0B DCCM21PBSP DCCM21PBSPN DCCM21PCBRP DCCM25P6E5-36.0B DCCM25P6E5-36.0BN DCCM25SSB DCCM51SSBN DCCM9P6E5-18.0B DCCM9SBSPN DCCM9SCBRPN DCCM100S6E5-18.0BN DCCM15PBSP DCCM9S6E5-18.0BN DCCM37PCBRP DCCM51P6E5-18.0B DCCM51P6E5-36.0BN DCCM51PBSP DCCM51SSB DCCM21P6E5-18.0BN DCCM21S6E5-18.0B DCCM31P6E5-36.0BN DCCM31S6E5-18.0B DCCM37P6E5-36.0B DCCM51SCBRPN DCCM37PBSPN DCCM9P6E5-18.0BN DCCM9SCBRP DCCM100PBSPN DCCM100PCBRPN DCCM15SSBN DCCM15SBSPN DCCM15SCBRP DCCM37PBSP DCCM51S6E5-18.0BN DCCM51S6E5-36.0B

Компания «ЭлектроПласт» предлагает заключение долгосрочных отношений при поставках импортных электронных компонентов на взаимовыгодных условиях!

Наши преимущества:

- Оперативные поставки широкого спектра электронных компонентов отечественного и импортного производства напрямую от производителей и с крупнейших мировых складов;
- Поставка более 17-ти миллионов наименований электронных компонентов;
- Поставка сложных, дефицитных, либо снятых с производства позиций;
- Оперативные сроки поставки под заказ (от 5 рабочих дней);
- Экспресс доставка в любую точку России;
- Техническая поддержка проекта, помощь в подборе аналогов, поставка прототипов;
- Система менеджмента качества сертифицирована по Международному стандарту ISO 9001;
- Лицензия ФСБ на осуществление работ с использованием сведений, составляющих государственную тайну;
- Поставка специализированных компонентов (Xilinx, Altera, Analog Devices, Intersil, Interpoint, Microsemi, Aeroflex, Peregrine, Syfer, Eurofarad, Texas Instrument, Miteq, Cobham, E2V, MA-COM, Hittite, Mini-Circuits,General Dynamics и др.);

Помимо этого, одним из направлений компании «ЭлектроПласт» является направление «Источники питания». Мы предлагаем Вам помощь Конструкторского отдела:

- Подбор оптимального решения, техническое обоснование при выборе компонента;
- Подбор аналогов;
- Консультации по применению компонента;
- Поставка образцов и прототипов;
- Техническая поддержка проекта;
- Защита от снятия компонента с производства.

Как с нами связаться

Телефон: 8 (812) 309 58 32 (многоканальный)
Факс: 8 (812) 320-02-42
Электронная почта: org@eplast1.ru
Адрес: 198099, г. Санкт-Петербург, ул. Калинина, дом 2, корпус 4, литера А.