# Spartan-3A FPGA Family: Data Sheet

DS529 December 18, 2018

**Product Specification**

## Module 1: Introduction and Ordering Information

**DS529 (v2.1) December 18, 2018**

- Introduction
- Features
- Architectural and Configuration Overview
- General I/O Capabilities
- Production Status
- Supported Packages and Package Marking
- Ordering Information

## Module 2: Spartan-3A FPGA Family: Functional Description

**DS529 (v2.1) December 18, 2018**

The functionality of the Spartan®-3A FPGA family is described in the following documents.

- UG331: *Spartan-3 Generation FPGA User Guide*
  - Clocking Resources
  - Digital Clock Managers (DCMs)
  - Block RAM
  - Configurable Logic Blocks (CLBs)
    - Distributed RAM
    - SRL16 Shift Registers
    - Carry and Arithmetic Logic
  - I/O Resources
  - Embedded Multiplier Blocks
  - Programmable Interconnect
  - ISE® Design Tools and IP Cores
  - Embedded Processing and Control Solutions
  - Pin Types and Package Overview
  - Package Drawings
  - Powering FPGAs
  - Power Management
- UG332: *Spartan-3 Generation Configuration User Guide*
  - Configuration Overview
  - Configuration Pins and Behavior
  - Bitstream Sizes
  - Detailed Descriptions by Mode
    - Master Serial Mode using Platform Flash PROM
    - Master SPI Mode using Commodity Serial Flash
    - Master BPI Mode using Commodity Parallel Flash
    - Slave Parallel (SelectMAP) using a Processor
    - Slave Serial using a Processor
    - JTAG Mode
  - ISE iMPACT Programming Examples
  - MultiBoot Reconfiguration
  - Design Authentication using Device DNA
- UG334: *Spartan-3A/3AN FPGA Starter Kit User Guide*

## Module 3: DC and Switching Characteristics

**DS529 (v2.1) December 18, 2018**

- DC Electrical Characteristics
  - Absolute Maximum Ratings
  - Supply Voltage Specifications
  - Recommended Operating Conditions
- Switching Characteristics
  - I/O Timing
  - Configurable Logic Block (CLB) Timing
  - Multiplier Timing
  - Block RAM Timing
  - Digital Clock Manager (DCM) Timing
  - Suspend Mode Timing
  - Device DNA Timing
  - Configuration and JTAG Timing

## Module 4: Pinout Descriptions

**DS529 (v2.1) December 18, 2018**

- Pin Descriptions
- Package Overview
- Pinout Tables
- Footprint Diagrams

For more information on the Spartan-3A FPGA family, go to www.xilinx.com/spartan3a

| Spartan-3A FPGA | Status |
|---|---|
| XC3S50A | Production |
| XC3S200A | Production |
| XC3S400A | Production |
| XC3S700A | Production |
| XC3S1400A | Production |

© Copyright 2006–2018 Xilinx, Inc. XILINX, the Xilinx logo, Virtex, Spartan, ISE, and other designated brands included herein are trademarks of Xilinx in the United States and other countries. PCI is a registered trademark of the PCI-SIG. All other trademarks are the property of their respective owners.

# Spartan-3A FPGA Family: Introduction and Ordering Information

DS529 (v2.1) December 18, 2018 **Product Specification**

## Introduction

The Spartan®-3A family of Field-Programmable Gate Arrays (FPGAs) solves the design challenges in most high-volume, cost-sensitive, I/O-intensive electronic applications. The five-member family offers densities ranging from 50,000 to 1.4 million system gates, as shown in Table 1.

The Spartan-3A FPGAs are part of the Extended Spartan-3A family, which also include the non-volatile Spartan-3AN and the higher density Spartan-3A DSP FPGAs. The Spartan-3A family builds on the success of the earlier Spartan-3E and Spartan-3 FPGA families. New features improve system performance and reduce the cost of configuration. These Spartan-3A family enhancements, combined with proven 90 nm process technology, deliver more functionality and bandwidth per dollar than ever before, setting the new standard in the programmable logic industry.

Because of their exceptionally low cost, Spartan-3A FPGAs are ideally suited to a wide range of consumer electronics applications, including broadband access, home networking, display/projection, and digital television equipment.

The Spartan-3A family is a superior alternative to mask programmed ASICs. FPGAs avoid the high initial cost, lengthy development cycles, and the inherent inflexibility of conventional ASICs, and permit field design upgrades.

## Features

- Very low cost, high-performance logic solution for high-volume, cost-conscious applications
- Dual-range $V_{CCAUX}$ supply simplifies 3.3V-only design
- Suspend, Hibernate modes reduce system power
- Multi-voltage, multi-standard SelectIO™ interface pins
  - Up to 502 I/O pins or 227 differential signal pairs
  - LVCMOS, LVTTL, HSTL, and SSTL single-ended I/O
  - 3.3V, 2.5V, 1.8V, 1.5V, and 1.2V signaling
  - Selectable output drive, up to 24 mA per pin
  - QUIETIO standard reduces I/O switching noise
  - Full 3.3V ± 10% compatibility and hot swap compliance
  - 640+ Mb/s data transfer rate per differential I/O
  - LVDS, RSDS, mini-LVDS, HSTL/SSTL differential I/O with integrated differential termination resistors
  - Enhanced Double Data Rate (DDR) support
  - DDR/DDR2 SDRAM support up to 400 Mb/s
  - Fully compliant 32-/64-bit, 33/66 MHz PCI® technology support
- Abundant, flexible logic resources
  - Densities up to 25,344 logic cells, including optional shift register or distributed RAM support
  - Efficient wide multiplexers, wide logic
  - Fast look-ahead carry logic
  - Enhanced 18 x 18 multipliers with optional pipeline
  - IEEE 1149.1/1532 JTAG programming/debug port
- Hierarchical SelectRAM™ memory architecture
  - Up to 576 Kbits of fast block RAM with byte write enables for processor applications
  - Up to 176 Kbits of efficient distributed RAM
- Up to eight Digital Clock Managers (DCMs)
  - Clock skew elimination (delay locked loop)
  - Frequency synthesis, multiplication, division
  - High-resolution phase shifting
  - Wide frequency range (5 MHz to over 320 MHz)
- Eight low-skew global clock networks, eight additional clocks per half device, plus abundant low-skew routing
- Configuration interface to industry-standard PROMs
  - Low-cost, space-saving SPI serial Flash PROM
  - x8 or x8/x16 BPI parallel NOR Flash PROM
  - Low-cost Xilinx® Platform Flash with JTAG
  - Unique Device DNA identifier for design authentication
  - Load multiple bitstreams under FPGA control
  - Post-configuration CRC checking
- Complete Xilinx ISE® and WebPACK™ development system software support plus Spartan-3A Starter Kit
- MicroBlaze™ and PicoBlaze™ embedded processors
- Low-cost QFP and BGA packaging, Pb-free options
  - Common footprints support easy density migration
  - Compatible with select Spartan-3AN nonvolatile FPGAs
  - Compatible with higher density Spartan-3A DSP FPGAs
- XA Automotive version available

*Table 1:* **Summary of Spartan-3A FPGA Attributes**

| Device | System Gates | Equivalent Logic Cells | CLB Array (One CLB = Four Slices) | | | | Distributed RAM bits(1) | Block RAM bits(1) | Dedicated Multipliers | DCMs | Maximum User I/O | Maximum Differential I/O Pairs |
|---|---|---|---|---|---|---|---|---|---|---|---|---|
| | | | Rows | Columns | CLBs | Slices | | | | | | |
| XC3S50A | 50K | 1,584 | 16 | 12 | 176 | 704 | 11K | 54K | 3 | 2 | 144 | 64 |
| XC3S200A | 200K | 4,032 | 32 | 16 | 448 | 1,792 | 28K | 288K | 16 | 4 | 248 | 112 |
| XC3S400A | 400K | 8,064 | 40 | 24 | 896 | 3,584 | 56K | 360K | 20 | 4 | 311 | 142 |
| XC3S700A | 700K | 13,248 | 48 | 32 | 1,472 | 5,888 | 92K | 360K | 20 | 8 | 372 | 165 |
| XC3S1400A | 1400K | 25,344 | 72 | 40 | 2,816 | 11,264 | 176K | 576K | 32 | 8 | 502 | 227 |

**Notes:**
1. By convention, one Kb is equivalent to 1,024 bits.

© Copyright 2006–2018 Xilinx, Inc. XILINX, the Xilinx logo, Virtex, Spartan, ISE, and other designated brands included herein are trademarks of Xilinx in the United States and other countries. PCI is a registered trademark of the PCI-SIG. All other trademarks are the property of their respective owners.

## Architectural Overview

The Spartan-3A family architecture consists of five fundamental programmable functional elements:

- **Configurable Logic Blocks (CLBs)** contain flexible Look-Up Tables (LUTs) that implement logic plus storage elements used as flip-flops or latches. CLBs perform a wide variety of logical functions as well as store data.
- **Input/Output Blocks (IOBs)** control the flow of data between the I/O pins and the internal logic of the device. IOBs support bidirectional data flow plus 3-state operation. Supports a variety of signal standards, including several high-performance differential standards. Double Data-Rate (DDR) registers are included.
- **Block RAM** provides data storage in the form of 18-Kbit dual-port blocks.
- **Multiplier Blocks** accept two 18-bit binary numbers as inputs and calculate the product.
- **Digital Clock Manager (DCM) Blocks** provide self-calibrating, fully digital solutions for distributing, delaying, multiplying, dividing, and phase-shifting clock signals.

These elements are organized as shown in Figure 1. A dual ring of staggered IOBs surrounds a regular array of CLBs. Each device has two columns of block RAM except for the XC3S50A, which has one column. Each RAM column consists of several 18-Kbit RAM blocks. Each block RAM is associated with a dedicated multiplier. The DCMs are positioned in the center with two at the top and two at the bottom of the device. The XC3S50A has DCMs only at the top, while the XC3S700A and XC3S1400A add two DCMs in the middle of the two columns of block RAM and multipliers.

The Spartan-3A family features a rich network of routing that interconnect all five functional elements, transmitting signals among them. Each functional element has an associated switch matrix that permits multiple connections to the routing.

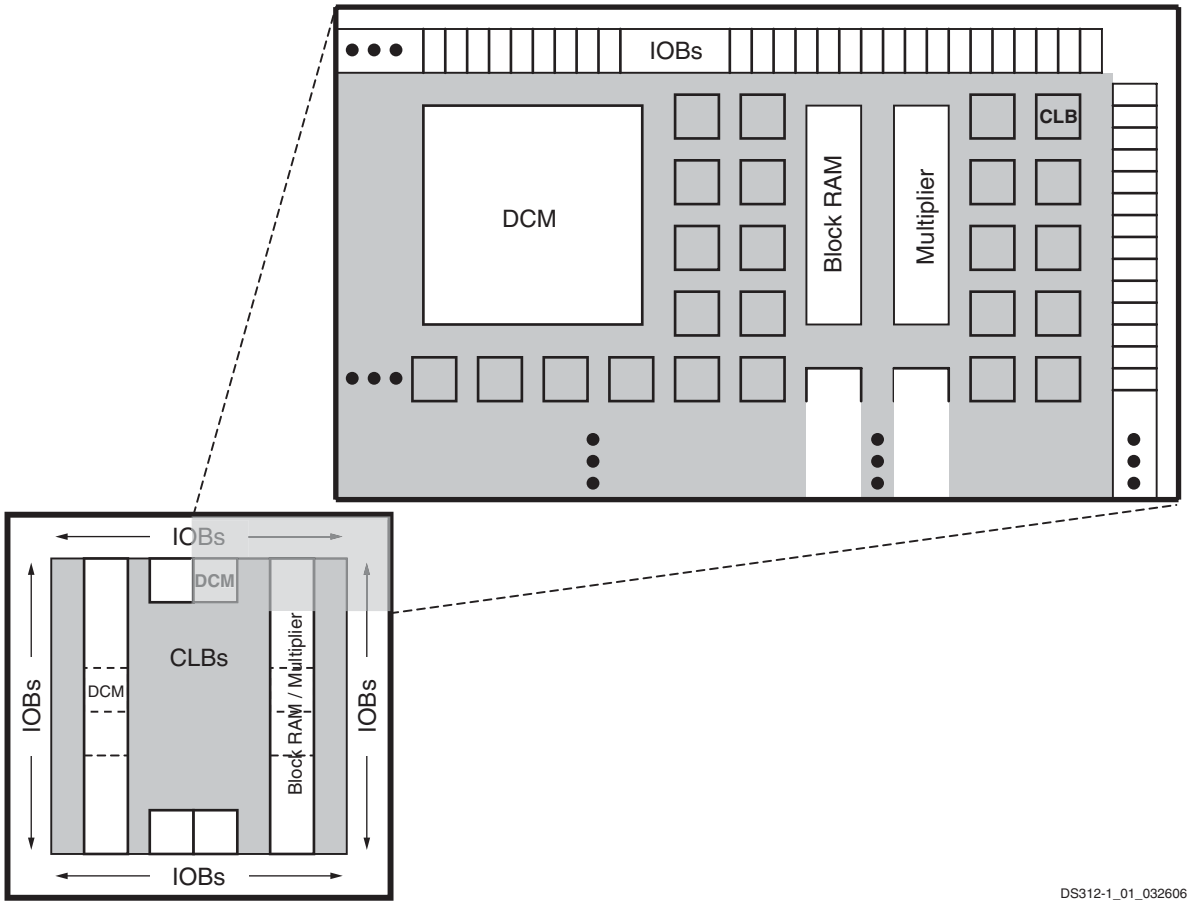


**Notes:**

1. The XC3S700A and XC3S1400A have two additional DCMs on both the left and right sides as indicated by the dashed lines. The XC3S50A has only two DCMs at the top and only one Block RAM/Multiplier column.

*Figure 1:* **Spartan-3A FPGA Architecture**

## Configuration

Spartan-3A FPGAs are programmed by loading configuration data into robust, reprogrammable, static CMOS configuration latches (CCLs) that collectively control all functional elements and routing resources. The FPGA's configuration data is stored externally in a PROM or some other non-volatile medium, either on or off the board. After applying power, the configuration data is written to the FPGA using any of seven different modes:

- Master Serial from a Xilinx Platform Flash PROM
- Serial Peripheral Interface (SPI) from an industry-standard SPI serial Flash
- Byte Peripheral Interface (BPI) Up from an industry-standard x8 or x8/x16 parallel NOR Flash
- Slave Serial, typically downloaded from a processor
- Slave Parallel, typically downloaded from a processor
- Boundary Scan (JTAG), typically downloaded from a processor or system tester

Furthermore, Spartan-3A FPGAs support MultiBoot configuration, allowing two or more FPGA configuration bitstreams to be stored in a single SPI serial Flash or a BPI parallel NOR Flash. The FPGA application controls which configuration to load next and when to load it.

Additionally, each Spartan-3A FPGA contains a unique, factory-programmed Device DNA identifier useful for tracking purposes, anti-cloning designs, or IP protection.

## I/O Capabilities

The Spartan-3A FPGA SelectIO interface supports many popular single-ended and differential standards. Table 2 shows the number of user I/Os as well as the number of differential I/O pairs available for each device/package combination. Some of the user I/Os are unidirectional input-only pins as indicated in Table 2.

Spartan-3A FPGAs support the following single-ended standards:

- 3.3V low-voltage TTL (LVTTL)
- Low-voltage CMOS (LVCMOS) at 3.3V, 2.5V, 1.8V, 1.5V, or 1.2V
- 3.3V PCI at 33 MHz or 66 MHz
- HSTL I, II, and III at 1.5V and 1.8V, commonly used in memory applications
- SSTL I and II at 1.8V, 2.5V, and 3.3V, commonly used for memory applications

Spartan-3A FPGAs support the following differential standards:

- LVDS, mini-LVDS, RSDS, and PPDS I/O at 2.5V or 3.3V
- Bus LVDS I/O at 2.5V
- TMDS I/O at 3.3V
- Differential HSTL and SSTL I/O
- LVPECL inputs at 2.5V or 3.3V

*Table 2:* **Available User I/Os and Differential (Diff) I/O Pairs**

| Package | VQ100 VQG100 | | TQ144 TQG144 | | FT256 FTG256 | | FG320 FGG320 | | FG400 FGG400 | | FG484 FGG484 | | FG676 FGG676 | |
|---|---|---|---|---|---|---|---|---|---|---|---|---|---|---|
| Body Size (mm) | 14 x 14[2] | | 20 x 20[2] | | 17 x 17 | | 19 x 19 | | 21 x 21 | | 23 x 23 | | 27 x 27 | |
| Device | User | Diff | User | Diff | User | Diff | User | Diff | User | Diff | User | Diff | User | Diff |
| XC3S50A | **68** *(13)* | **60** *(24)* | **108** *(7)* | **50** *(24)* | **144** *(32)* | **64** *(32)* | - | - | - | - | - | - | - | - |
| XC3S200A | **68** *(13)* | **60** *(24)* | - | - | **195** *(35)* | **90** *(50)* | **248** *(56)* | **112** *(64)* | - | - | - | - | - | - |
| XC3S400A | - | - | - | - | **195** *(35)* | **90** *(50)* | **251** *(59)* | **112** *(64)* | **311** *(63)* | **142** *(78)* | - | - | - | - |
| XC3S700A | - | - | - | - | **161** *(13)* | **74** *(36)* | - | - | **311** *(63)* | **142** *(78)* | **372** *(84)* | **165** *(93)* | - | - |
| XC3S1400A | - | - | - | - | **161** *(13)* | **74** *(36)* | - | - | - | - | **375** *(87)* | **165** *(93)* | **502** *(94)* | **227** *(131)* |

**Notes:**

1. The number shown in **bold** indicates the maximum number of I/O and input-only pins. The number shown in (*italics*) indicates the number of input-only pins. The differential (Diff) input-only pin count includes both differential pairs on input-only pins and differential pairs on I/O pins within I/O banks that are restricted to differential inputs.
2. The footprints for the VQ/TQ packages are larger than the package body. See the Package Drawings for details.

## Production Status

Table 3 indicates the production status of each Spartan-3A FPGA by temperature range and speed grade. The table also lists the earliest speed file version required for creating a production configuration bitstream. Later versions are also supported.

*Table 3:* **Spartan-3A FPGA Production Status (Production Speed File)**

| Temperature Range | | Commercial (C) | | Industrial |
|---|---|---|---|---|
| Speed Grade | | Standard (–4) | High-Performance (–5) | Standard (–4) |
| Part Number | XC3S50A | Production (v1.35) | Production (v1.35) | Production (v1.35) |
| | XC3S200A | Production (v1.35) | Production (v1.35) | Production (v1.35) |
| | XC3S400A | Production (v1.36) | Production (v1.36) | Production (v1.36) |
| | XC3S700A | Production (v1.34) | Production (v1.35) | Production (v1.34) |
| | XC3S1400A | Production (v1.34) | Production (v1.35) | Production (v1.34) |

## Package Marking

Figure 2 provides a top marking example for Spartan-3A FPGAs in the quad-flat packages. Figure 3 shows the top marking for Spartan-3A FPGAs in BGA packages. The markings for the BGA packages are nearly identical to those for the quad-flat packages, except that the marking is rotated with respect to the ball A1 indicator.

The "5C" and "4I" Speed Grade/Temperature Range part combinations may be dual marked as "5C/4I". Devices with a single mark are only guaranteed for the marked speed grade and temperature range.

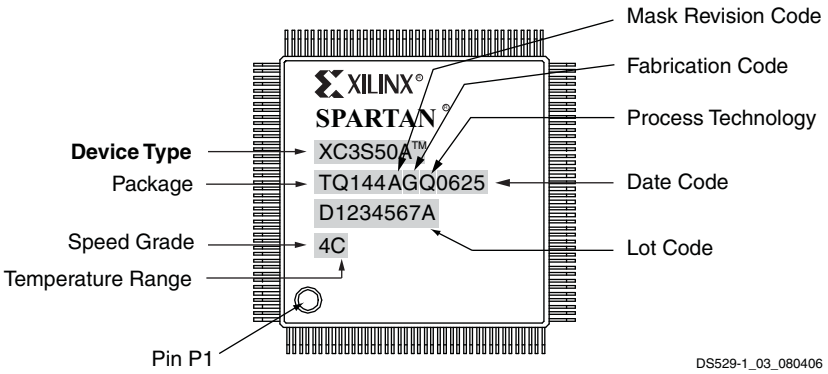


*Figure 2:* **Spartan-3A QFP Package Marking Example**

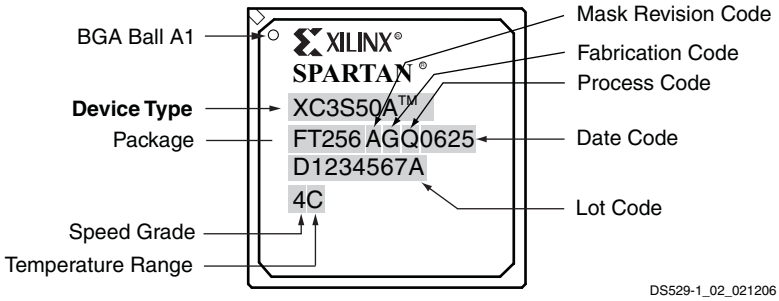


*Figure 3:* **Spartan-3A BGA Package Marking Example**

## Ordering Information

Spartan-3A FPGAs are available in both standard and Pb-free packaging options for all device/package combinations. The Pb-free packages include a 'G' character in the ordering code.

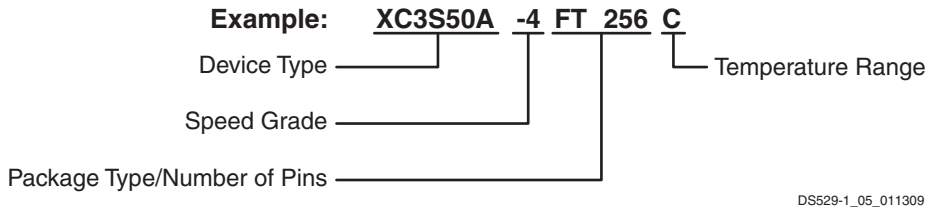


| Device | Speed Grade | | Package Type / Number of Pins[1] | | Temperature Range ($T_J$) | |
|---|---|---|---|---|---|---|
| XC3S50A | –4 | Standard Performance | VQ100/ VQG100 | 100-pin Very Thin Quad Flat Pack (VQFP) | C | Commercial (0°C to 85°C) |
| XC3S200A | –5 | High Performance (Commercial only) | TQ144/ TQG144 | 144-pin Thin Quad Flat Pack (TQFP) | I | Industrial (–40°C to 100°C) |
| XC3S400A | | | FT256/ FTG256 | 256-ball Fine-Pitch Thin Ball Grid Array (FTBGA) | | |
| XC3S700A | | | FG320/ FGG320 | 320-ball Fine-Pitch Ball Grid Array (FBGA) | | |
| XC3S1400A | | | FG400/ FGG400 | 400-ball Fine-Pitch Ball Grid Array (FBGA) | | |
| | | | FG484/ FGG484 | 484-ball Fine-Pitch Ball Grid Array (FBGA) | | |
| | | | FG676 FGG676 | 676-ball Fine-Pitch Ball Grid Array (FBGA) | | |

**Notes:**

1. See Table 2 for specific device/package combinations.
2. See DS681 for the XA Automotive Spartan-3A FPGAs.

## Revision History

The following table shows the revision history for this document.

| Date | Version | Revision |
|---|---|---|
| 12/05/06 | 1.0 | Initial release. |
| 02/02/07 | 1.1 | Promoted to Preliminary status. Updated maximum differential I/O count for XC3S50A in Table 1. Updated differential input-only pin counts in Table 2. |
| 03/16/07 | 1.2 | Minor formatting updates. |
| 04/23/07 | 1.3 | Added "Production Status" section. |
| 05/08/07 | 1.4 | Updated XC3S400A to Production. |
| 07/10/07 | 1.4.1 | Minor updates. |
| 04/15/08 | 1.6 | Added VQ100 for XC3S50A and XC3S200A and extended FT256 to XC3S700A and XC3S1400A Added reference to SCD 4103 for 750 Mbps performance. |
| 05/28/08 | 1.7 | Added reference to XA Automotive version. |
| 03/06/09 | 1.8 | Simplified Ordering Information. Added references to Extended Spartan-3A Family. Removed reference to SCD 4103. |
| 08/19/10 | 2.0 | Updated Table 2 to clarify TQ/VQ size. |
| 12/18/2018 | 2.1 | Updated for *Lead-Frame Plating Composition Change For Legacy Eutectic Products* (XCN18024). |

## Spartan-3A FPGA Design Documentation

The functionality of the Spartan®-3A FPGA Family is described in the following documents. The topics covered in each guide is listed below.

- **DS706: Extended Spartan-3A Family Overview** www.xilinx.com/support/documentation/data_sheets/ds706.pdf
- **UG331: Spartan-3 Generation FPGA User Guide** www.xilinx.com/support/documentation/user_guides/ug331.pdf
  - Clocking Resources
  - Digital Clock Managers (DCMs)
  - Block RAM
  - Configurable Logic Blocks (CLBs)
    - Distributed RAM
    - SRL16 Shift Registers
    - Carry and Arithmetic Logic
  - I/O Resources
  - Embedded Multiplier Blocks
  - Programmable Interconnect
  - ISE® Software Design Tools
  - IP Cores
  - Embedded Processing and Control Solutions
  - Pin Types and Package Overview
  - Package Drawings
  - Powering FPGAs
  - Power Management
- **UG332: Spartan-3 Generation Configuration User Guide** www.xilinx.com/support/documentation/user_guides/ug332.pdf
  - Configuration Overview
    - Configuration Pins and Behavior
    - Bitstream Sizes
  - Detailed Descriptions by Mode
    - Master Serial Mode using Xilinx® Platform Flash PROM
    - Master SPI Mode using Commodity SPI Serial Flash PROM
    - Master BPI Mode using Commodity Parallel NOR Flash PROM
    - Slave Parallel (SelectMAP) using a Processor
    - Slave Serial using a Processor
    - JTAG Mode
  - ISE iMPACT Programming Examples
  - MultiBoot Reconfiguration
  - Design Authentication using Device DNA

For application examples, see the Spartan-3A FPGA application notes.

- **Spartan-3A FPGA Application Notes** www.xilinx.com/support/documentation/spartan-3a_application_notes.htm

For specific hardware examples, please see the Spartan-3A FPGA Starter Kit board web page, which has links to various design examples and the user guide.

- **Spartan-3A/3AN FPGA Starter Kit Board Page** www.xilinx.com/s3astarter
- **UG334: Spartan-3A/3AN FPGA Starter Kit User Guide** www.xilinx.com/support/documentation/boards_and_kits/ug334.pdf

For information on the XA Automotive version of the Spartan-3A family, see the following data sheet.

- XA Spartan-3A Automotive FPGA Family Data Sheet www.xilinx.com/support/documentation/data_sheets/ds681.pdf

Create a Xilinx user account and sign up to receive automatic e-mail notification whenever this data sheet or the associated user guides are updated.

- Sign Up for Alerts

  www.xilinx.com/support/answers/18683.htm

© Copyright 2006–2018 Xilinx, Inc. XILINX, the Xilinx logo, Virtex, Spartan, ISE, and other designated brands included herein are trademarks of Xilinx in the United States and other countries. PCI is a registered trademark of the PCI-SIG. All other trademarks are the property of their respective owners.

## Related Product Families

The Spartan-3AN nonvolatile FPGA family is architecturally identical to the Spartan-3A FPGA family, except that it has in-system flash memory and is offered in select pin-compatible package options.

- **DS557: Spartan-3AN Family Data Sheet**
  www.xilinx.com/support/documentation/data_sheets/ds557.pdf

The compatible Spartan-3A DSP FPGA family replaces the 18-bit multiplier with the DSP48A block, while also increasing the block RAM capability and quantity. The two members of the Spartan-3A DSP FPGA family extend the Spartan-3A density range up to 37,440 and 53,712 logic cells.

- **DS610: Spartan-3A DSP FPGA Family Data Sheet**
  www.xilinx.com/support/documentation/data_sheets/ds610.pdf
- **UG431: XtremeDSP DSP48A for Spartan-3A DSP FPGAs**
  www.xilinx.com/support/documentation/user_guides/ug431.pdf

## Revision History

The following table shows the revision history for this document.

| Date | Version | Revision |
|---|---|---|
| 12/05/06 | 1.0 | Initial release. |
| 02/02/07 | 1.1 | Promoted to Preliminary status. |
| 03/16/07 | 1.2 | Added cross-reference to nonvolatile Spartan-3AN FPGA family. |
| 04/23/07 | 1.3 | Added cross-reference to compatible Spartan-3A DSP family. |
| 07/10/07 | 1.4 | Updated Starter Kit reference to new UG334. |
| 04/15/08 | 1.6 | Updated trademarks. |
| 05/28/08 | 1.7 | Added reference to XA Automotive version. |
| 03/06/09 | 1.8 | Added link to DS706 on Extended Spartan-3A family. |
| 08/19/10 | 2.0 | Updated link to sign up for Alerts. |
| 12/18/18 | | Updated for *Lead-Frame Plating Composition Change For Legacy Eutectic Products* (XCN18024). |

## DC Electrical Characteristics

In this section, specifications may be designated as Advance, Preliminary, or Production. These terms are defined as follows:

**Advance:** Initial estimates are based on simulation, early characterization, and/or extrapolation from the characteristics of other families. Values are subject to change. Use as estimates, not for production.

**Preliminary:** Based on characterization. Further changes are not expected.

**Production:** These specifications are approved once the silicon has been characterized over numerous production lots. Parameter values are considered stable with no future changes expected.

All parameter limits are representative of worst-case supply voltage and junction temperature conditions. **Unless otherwise noted, the published parameter values apply to all Spartan®-3A devices. AC and DC characteristics are specified using the same numbers for both commercial and industrial grades.**

### Absolute Maximum Ratings

Stresses beyond those listed under Table 4: Absolute Maximum Ratings may cause permanent damage to the device. These are stress ratings only; functional operation of the device at these or any other conditions beyond those listed under the Recommended Operating Conditions is not implied. Exposure to absolute maximum conditions for extended periods of time adversely affects device reliability.

*Table 4:* **Absolute Maximum Ratings**

| Symbol | Description | Conditions | Min | Max | Units |
|---|---|---|---|---|---|
| $V_{CCINT}$ | Internal supply voltage | | –0.5 | 1.32 | V |
| $V_{CCAUX}$ | Auxiliary supply voltage | | –0.5 | 3.75 | V |
| $V_{CCO}$ | Output driver supply voltage | | –0.5 | 3.75 | V |
| $V_{REF}$ | Input reference voltage | | –0.5 | $V_{CCO}$ + 0.5 | V |
| $V_{IN}$ | Voltage applied to all User I/O pins and dual-purpose pins | Driver in a high-impedance state | –0.95 | 4.6 | V |
| | Voltage applied to all Dedicated pins | | –0.5 | 4.6 | V |
| $I_{IK}$ | Input clamp current per I/O pin | $-0.5V < V_{IN} < (V_{CCO} + 0.5V)$ (1) | – | ±100 | mA |
| $V_{ESD}$ | Electrostatic Discharge Voltage | Human body model | – | ±2000 | V |
| | | Charged device model | – | ±500 | V |
| | | Machine model | – | ±200 | V |
| $T_J$ | Junction temperature | | – | 125 | °C |
| $T_{STG}$ | Storage temperature | | –65 | 150 | °C |

**Notes:**

1. Upper clamp applies only when using PCI IOSTANDARDs.
2. For soldering guidelines, see UG112: *Device Packaging and Thermal Characteristics* and XAPP427: *Implementation and Solder Reflow Guidelines for Pb-Free Packages*.

© Copyright 2006–2018 Xilinx, Inc. XILINX, the Xilinx logo, Virtex, Spartan, ISE, and other designated brands included herein are trademarks of Xilinx in the United States and other countries. PCI is a registered trademark of the PCI-SIG. All other trademarks are the property of their respective owners.

## Power Supply Specifications

*Table 5:* **Supply Voltage Thresholds for Power-On Reset**

| Symbol | Description | Min | Max | Units |
|---|---|---|---|---|
| $V_{CCINTT}$ | Threshold for the $V_{CCINT}$ supply | 0.4 | 1.0 | V |
| $V_{CCAUXT}$ | Threshold for the $V_{CCAUX}$ supply | 1.0 | 2.0 | V |
| $V_{CCO2T}$ | Threshold for the $V_{CCO}$ Bank 2 supply | 1.0 | 2.0 | V |

**Notes:**

1. $V_{CCINT}$, $V_{CCAUX}$, and $V_{CCO}$ supplies to the FPGA can be applied in any order. However, the FPGA's configuration source (Platform Flash, SPI Flash, parallel NOR Flash, microcontroller) might have specific requirements. Check the data sheet for the attached configuration source. Apply $V_{CCINT}$ last for lowest overall power consumption (see UG331 chapter "Powering Spartan-3 Generation FPGAs" for more information).
2. To ensure successful power-on, $V_{CCINT}$, $V_{CCO}$ Bank 2, and $V_{CCAUX}$ supplies must rise through their respective threshold-voltage ranges with no dips at any point.

*Table 6:* **Supply Voltage Ramp Rate**

| Symbol | Description | Min | Max | Units |
|---|---|---|---|---|
| $V_{CCINTR}$ | Ramp rate from GND to valid $V_{CCINT}$ supply level | 0.2 | 100 | ms |
| $V_{CCAUXR}$ | Ramp rate from GND to valid $V_{CCAUX}$ supply level | 0.2 | 100 | ms |
| $V_{CCO2R}$ | Ramp rate from GND to valid $V_{CCO}$ Bank 2 supply level | 0.2 | 100 | ms |

**Notes:**

1. $V_{CCINT}$, $V_{CCAUX}$, and $V_{CCO}$ supplies to the FPGA can be applied in any order. However, the FPGA's configuration source (Platform Flash, SPI Flash, parallel NOR Flash, microcontroller) might have specific requirements. Check the data sheet for the attached configuration source. Apply $V_{CCINT}$ last for lowest overall power consumption (see UG331 chapter "Powering Spartan-3 Generation FPGAs" for more information).
2. To ensure successful power-on, $V_{CCINT}$, $V_{CCO}$ Bank 2, and $V_{CCAUX}$ supplies must rise through their respective threshold-voltage ranges with no dips at any point.

*Table 7:* **Supply Voltage Levels Necessary for Preserving CMOS Configuration Latch (CCL) Contents and RAM Data**

| Symbol | Description | Min | Units |
|---|---|---|---|
| $V_{DRINT}$ | $V_{CCINT}$ level required to retain CMOS Configuration Latch (CCL) and RAM data | 1.0 | V |
| $V_{DRAUX}$ | $V_{CCAUX}$ level required to retain CMOS Configuration Latch (CCL) and RAM data | 2.0 | V |

## General Recommended Operating Conditions

*Table 8:* **General Recommended Operating Conditions**

| Symbol | Description | | | Min | Nominal | Max | Units |
|---|---|---|---|---|---|---|---|
| $T_J$ | Junction temperature | Commercial | | 0 | – | 85 | °C |
| | | Industrial | | –40 | – | 100 | °C |
| $V_{CCINT}$ | Internal supply voltage | | | 1.14 | 1.20 | 1.26 | V |
| $V_{CCO}$(1) | Output driver supply voltage | | | 1.10 | – | 3.60 | V |
| $V_{CCAUX}$ | Auxiliary supply voltage(2) | $V_{CCAUX}$ = 2.5 | | 2.25 | 2.50 | 2.75 | V |
| | | $V_{CCAUX}$ = 3.3 | | 3.00 | 3.30 | 3.60 | V |
| $V_{IN}$ | Input voltage(3) | PCI IOSTANDARD | | –0.5 | – | $V_{CCO}$+0.5 | V |
| | | All other IOSTANDARDs | IP or IO_# | –0.5 | – | 4.10 | V |
| | | | IO_Lxxy_#(4) | –0.5 | – | 4.10 | V |
| $T_{IN}$ | Input signal transition time(5) | | | – | – | 500 | ns |

**Notes:**

1. This $V_{CCO}$ range spans the lowest and highest operating voltages for all supported I/O standards. Table 11 lists the recommended $V_{CCO}$ range specific to each of the single-ended I/O standards, and Table 13 lists that specific to the differential standards.
2. Define $V_{CCAUX}$ selection using CONFIG VCCAUX constraint.
3. See XAPP459, "Eliminating I/O Coupling Effects when Interfacing Large-Swing Single-Ended Signals to User I/O Pins."
4. For single-ended signals that are placed on a differential-capable I/O, $V_{IN}$ of –0.2V to –0.5V is supported but can cause increased leakage between the two pins. See *Parasitic Leakage* in UG331, *Spartan-3 Generation FPGA User Guide*.
5. Measured between 10% and 90% $V_{CCO}$. Follow Signal Integrity recommendations.

## General DC Characteristics for I/O Pins

*Table 9:* **General DC Characteristics of User I/O, Dual-Purpose, and Dedicated Pins**(1)

| Symbol | Description | Test Conditions | | Min | Typ | Max | Units |
|---|---|---|---|---|---|---|---|
| $I_L$(2) | Leakage current at User I/O, input-only, dual-purpose, and dedicated pins, FPGA powered | Driver is in a high-impedance state, $V_{IN}$ = 0V or $V_{CCO}$ max, sample-tested | | –10 | – | +10 | µA |
| $I_{HS}$ | Leakage current on pins during hot socketing, FPGA unpowered | All pins except INIT_B, PROG_B, DONE, and JTAG pins when PUDC_B = 1. | | –10 | – | +10 | µA |
| | | INIT_B, PROG_B, DONE, and JTAG pins or other pins when PUDC_B = 0. | | Add $I_{HS}$ + $I_{RPU}$ | | | µA |
| $I_{RPU}$(3) | Current through pull-up resistor at User I/O, dual-purpose, input-only, and dedicated pins. Dedicated pins are powered by $V_{CCAUX}$. | $V_{IN}$ = GND | $V_{CCO}$ or $V_{CCAUX}$ = 3.0V to 3.6V | –151 | –315 | –710 | µA |
| | | | $V_{CCO}$ or $V_{CCAUX}$ = 2.3V to 2.7V | –82 | –182 | –437 | µA |
| | | | $V_{CCO}$ = 1.7V to 1.9V | –36 | –88 | –226 | µA |
| | | | $V_{CCO}$ = 1.4V to 1.6V | –22 | –56 | –148 | µA |
| | | | $V_{CCO}$ = 1.14V to 1.26V | –11 | –31 | –83 | µA |
| $R_{PU}$(3) | Equivalent pull-up resistor value at User I/O, dual-purpose, input-only, and dedicated pins (based on $I_{RPU}$ per Note 3) | $V_{IN}$ = GND | $V_{CCO}$ = 3.0V to 3.6V | 5.1 | 11.4 | 23.9 | kΩ |
| | | | $V_{CCO}$ = 2.3V to 2.7V | 6.2 | 14.8 | 33.1 | kΩ |
| | | | $V_{CCO}$ = 1.7V to 1.9V | 8.4 | 21.6 | 52.6 | kΩ |
| | | | $V_{CCO}$ = 1.4V to 1.6V | 10.8 | 28.4 | 74.0 | kΩ |
| | | | $V_{CCO}$ = 1.14V to 1.26V | 15.3 | 41.1 | 119.4 | kΩ |
| $I_{RPD}$(3) | Current through pull-down resistor at User I/O, dual-purpose, input-only, and dedicated pins. Dedicated pins are powered by $V_{CCAUX}$. | $V_{IN}$ = $V_{CCO}$ | $V_{CCAUX}$ = 3.0V to 3.6V | 167 | 346 | 659 | µA |
| | | | $V_{CCAUX}$ = 2.25V to 2.75V | 100 | 225 | 457 | µA |
| $R_{PD}$(3) | Equivalent pull-down resistor value at User I/O, dual-purpose, input-only, and dedicated pins (based on $I_{RPD}$ per Note 3) | $V_{CCAUX}$ = 3.0V to 3.6V | $V_{IN}$ = 3.0V to 3.6V | 5.5 | 10.4 | 20.8 | kΩ |
| | | | $V_{IN}$ = 2.3V to 2.7V | 4.1 | 7.8 | 15.7 | kΩ |
| | | | $V_{IN}$ = 1.7V to 1.9V | 3.0 | 5.7 | 11.1 | kΩ |
| | | | $V_{IN}$ = 1.4V to 1.6V | 2.7 | 5.1 | 9.6 | kΩ |
| | | | $V_{IN}$ = 1.14V to 1.26V | 2.4 | 4.5 | 8.1 | kΩ |
| | | $V_{CCAUX}$ = 2.25V to 2.75V | $V_{IN}$ = 3.0V to 3.6V | 7.9 | 16.0 | 35.0 | kΩ |
| | | | $V_{IN}$ = 2.3V to 2.7V | 5.9 | 12.0 | 26.3 | kΩ |
| | | | $V_{IN}$ = 1.7V to 1.9V | 4.2 | 8.5 | 18.6 | kΩ |
| | | | $V_{IN}$ = 1.4V to 1.6V | 3.6 | 7.2 | 15.7 | kΩ |
| | | | $V_{IN}$ = 1.14V to 1.26V | 3.0 | 6.0 | 12.5 | kΩ |
| $I_{REF}$ | $V_{REF}$ current per pin | All $V_{CCO}$ levels | | –10 | – | +10 | µA |
| $C_{IN}$ | Input capacitance | – | | – | – | 10 | pF |
| $R_{DT}$ | Resistance of optional differential termination circuit within a differential I/O pair. Not available on Input-only pairs. | $V_{CCO}$ = 3.3V ± 10% | LVDS_33, MINI_LVDS_33, RSDS_33 | 90 | 100 | 115 | Ω |
| | | $V_{CCO}$ = 2.5V ± 10% | LVDS_25, MINI_LVDS_25, RSDS_25 | 90 | 110 | – | Ω |

**Notes:**

1. The numbers in this table are based on the conditions set forth in Table 8.
2. For single-ended signals that are placed on a differential-capable I/O, $V_{IN}$ of –0.2V to –0.5V is supported but can cause increased leakage between the two pins. See "Parasitic Leakage" in UG331, *Spartan-3 Generation FPGA User Guide*.
3. This parameter is based on characterization. The pull-up resistance $R_{PU}$ = $V_{CCO}$ / $I_{RPU}$. The pull-down resistance $R_{PD}$ = $V_{IN}$ / $I_{RPD}$.

## Quiescent Current Requirements

*Table 10:* **Quiescent Supply Current Characteristics**

| Symbol | Description | Device | Typical(2) | Commercial Maximum(2) | Industrial Maximum(2) | Units |
|---|---|---|---|---|---|---|
| $I_{CCINTQ}$ | Quiescent $V_{CCINT}$ supply current | XC3S50A | 2 | 20 | 30 | mA |
| | | XC3S200A | 7 | 50 | 70 | mA |
| | | XC3S400A | 10 | 85 | 125 | mA |
| | | XC3S700A | 13 | 120 | 185 | mA |
| | | XC3S1400A | 24 | 220 | 310 | mA |
| $I_{CCOQ}$ | Quiescent $V_{CCO}$ supply current | XC3S50A | 0.2 | 2 | 3 | mA |
| | | XC3S200A | 0.2 | 2 | 3 | mA |
| | | XC3S400A | 0.3 | 3 | 4 | mA |
| | | XC3S700A | 0.3 | 3 | 4 | mA |
| | | XC3S1400A | 0.3 | 3 | 4 | mA |
| $I_{CCAUXQ}$ | Quiescent $V_{CCAUX}$ supply current | XC3S50A | 3 | 8 | 10 | mA |
| | | XC3S200A | 5 | 12 | 15 | mA |
| | | XC3S400A | 5 | 18 | 24 | mA |
| | | XC3S700A | 6 | 28 | 34 | mA |
| | | XC3S1400A | 10 | 50 | 58 | mA |

**Notes:**

1. The numbers in this table are based on the conditions set forth in Table 8.
2. Quiescent supply current is measured with all I/O drivers in a high-impedance state and with all pull-up/pull-down resistors at the I/O pads disabled. Typical values are characterized using typical devices at room temperature ($T_J$ of 25°C at $V_{CCINT}$ = 1.2V, $V_{CCO}$ = 3.3V, and $V_{CCAUX}$ = 2.5V). The maximum limits are tested for each device at the respective maximum specified junction temperature and at maximum voltage limits with $V_{CCINT}$ = 1.26V, $V_{CCO}$ = 3.6V, and $V_{CCAUX}$ = 3.6V. The FPGA is programmed with a “blank” configuration data file (that is, a design with no functional elements instantiated). For conditions other than those described above (for example, a design including functional elements), measured quiescent current levels will be different than the values in the table.
3. For more accurate estimates for a specific design, use the Xilinx XPower tools. There are two recommended ways to estimate the total power consumption (quiescent plus dynamic) for a specific design: a) The Spartan-3A FPGA XPower Estimator provides quick, approximate, typical estimates, and does not require a netlist of the design. b) XPower Analyzer uses a netlist as input to provide maximum estimates as well as more accurate typical estimates.
4. The maximum numbers in this table indicate the minimum current each power rail requires in order for the FPGA to power-on successfully.
5. For information on the power-saving Suspend mode, see XAPP480: *Using Suspend Mode in Spartan-3 Generation FPGAs*. Suspend mode typically saves 40% total power consumption compared to quiescent current.

## Single-Ended I/O Standards

*Table 11:* **Recommended Operating Conditions for User I/Os Using Single-Ended Standards**

| IOSTANDARD Attribute | $V_{CCO}$ for Drivers(2) | | | $V_{REF}$ | | | $V_{IL}$ | $V_{IH}$ |
|---|---|---|---|---|---|---|---|---|
| | Min (V) | Nom (V) | Max (V) | Min (V) | Nom (V) | Max (V) | Max (V) | Min (V) |
| LVTTL | 3.0 | 3.3 | 3.6 | $V_{REF}$ is not used for these I/O standards | | | 0.8 | 2.0 |
| LVCMOS33(4) | 3.0 | 3.3 | 3.6 | | | | 0.8 | 2.0 |
| LVCMOS25(4,5) | 2.3 | 2.5 | 2.7 | | | | 0.7 | 1.7 |
| LVCMOS18 | 1.65 | 1.8 | 1.95 | | | | 0.4 | 0.8 |
| LVCMOS15 | 1.4 | 1.5 | 1.6 | | | | 0.4 | 0.8 |
| LVCMOS12 | 1.1 | 1.2 | 1.3 | | | | 0.4 | 0.7 |
| PCI33_3(6) | 3.0 | 3.3 | 3.6 | | | | $0.3 \bullet V_{CCO}$ | $0.5 \bullet V_{CCO}$ |
| PCI66_3(6) | 3.0 | 3.3 | 3.6 | | | | $0.3 \bullet V_{CCO}$ | $0.5 \bullet V_{CCO}$ |
| HSTL_I | 1.4 | 1.5 | 1.6 | 0.68 | 0.75 | 0.9 | $V_{REF} - 0.1$ | $V_{REF} + 0.1$ |
| HSTL_III | 1.4 | 1.5 | 1.6 | – | 0.9 | - | $V_{REF} - 0.1$ | $V_{REF} + 0.1$ |
| HSTL_I_18 | 1.7 | 1.8 | 1.9 | 0.8 | 0.9 | 1.1 | $V_{REF} - 0.1$ | $V_{REF} + 0.1$ |
| HSTL_II_18 | 1.7 | 1.8 | 1.9 | – | 0.9 | – | $V_{REF} - 0.1$ | $V_{REF} + 0.1$ |
| HSTL_III_18 | 1.7 | 1.8 | 1.9 | – | 1.1 | – | $V_{REF} - 0.1$ | $V_{REF} + 0.1$ |
| SSTL18_I | 1.7 | 1.8 | 1.9 | 0.833 | 0.900 | 0.969 | $V_{REF} - 0.125$ | $V_{REF} + 0.125$ |
| SSTL18_II | 1.7 | 1.8 | 1.9 | 0.833 | 0.900 | 0.969 | $V_{REF} - 0.125$ | $V_{REF} + 0.125$ |
| SSTL2_I | 2.3 | 2.5 | 2.7 | 1.13 | 1.25 | 1.38 | $V_{REF} - 0.150$ | $V_{REF} + 0.150$ |
| SSTL2_II | 2.3 | 2.5 | 2.7 | 1.13 | 1.25 | 1.38 | $V_{REF} - 0.150$ | $V_{REF} + 0.150$ |
| SSTL3_I | 3.0 | 3.3 | 3.6 | 1.3 | 1.5 | 1.7 | $V_{REF} - 0.2$ | $V_{REF} + 0.2$ |
| SSTL3_II | 3.0 | 3.3 | 3.6 | 1.3 | 1.5 | 1.7 | $V_{REF} - 0.2$ | $V_{REF} + 0.2$ |

**Notes:**

1. Descriptions of the symbols used in this table are as follows:
   $V_{CCO}$ – the supply voltage for output drivers
   $V_{REF}$ – the reference voltage for setting the input switching threshold
   $V_{IL}$ – the input voltage that indicates a Low logic level
   $V_{IH}$ – the input voltage that indicates a High logic level
2. In general, the $V_{CCO}$ rails supply only output drivers, not input circuits. The exceptions are for LVCMOS25 inputs when $V_{CCAUX}$ = 3.3V range and for PCI I/O standards.
3. For device operation, the maximum signal voltage ($V_{IH}$ max) can be as high as $V_{IN}$ max. See Table 8.
4. There is approximately 100 mV of hysteresis on inputs using LVCMOS33 and LVCMOS25 I/O standards.
5. All Dedicated pins (PROG_B, DONE, SUSPEND, TCK, TDI, TDO, and TMS) draw power from the $V_{CCAUX}$ rail and use the LVCMOS25 or LVCMOS33 standard depending on $V_{CCAUX}$. The dual-purpose configuration pins use the LVCMOS standard before the User mode. When using these pins as part of a standard 2.5V configuration interface, apply 2.5V to the $V_{CCO}$ lines of Banks 0, 1, and 2 at power-on as well as throughout configuration.
6. For information on PCI IP solutions, see www.xilinx.com/pci. The PCI IOSTANDARD is not supported on input-only pins. The PCIX IOSTANDARD is available and has equivalent characteristics but no PCI-X IP is supported.

*Table 12:* **DC Characteristics of User I/Os Using Single-Ended Standards**

| IOSTANDARD Attribute | | Test Conditions | | Logic Level Characteristics | |
|---|---|---|---|---|---|
| | | $I_{OL}$ (mA) | $I_{OH}$ (mA) | $V_{OL}$ Max (V) | $V_{OH}$ Min (V) |
| LVTTL(3) | 2 | 2 | –2 | 0.4 | 2.4 |
| | 4 | 4 | –4 | | |
| | 6 | 6 | –6 | | |
| | 8 | 8 | –8 | | |
| | 12 | 12 | –12 | | |
| | 16 | 16 | –16 | | |
| | 24 | 24 | –24 | | |
| LVCMOS33(3) | 2 | 2 | –2 | 0.4 | $V_{CCO}$ – 0.4 |
| | 4 | 4 | –4 | | |
| | 6 | 6 | –6 | | |
| | 8 | 8 | –8 | | |
| | 12 | 12 | –12 | | |
| | 16 | 16 | –16 | | |
| | 24(4) | 24 | –24 | | |
| LVCMOS25(3) | 2 | 2 | –2 | 0.4 | $V_{CCO}$ – 0.4 |
| | 4 | 4 | –4 | | |
| | 6 | 6 | –6 | | |
| | 8 | 8 | –8 | | |
| | 12 | 12 | –12 | | |
| | 16(4) | 16 | –16 | | |
| | 24(4) | 24 | –24 | | |
| LVCMOS18(3) | 2 | 2 | –2 | 0.4 | $V_{CCO}$ – 0.4 |
| | 4 | 4 | –4 | | |
| | 6 | 6 | –6 | | |
| | 8 | 8 | –8 | | |
| | 12(4) | 12 | –12 | | |
| | 16(4) | 16 | –16 | | |
| LVCMOS15(3) | 2 | 2 | –2 | 0.4 | $V_{CCO}$ – 0.4 |
| | 4 | 4 | –4 | | |
| | 6 | 6 | –6 | | |
| | 8(4) | 8 | –8 | | |
| | 12(4) | 12 | –12 | | |
| LVCMOS12(3) | 2 | 2 | –2 | 0.4 | $V_{CCO}$ – 0.4 |
| | 4(4) | 4 | –4 | | |
| | 6(4) | 6 | –6 | | |

*Table 12:* **DC Characteristics of User I/Os Using Single-Ended Standards*(Continued)***

| IOSTANDARD Attribute | Test Conditions | | Logic Level Characteristics | |
|---|---|---|---|---|
| | $I_{OL}$ (mA) | $I_{OH}$ (mA) | $V_{OL}$ Max (V) | $V_{OH}$ Min (V) |
| PCI33_3(5) | 1.5 | –0.5 | 10% $V_{CCO}$ | 90% $V_{CCO}$ |
| PCI66_3(5) | 1.5 | –0.5 | 10% $V_{CCO}$ | 90% $V_{CCO}$ |
| HSTL_I(4) | 8 | –8 | 0.4 | $V_{CCO}$ - 0.4 |
| HSTL_III(4) | 24 | –8 | 0.4 | $V_{CCO}$ - 0.4 |
| HSTL_I_18 | 8 | –8 | 0.4 | $V_{CCO}$ - 0.4 |
| HSTL_II_18(4) | 16 | –16 | 0.4 | $V_{CCO}$ - 0.4 |
| HSTL_III_18 | 24 | –8 | 0.4 | $V_{CCO}$ - 0.4 |
| SSTL18_I | 6.7 | –6.7 | $V_{TT}$ – 0.475 | $V_{TT}$ + 0.475 |
| SSTL18_II(4) | 13.4 | –13.4 | $V_{TT}$ – 0.603 | $V_{TT}$ + 0.603 |
| SSTL2_I | 8.1 | –8.1 | $V_{TT}$ – 0.61 | $V_{TT}$ + 0.61 |
| SSTL2_II(4) | 16.2 | –16.2 | $V_{TT}$ – 0.81 | $V_{TT}$ + 0.81 |
| SSTL3_I | 8 | –8 | $V_{TT}$ – 0.6 | $V_{TT}$ + 0.6 |
| SSTL3_II | 16 | –16 | $V_{TT}$ – 0.8 | $V_{TT}$ + 0.8 |

**Notes:**

1. The numbers in this table are based on the conditions set forth in Table 8 and Table 11.
2. Descriptions of the symbols used in this table are as follows:
   $I_{OL}$ — the output current condition under which $V_{OL}$ is tested
   $I_{OH}$ — the output current condition under which $V_{OH}$ is tested
   $V_{OL}$ — the output voltage that indicates a Low logic level
   $V_{OH}$ — the output voltage that indicates a High logic level
   $V_{CCO}$ — the supply voltage for output drivers
   $V_{TT}$ — the voltage applied to a resistor termination
3. For the LVCMOS and LVTTL standards: the same $V_{OL}$ and $V_{OH}$ limits apply for the Fast, Slow, and QUIETIO slew attributes.
4. These higher-drive output standards are supported only on FPGA banks 1 and 3. Inputs are unrestricted. See the chapter "Using I/O Resources" in UG331.
5. Tested according to the relevant PCI specifications. For information on PCI IP solutions, see www.xilinx.com/pci. The PCIX IOSTANDARD is available and has equivalent characteristics but no PCI-X IP is supported.

# Differential I/O Standards

## Differential Input Pairs

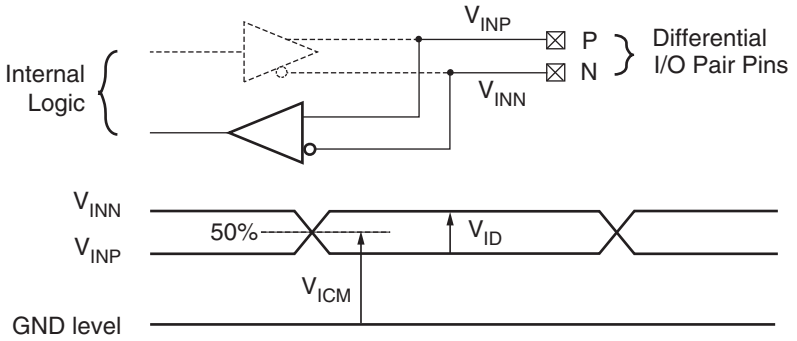


$$V_{ICM} = \text{Input common mode voltage} = \frac{V_{INP} + V_{INN}}{2}$$

$$V_{ID} = \text{Differential input voltage} = \left| V_{INP} - V_{INN} \right|$$

DS529-3_10_012907

*Figure 4:* **Differential Input Voltages**

*Table 13:* **Recommended Operating Conditions for User I/Os Using Differential Signal Standards**

| IOSTANDARD Attribute | $V_{CCO}$ for Drivers(1) | | | $V_{ID}$ | | | $V_{ICM}$(2) | | |
|---|---|---|---|---|---|---|---|---|---|
| | Min (V) | Nom (V) | Max (V) | Min (mV) | Nom (mV) | Max (mV) | Min (V) | Nom (V) | Max (V) |
| LVDS_25(3) | 2.25 | 2.5 | 2.75 | 100 | 350 | 600 | 0.3 | 1.25 | 2.35 |
| LVDS_33(3) | 3.0 | 3.3 | 3.6 | 100 | 350 | 600 | 0.3 | 1.25 | 2.35 |
| BLVDS_25(4) | 2.25 | 2.5 | 2.75 | 100 | 300 | – | 0.3 | 1.3 | 2.35 |
| MINI_LVDS_25(3) | 2.25 | 2.5 | 2.75 | 200 | – | 600 | 0.3 | 1.2 | 1.95 |
| MINI_LVDS_33(3) | 3.0 | 3.3 | 3.6 | 200 | – | 600 | 0.3 | 1.2 | 1.95 |
| LVPECL_25(5) | Inputs Only | | | 100 | 800 | 1000 | 0.3 | 1.2 | 1.95 |
| LVPECL_33(5) | Inputs Only | | | 100 | 800 | 1000 | 0.3 | 1.2 | 2.8(6) |
| RSDS_25(3) | 2.25 | 2.5 | 2.75 | 100 | 200 | – | 0.3 | 1.2 | 1.5 |
| RSDS_33(3) | 3.0 | 3.3 | 3.6 | 100 | 200 | – | 0.3 | 1.2 | 1.5 |
| TMDS_33(3, 4, 7) | 3.14 | 3.3 | 3.47 | 150 | – | 1200 | 2.7 | – | 3.23 |
| PPDS_25(3) | 2.25 | 2.5 | 2.75 | 100 | – | 400 | 0.2 | – | 2.3 |
| PPDS_33(3) | 3.0 | 3.3 | 3.6 | 100 | – | 400 | 0.2 | – | 2.3 |
| DIFF_HSTL_I_18 | 1.7 | 1.8 | 1.9 | 100 | – | – | 0.8 | – | 1.1 |
| DIFF_HSTL_II_18(8) | 1.7 | 1.8 | 1.9 | 100 | – | – | 0.8 | – | 1.1 |
| DIFF_HSTL_III_18 | 1.7 | 1.8 | 1.9 | 100 | – | – | 0.8 | – | 1.1 |
| DIFF_HSTL_I | 1.4 | 1.5 | 1.6 | 100 | – | – | 0.68 | | 0.9 |
| DIFF_HSTL_III | 1.4 | 1.5 | 1.6 | 100 | – | – | – | 0.9 | – |
| DIFF_SSTL18_I | 1.7 | 1.8 | 1.9 | 100 | – | – | 0.7 | – | 1.1 |
| DIFF_SSTL18_II(8) | 1.7 | 1.8 | 1.9 | 100 | – | – | 0.7 | – | 1.1 |
| DIFF_SSTL2_I | 2.3 | 2.5 | 2.7 | 100 | – | – | 1.0 | – | 1.5 |
| DIFF_SSTL2_II(8) | 2.3 | 2.5 | 2.7 | 100 | – | – | 1.0 | – | 1.5 |
| DIFF_SSTL3_I | 3.0 | 3.3 | 3.6 | 100 | – | – | 1.1 | – | 1.9 |
| DIFF_SSTL3_II | 3.0 | 3.3 | 3.6 | 100 | – | – | 1.1 | – | 1.9 |

**Notes:**

1. The $V_{CCO}$ rails supply only differential output drivers, not input circuits.
2. $V_{ICM}$ must be less than $V_{CCAUX}$.
3. These true differential output standards are supported only on FPGA banks 0 and 2. Inputs are unrestricted. See the chapter "Using I/O Resources" in UG331.
4. See "External Termination Requirements for Differential I/O," page 20.
5. LVPECL is supported on inputs only, not outputs. LVPECL_33 requires $V_{CCAUX}$=3.3V ± 10%.
6. LVPECL_33 maximum $V_{ICM}$ = the lower of 2.8V or $V_{CCAUX} - (V_{ID} / 2)$
7. Requires $V_{CCAUX}$ = 3.3V ± 10% for inputs. ($V_{CCAUX}$ – 300 mV) ≤ $V_{ICM}$ ≤ ($V_{CCAUX}$ – 37 mV)
8. These higher-drive output standards are supported only on FPGA banks 1 and 3. Inputs are unrestricted. See the chapter "Using I/O Resources" in UG331.
9. All standards except for LVPECL and TMDS can have $V_{CCAUX}$ at either 2.5V or 3.3V. Define your $V_{CCAUX}$ level using the CONFIG VCCAUX constraint.

## Differential Output Pairs

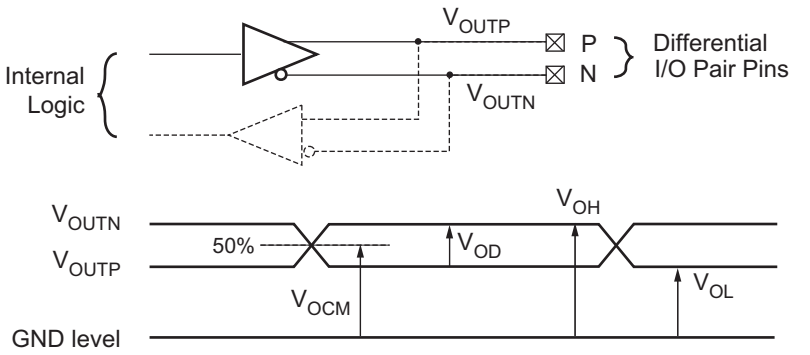


$$V_{OCM} = \text{Output common mode voltage} = \frac{V_{OUTP} + V_{OUTN}}{2}$$

$$V_{OD} = \text{Output differential voltage} = \left|V_{OUTP} - V_{OUTN}\right|$$

$V_{OH}$ = Output voltage indicating a High logic level

$V_{OL}$ = Output voltage indicating a Low logic level

DS529-3_11_012907

*Figure 5:* **Differential Output Voltages**

*Table 14:* **DC Characteristics of User I/Os Using Differential Signal Standards**

| | $V_{OD}$ | | | $V_{OCM}$ | | | $V_{OH}$ | $V_{OL}$ |
|---|---|---|---|---|---|---|---|---|
| **IOSTANDARD Attribute** | **Min (mV)** | **Typ (mV)** | **Max (mV)** | **Min (V)** | **Typ (V)** | **Max (V)** | **Min (V)** | **Max (V)** |
| LVDS_25 | 247 | 350 | 454 | 1.125 | – | 1.375 | – | – |
| LVDS_33 | 247 | 350 | 454 | 1.125 | – | 1.375 | – | – |
| BLVDS_25 | 240 | 350 | 460 | – | 1.30 | – | – | – |
| MINI_LVDS_25 | 300 | – | 600 | 1.0 | – | 1.4 | – | – |
| MINI_LVDS_33 | 300 | – | 600 | 1.0 | – | 1.4 | – | – |
| RSDS_25 | 100 | – | 400 | 1.0 | – | 1.4 | – | – |
| RSDS_33 | 100 | – | 400 | 1.0 | – | 1.4 | – | – |
| TMDS_33 | 400 | – | 800 | $V_{CCO}$ – 0.405 | – | $V_{CCO}$ – 0.190 | – | – |
| PPDS_25 | 100 | – | 400 | 0.5 | 0.8 | 1.4 | – | – |
| PPDS_33 | 100 | – | 400 | 0.5 | 0.8 | 1.4 | – | – |
| DIFF_HSTL_I_18 | – | – | – | – | – | – | $V_{CCO}$ – 0.4 | 0.4 |
| DIFF_HSTL_II_18 | – | – | – | – | – | – | $V_{CCO}$ – 0.4 | 0.4 |
| DIFF_HSTL_III_18 | – | – | – | – | – | – | $V_{CCO}$ – 0.4 | 0.4 |
| DIFF_HSTL_I | – | – | – | – | – | – | $V_{CCO}$ – 0.4 | 0.4 |
| DIFF_HSTL_III | – | – | – | – | – | – | $V_{CCO}$ – 0.4 | 0.4 |
| DIFF_SSTL18_I | – | – | – | – | – | – | $V_{TT}$ + 0.475 | $V_{TT}$ – 0.475 |
| DIFF_SSTL18_II | – | – | – | – | – | – | $V_{TT}$ + 0.603 | $V_{TT}$ – 0.603 |
| DIFF_SSTL2_I | – | – | – | – | – | – | $V_{TT}$ + 0.61 | $V_{TT}$ – 0.61 |
| DIFF_SSTL2_II | – | – | – | – | – | – | $V_{TT}$ + 0.81 | $V_{TT}$ – 0.81 |
| DIFF_SSTL3_I | – | – | – | – | – | – | $V_{TT}$ + 0.6 | $V_{TT}$ – 0.6 |
| DIFF_SSTL3_II | – | – | – | – | – | – | $V_{TT}$ + 0.8 | $V_{TT}$ – 0.8 |

**Notes:**

1. The numbers in this table are based on the conditions set forth in Table 8 and Table 13.
2. See "External Termination Requirements for Differential I/O," page 20.
3. Output voltage measurements for all differential standards are made with a termination resistor ($R_T$) of 100Ω across the N and P pins of the differential signal pair.
4. At any given time, no more than two of the following differential output standards can be assigned to an I/O bank: LVDS_25, RSDS_25, MINI_LVDS_25, PPDS_25 when $V_{CCO}$=2.5V, or LVDS_33, RSDS_33, MINI_LVDS_33, TMDS_33, PPDS_33 when $V_{CCO}$ = 3.3V

## External Termination Requirements for Differential I/O

### *LVDS, RSDS, MINI_LVDS, and PPDS I/O Standards*

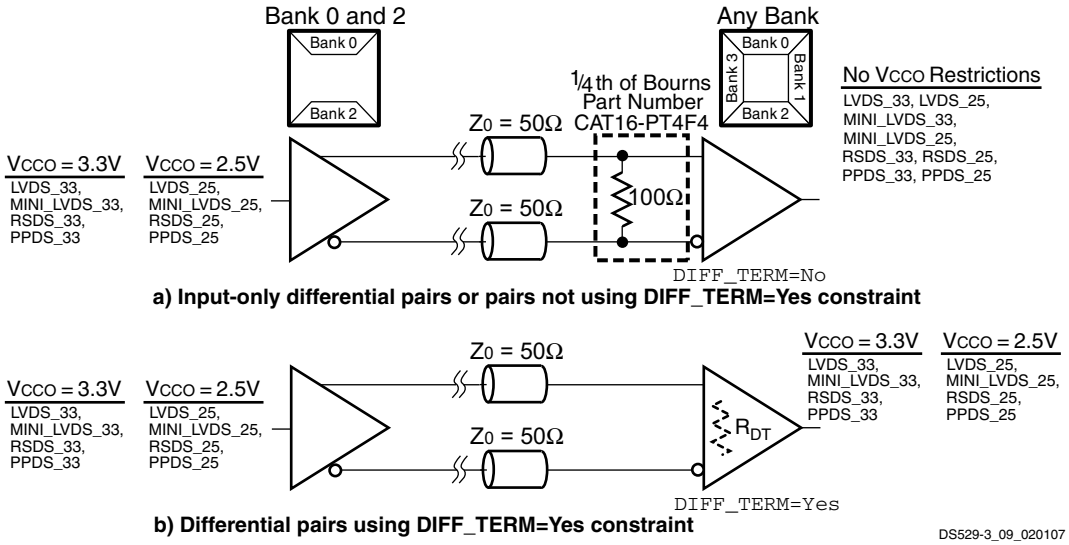


*Figure 6:* **External Input Termination for LVDS, RSDS, MINI_LVDS, and PPDS I/O Standards**

### *BLVDS_25 I/O Standard*

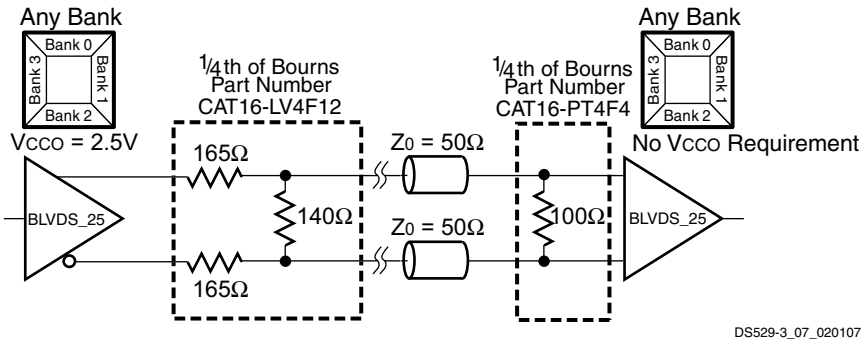


*Figure 7:* **External Output and Input Termination Resistors for BLVDS_25 I/O Standard**

### *TMDS_33 I/O Standard*

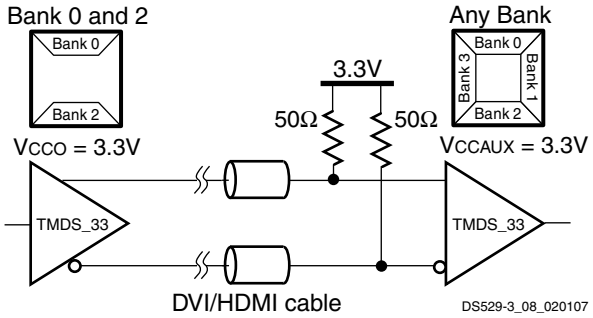


*Figure 8:* **External Input Resistors Required for TMDS_33 I/O Standard**

## Device DNA Read Endurance

*Table 15:* **Device DNA Identifier Memory Characteristics**

| Symbol | Description | Minimum | Units |
|---|---|---|---|
| DNA_CYCLES | Number of READ operations or JTAG ISC_DNA read operations. Unaffected by HOLD or SHIFT operations. | 30,000,000 | Read cycles |

## Switching Characteristics

All Spartan-3A FPGAs ship in two speed grades: –4 and the higher performance –5. Switching characteristics in this document are designated as Advance, Preliminary, or Production, as shown in Table 16. Each category is defined as follows:

**Advance**: These specifications are based on simulations only and are typically available soon after establishing FPGA specifications. Although speed grades with this designation are considered relatively stable and conservative, some under-reporting might still occur.

**Preliminary**: These specifications are based on complete early silicon characterization. Devices and speed grades with this designation are intended to give a better indication of the expected performance of production silicon. The probability of under-reporting preliminary delays is greatly reduced compared to Advance data.

**Production**: These specifications are approved once enough production silicon of a particular device has been characterized to provide full correlation between speed files and devices over numerous production lots. There is no under-reporting of delays, and customers receive formal notification of any subsequent changes. Typically, the slowest speed grades transition to Production before faster speed grades.

### Software Version Requirements

Production-quality systems must use FPGA designs compiled using a speed file designated as PRODUCTION status. FPGA designs using a less mature speed file designation should only be used during system prototyping or pre-production qualification. FPGA designs with speed files designated as Advance or Preliminary should not be used in a production-quality system.

Whenever a speed file designation changes, as a device matures toward Production status, rerun the latest Xilinx® ISE® software on the FPGA design to ensure that the FPGA design incorporates the latest timing information and software updates.

All parameter limits are representative of worst-case supply voltage and junction temperature conditions. **Unless otherwise noted, the published parameter values apply to all Spartan-3A devices. AC and DC characteristics are specified using the same numbers for both commercial and industrial grades.**

To create a Xilinx user account and sign up for automatic E-mail notification whenever this data sheet is updated:

- **Sign Up for Alerts**
  www.xilinx.com/support/answers/18683.htm

Timing parameters and their representative values are selected for inclusion below either because they are important as general design requirements or they indicate fundamental device performance characteristics. The Spartan-3A FPGA speed files (v1.41), part of the Xilinx Development Software, are the original source for many but not all of the values. The speed grade designations for these files are shown in Table 16. For more complete, more precise, and worst-case data, use the values reported by the Xilinx static timing analyzer (TRACE in the Xilinx development software) and back-annotated to the simulation netlist.

*Table 16:* **Spartan-3A v1.41 Speed Grade Designation**

| Device | Advance | Preliminary | Production |
|---|---|---|---|
| XC3S50A | | | -4, -5 |
| XC3S200A | | | -4, -5 |
| XC3S400A | | | -4, -5 |
| XC3S700A | | | -4, -5 |
| XC3S1400A | | | -4, -5 |

Table 17 provides the recent history of the Spartan-3A FPGA speed files.

*Table 17:* **Spartan-3A Speed File Version History**

| Version | ISE Release | Description |
|---|---|---|
| 1.41 | ISE 10.1.03 | Updated Automotive output delays |
| 1.40 | ISE 10.1.02 | Updated Automotive input delays. |
| 1.39 | ISE 10.1.01 | Added Automotive parts. |
| 1.38 | ISE 9.2.03i | Added Absolute Minimum values. |
| 1.37 | ISE 9.2.01i | Updated pin-to-pin setup and hold times (Table 19), TMDS output adjustment (Table 26) multiplier setup/hold times (Table 34), and block RAM clock width (Table 35). |
| 1.36 | ISE 9.2i; previously available via Answer Record AR24992 | XC3S400A, all speed grades and all temperature grades, upgraded to Production |
| 1.35 | Answer Record AR24992 | XC3S50A, XC3S200A, XC3S700A, XC3S1400A, all speed grades and all temperature grades, upgraded to Production. |
| 1.34 | ISE 9.1.03i | XC3S700A and XC3S1400A -4 speed grade upgraded to Production. Updated pin-to-pin timing numbers. |

# I/O Timing

## Pin-to-Pin Clock-to-Output Times

*Table 18:* **Pin-to-Pin Clock-to-Output Times for the IOB Output Path**

| Symbol | Description | Conditions | Device | Speed Grade -5 Max | Speed Grade -4 Max | Units |
|---|---|---|---|---|---|---|
| **Clock-to-Output Times** | | | | | | |
| $T_{ICKOFDCM}$ | When reading from the Output Flip-Flop (OFF), the time from the active transition on the Global Clock pin to data appearing at the Output pin. The DCM is in use. | LVCMOS25(2), 12mA output drive, Fast slew rate, with DCM(3) | XC3S50A | 3.18 | 3.42 | ns |
| | | | XC3S200A | 3.21 | 3.27 | ns |
| | | | XC3S400A | 2.97 | 3.33 | ns |
| | | | XC3S700A | 3.39 | 3.50 | ns |
| | | | XC3S1400A | 3.51 | 3.99 | ns |
| $T_{ICKOF}$ | When reading from OFF, the time from the active transition on the Global Clock pin to data appearing at the Output pin. The DCM is not in use. | LVCMOS25(2), 12mA output drive, Fast slew rate, without DCM | XC3S50A | 4.59 | 5.02 | ns |
| | | | XC3S200A | 4.88 | 5.24 | ns |
| | | | XC3S400A | 4.68 | 5.12 | ns |
| | | | XC3S700A | 4.97 | 5.34 | ns |
| | | | XC3S1400A | 5.06 | 5.69 | ns |

**Notes:**

1. The numbers in this table are tested using the methodology presented in Table 27 and are based on the operating conditions set forth in Table 8 and Table 11.
2. This clock-to-output time requires adjustment whenever a signal standard other than LVCMOS25 is assigned to the Global Clock Input or a standard other than LVCMOS25 with 12 mA drive and Fast slew rate is assigned to the data Output. If the former is true, *add* the appropriate Input adjustment from Table 23. If the latter is true, *add* the appropriate Output adjustment from Table 26.
3. DCM output jitter is included in all measurements.

## Pin-to-Pin Setup and Hold Times

*Table 19:* **Pin-to-Pin Setup and Hold Times for the IOB Input Path (System Synchronous)**

| Symbol | Description | Conditions | Device | Speed Grade -5 Min | Speed Grade -4 Min | Units |
|---|---|---|---|---|---|---|
| **Setup Times** | | | | | | |
| $T_{PSDCM}$ | When writing to the Input Flip-Flop (IFF), the time from the setup of data at the Input pin to the active transition at a Global Clock pin. The DCM is in use. No Input Delay is programmed. | LVCMOS25(2), IFD_DELAY_VALUE = 0, with DCM(4) | XC3S50A | 2.45 | 2.68 | ns |
| | | | XC3S200A | 2.59 | 2.84 | ns |
| | | | XC3S400A | 2.38 | 2.68 | ns |
| | | | XC3S700A | 2.38 | 2.57 | ns |
| | | | XC3S1400A | 1.91 | 2.17 | ns |
| $T_{PSFD}$ | When writing to IFF, the time from the setup of data at the Input pin to an active transition at the Global Clock pin. The DCM is not in use. The Input Delay is programmed. | LVCMOS25(2), IFD_DELAY_VALUE = 5, without DCM | XC3S50A | 2.55 | 2.76 | ns |
| | | | XC3S200A | 2.32 | 2.76 | ns |
| | | | XC3S400A | 2.21 | 2.60 | ns |
| | | | XC3S700A | 2.28 | 2.63 | ns |
| | | | XC3S1400A | 2.33 | 2.41 | ns |
| **Hold Times** | | | | | | |
| $T_{PHDCM}$ | When writing to IFF, the time from the active transition at the Global Clock pin to the point when data must be held at the Input pin. The DCM is in use. No Input Delay is programmed. | LVCMOS25(3), IFD_DELAY_VALUE = 0, with DCM(4) | XC3S50A | -0.36 | -0.36 | ns |
| | | | XC3S200A | -0.52 | -0.52 | ns |
| | | | XC3S400A | -0.33 | -0.29 | ns |
| | | | XC3S700A | -0.17 | -0.12 | ns |
| | | | XC3S1400A | -0.07 | 0.00 | ns |
| $T_{PHFD}$ | When writing to IFF, the time from the active transition at the Global Clock pin to the point when data must be held at the Input pin. The DCM is not in use. The Input Delay is programmed. | LVCMOS25(3), IFD_DELAY_VALUE = 5, without DCM | XC3S50A | -0.63 | -0.58 | ns |
| | | | XC3S200A | -0.56 | -0.56 | ns |
| | | | XC3S400A | -0.42 | -0.42 | ns |
| | | | XC3S700A | -0.80 | -0.75 | ns |
| | | | XC3S1400A | -0.69 | -0.69 | ns |

**Notes:**

1. The numbers in this table are tested using the methodology presented in Table 27 and are based on the operating conditions set forth in Table 8 and Table 11.
2. This setup time requires adjustment whenever a signal standard other than LVCMOS25 is assigned to the Global Clock Input or the data Input. If this is true of the Global Clock Input, subtract the appropriate adjustment from Table 23. If this is true of the data Input, add the appropriate Input adjustment from the same table.
3. This hold time requires adjustment whenever a signal standard other than LVCMOS25 is assigned to the Global Clock Input or the data Input. If this is true of the Global Clock Input, add the appropriate Input adjustment from Table 23. If this is true of the data Input, subtract the appropriate Input adjustment from the same table. When the hold time is negative, it is possible to change the data before the clock's active edge.
4. DCM output jitter is included in all measurements.

## Input Setup and Hold Times

*Table 20:* **Setup and Hold Times for the IOB Input Path**

| Symbol | Description | Conditions | IFD_ DELAY_ VALUE | Device | Speed Grade -5 Min | Speed Grade -4 Min | Units |
|---|---|---|---|---|---|---|---|
| **Setup Times** | | | | | | | |
| $T_{IOPICK}$ | Time from the setup of data at the Input pin to the active transition at the ICLK input of the Input Flip-Flop (IFF). No Input Delay is programmed. | LVCMOS25(2) | 0 | XC3S50A | 1.56 | 1.58 | ns |
| | | | | XC3S200A | 1.71 | 1.81 | ns |
| | | | | XC3S400A | 1.30 | 1.51 | ns |
| | | | | XC3S700A | 1.34 | 1.51 | ns |
| | | | | XC3S1400A | 1.36 | 1.74 | ns |
| $T_{IOPICKD}$ | Time from the setup of data at the Input pin to the active transition at the ICLK input of the Input Flip-Flop (IFF). The Input Delay is programmed. | LVCMOS25(2) | 1 | XC3S50A | 2.16 | 2.18 | ns |
| | | | 2 | | 3.10 | 3.12 | ns |
| | | | 3 | | 3.51 | 3.76 | ns |
| | | | 4 | | 4.04 | 4.32 | ns |
| | | | 5 | | 3.88 | 4.24 | ns |
| | | | 6 | | 4.72 | 5.09 | ns |
| | | | 7 | | 5.47 | 5.94 | ns |
| | | | 8 | | 5.97 | 6.52 | ns |
| | | | 1 | XC3S200A | 2.05 | 2.20 | ns |
| | | | 2 | | 2.72 | 2.93 | ns |
| | | | 3 | | 3.38 | 3.78 | ns |
| | | | 4 | | 3.88 | 4.37 | ns |
| | | | 5 | | 3.69 | 4.20 | ns |
| | | | 6 | | 4.56 | 5.23 | ns |
| | | | 7 | | 5.34 | 6.11 | ns |
| | | | 8 | | 5.85 | 6.71 | ns |
| | | | 1 | XC3S400A | 1.79 | 2.02 | ns |
| | | | 2 | | 2.43 | 2.67 | ns |
| | | | 3 | | 3.02 | 3.43 | ns |
| | | | 4 | | 3.49 | 3.96 | ns |
| | | | 5 | | 3.41 | 3.95 | ns |
| | | | 6 | | 4.20 | 4.81 | ns |
| | | | 7 | | 4.96 | 5.66 | ns |
| | | | 8 | | 5.44 | 6.19 | ns |

*Table 20:* **Setup and Hold Times for the IOB Input Path*(Continued)***

| Symbol | Description | Conditions | IFD_ DELAY_ VALUE | Device | Speed Grade -5 Min | Speed Grade -4 Min | Units |
|---|---|---|---|---|---|---|---|
| $T_{IOPICKD}$ | Time from the setup of data at the Input pin to the active transition at the ICLK input of the Input Flip-Flop (IFF). The Input Delay is programmed. | LVCMOS25(2) | 1 | XC3S700A | 1.82 | 1.95 | ns |
| | | | 2 | | 2.62 | 2.83 | ns |
| | | | 3 | | 3.32 | 3.72 | ns |
| | | | 4 | | 3.83 | 4.31 | ns |
| | | | 5 | | 3.69 | 4.14 | ns |
| | | | 6 | | 4.60 | 5.19 | ns |
| | | | 7 | | 5.39 | 6.10 | ns |
| | | | 8 | | 5.92 | 6.73 | ns |
| | | | 1 | XC3S1400A | 1.79 | 2.17 | ns |
| | | | 2 | | 2.55 | 2.92 | ns |
| | | | 3 | | 3.38 | 3.76 | ns |
| | | | 4 | | 3.75 | 4.32 | ns |
| | | | 5 | | 3.81 | 4.19 | ns |
| | | | 6 | | 4.39 | 5.09 | ns |
| | | | 7 | | 5.16 | 5.98 | ns |
| | | | 8 | | 5.69 | 6.57 | ns |
| **Hold Times** | | | | | | | |
| $T_{IOICKP}$ | Time from the active transition at the ICLK input of the Input Flip-Flop (IFF) to the point where data must be held at the Input pin. No Input Delay is programmed. | LVCMOS25(3) | 0 | XC3S50A | –0.66 | –0.64 | ns |
| | | | | XC3S200A | –0.85 | –0.65 | ns |
| | | | | XC3S400A | –0.42 | –0.42 | ns |
| | | | | XC3S700A | –0.81 | –0.67 | ns |
| | | | | XC3S1400A | –0.71 | –0.71 | ns |
| $T_{IOICKPD}$ | Time from the active transition at the ICLK input of the Input Flip-Flop (IFF) to the point where data must be held at the Input pin. The Input Delay is programmed. | LVCMOS25(3) | 1 | XC3S50A | –0.88 | –0.88 | ns |
| | | | 2 | | –1.33 | –1.33 | ns |
| | | | 3 | | –2.05 | –2.05 | ns |
| | | | 4 | | –2.43 | –2.43 | ns |
| | | | 5 | | –2.34 | –2.34 | ns |
| | | | 6 | | –2.81 | –2.81 | ns |
| | | | 7 | | –3.03 | –3.03 | ns |
| | | | 8 | | –3.83 | –3.57 | ns |
| | | | 1 | XC3S200A | –1.51 | –1.51 | ns |
| | | | 2 | | –2.09 | –2.09 | ns |
| | | | 3 | | –2.40 | –2.40 | ns |
| | | | 4 | | –2.68 | –2.68 | ns |
| | | | 5 | | –2.56 | –2.56 | ns |
| | | | 6 | | –2.99 | –2.99 | ns |
| | | | 7 | | –3.29 | –3.29 | ns |
| | | | 8 | | –3.61 | –3.61 | ns |

*Table 20:* **Setup and Hold Times for the IOB Input Path*(Continued)***

| Symbol | Description | Conditions | IFD_ DELAY_ VALUE | Device | Speed Grade -5 Min | Speed Grade -4 Min | Units |
|---|---|---|---|---|---|---|---|
| $T_{IOICKPD}$ | Time from the active transition at the ICLK input of the Input Flip-Flop (IFF) to the point where data must be held at the Input pin. The Input Delay is programmed. | LVCMOS25(3) | 1 | XC3S400A | –1.12 | –1.12 | ns |
| | | | 2 | | –1.70 | –1.70 | ns |
| | | | 3 | | –2.08 | –2.08 | ns |
| | | | 4 | | –2.38 | –2.38 | ns |
| | | | 5 | | –2.23 | –2.23 | ns |
| | | | 6 | | –2.69 | –2.69 | ns |
| | | | 7 | | –3.08 | –3.08 | ns |
| | | | 8 | | –3.35 | –3.35 | ns |
| | | | 1 | XC3S700A | –1.67 | –1.67 | ns |
| | | | 2 | | –2.27 | –2.27 | ns |
| | | | 3 | | –2.59 | –2.59 | ns |
| | | | 4 | | –2.92 | –2.92 | ns |
| | | | 5 | | –2.89 | –2.89 | ns |
| | | | 6 | | –3.22 | –3.22 | ns |
| | | | 7 | | –3.52 | –3.52 | ns |
| | | | 8 | | –3.81 | –3.81 | ns |
| | | | 1 | XC3S1400A | –1.60 | –1.60 | ns |
| | | | 2 | | –2.06 | –2.06 | ns |
| | | | 3 | | –2.46 | –2.46 | ns |
| | | | 4 | | –2.86 | –2.86 | ns |
| | | | 5 | | –2.88 | –2.88 | ns |
| | | | 6 | | –3.24 | –3.24 | ns |
| | | | 7 | | –3.55 | –3.55 | ns |
| | | | 8 | | –3.89 | –3.89 | ns |
| **Set/Reset Pulse Width** | | | | | | | |
| $T_{RPW_IOB}$ | Minimum pulse width to SR control input on IOB | - | - | All | 1.33 | 1.61 | ns |

**Notes:**

1. The numbers in this table are tested using the methodology presented in Table 27 and are based on the operating conditions set forth in Table 8 and Table 11.
2. This setup time requires adjustment whenever a signal standard other than LVCMOS25 is assigned to the data Input. If this is true, add the appropriate Input adjustment from Table 23.
3. These hold times require adjustment whenever a signal standard other than LVCMOS25 is assigned to the data Input. If this is true, subtract the appropriate Input adjustment from Table 23. When the hold time is negative, it is possible to change the data before the clock's active edge.

*Table 21:* **Sample Window (Source Synchronous)**

| Symbol | Description | Max | Units |
|---|---|---|---|
| $T_{SAMP}$ | Setup and hold capture window of an IOB flip-flop. | The input capture sample window value is highly specific to a particular application, device, package, I/O standard, I/O placement, DCM usage, and clock buffer. Please consult the appropriate Xilinx Answer Record for application-specific values.<br>• Answer Record 30879 | ps |

## Input Propagation Times

*Table 22:* **Propagation Times for the IOB Input Path**

| Symbol | Description | Conditions | DELAY_VALUE | Device | Speed Grade -5 Max | Speed Grade -4 Max | Units |
|---|---|---|---|---|---|---|---|
| **Propagation Times** | | | | | | | |
| $T_{IOPI}$ | The time it takes for data to travel from the Input pin to the I output with no input delay programmed | LVCMOS25(2) | IBUF_DELAY_VALUE=0 | XC3S50A | 1.04 | 1.12 | ns |
| | | | | XC3S200A | 0.87 | 0.87 | ns |
| | | | | XC3S400A | 0.65 | 0.72 | ns |
| | | | | XC3S700A | 0.92 | 0.92 | ns |
| | | | | XC3S1400A | 0.96 | 1.21 | ns |
| $T_{IOPID}$ | The time it takes for data to travel from the Input pin to the I output with the input delay programmed | LVCMOS25(2) | 1 | XC3S50A | 1.79 | 2.07 | ns |
| | | | 2 | | 2.13 | 2.46 | ns |
| | | | 3 | | 2.36 | 2.71 | ns |
| | | | 4 | | 2.88 | 3.21 | ns |
| | | | 5 | | 3.11 | 3.46 | ns |
| | | | 6 | | 3.45 | 3.84 | ns |
| | | | 7 | | 3.75 | 4.19 | ns |
| | | | 8 | | 4.00 | 4.47 | ns |
| | | | 9 | | 3.61 | 4.11 | ns |
| | | | 10 | | 3.95 | 4.50 | ns |
| | | | 11 | | 4.18 | 4.67 | ns |
| | | | 12 | | 4.75 | 5.20 | ns |
| | | | 13 | | 4.98 | 5.44 | ns |
| | | | 14 | | 5.31 | 5.95 | ns |
| | | | 15 | | 5.62 | 6.28 | ns |
| | | | 16 | | 5.86 | 6.57 | ns |
| | | | 1 | XC3S200A | 1.57 | 1.65 | ns |
| | | | 2 | | 1.87 | 1.97 | ns |
| | | | 3 | | 2.16 | 2.33 | ns |
| | | | 4 | | 2.68 | 2.96 | ns |
| | | | 5 | | 2.87 | 3.19 | ns |
| | | | 6 | | 3.20 | 3.60 | ns |
| | | | 7 | | 3.57 | 4.02 | ns |
| | | | 8 | | 3.79 | 4.26 | ns |
| | | | 9 | | 3.42 | 3.86 | ns |
| | | | 10 | | 3.79 | 4.25 | ns |
| | | | 11 | | 4.02 | 4.55 | ns |
| | | | 12 | | 4.62 | 5.24 | ns |
| | | | 13 | | 4.86 | 5.53 | ns |
| | | | 14 | | 5.18 | 5.94 | ns |

*Table 22:* **Propagation Times for the IOB Input Path*(Continued)***

| Symbol | Description | Conditions | DELAY_VALUE | Device | Speed Grade -5 Max | Speed Grade -4 Max | Units |
|---|---|---|---|---|---|---|---|
| $T_{IOPID}$ | The time it takes for data to travel from the Input pin to the I output with the input delay programmed | LVCMOS25[2] | 15 | XC3S200A | 5.43 | 6.24 | ns |
| | | | 16 | | 5.75 | 6.59 | ns |
| | | | 1 | XC3S400A | 1.32 | 1.43 | ns |
| | | | 2 | | 1.67 | 1.83 | ns |
| | | | 3 | | 1.90 | 2.07 | ns |
| | | | 4 | | 2.33 | 2.52 | ns |
| | | | 5 | | 2.60 | 2.91 | ns |
| | | | 6 | | 2.94 | 3.20 | ns |
| | | | 7 | | 3.23 | 3.51 | ns |
| | | | 8 | | 3.50 | 3.85 | ns |
| | | | 9 | | 3.18 | 3.55 | ns |
| | | | 10 | | 3.53 | 3.95 | ns |
| | | | 11 | | 3.76 | 4.20 | ns |
| | | | 12 | | 4.26 | 4.67 | ns |
| | | | 13 | | 4.51 | 4.97 | ns |
| | | | 14 | | 4.85 | 5.32 | ns |
| | | | 15 | | 5.14 | 5.64 | ns |
| | | | 16 | | 5.40 | 5.95 | ns |
| | | | 1 | XC3S700A | 1.84 | 1.87 | ns |
| | | | 2 | | 2.20 | 2.27 | ns |
| | | | 3 | | 2.46 | 2.60 | ns |
| | | | 4 | | 2.93 | 3.15 | ns |
| | | | 5 | | 3.21 | 3.45 | ns |
| | | | 6 | | 3.54 | 3.80 | ns |
| | | | 7 | | 3.86 | 4.16 | ns |
| | | | 8 | | 4.13 | 4.48 | ns |
| | | | 9 | | 3.82 | 4.19 | ns |
| | | | 10 | | 4.17 | 4.58 | ns |
| | | | 11 | | 4.43 | 4.89 | ns |
| | | | 12 | | 4.95 | 5.49 | ns |
| | | | 13 | | 5.22 | 5.83 | ns |
| | | | 14 | | 5.57 | 6.21 | ns |
| | | | 15 | | 5.89 | 6.55 | ns |
| | | | 16 | | 6.16 | 6.89 | ns |
| | | | 1 | XC3S1400A | 1.95 | 2.18 | ns |
| | | | 2 | | 2.29 | 2.59 | ns |
| | | | 3 | | 2.54 | 2.84 | ns |
| | | | 4 | | 2.96 | 3.30 | ns |

*Table 22:* **Propagation Times for the IOB Input Path*(Continued)***

| Symbol | Description | Conditions | DELAY_VALUE | Device | Speed Grade -5 Max | Speed Grade -4 Max | Units |
|---|---|---|---|---|---|---|---|
| $T_{IOPID}$ | The time it takes for data to travel from the Input pin to the I output with the input delay programmed | LVCMOS25(2) | 5 | XC3S1400A | 3.17 | 3.52 | ns |
| | | | 6 | | 3.52 | 3.92 | ns |
| | | | 7 | | 3.82 | 4.18 | ns |
| | | | 8 | | 4.10 | 4.57 | ns |
| | | | 9 | | 3.84 | 4.31 | ns |
| | | | 10 | | 4.20 | 4.79 | ns |
| | | | 11 | | 4.46 | 5.06 | ns |
| | | | 12 | | 4.87 | 5.51 | ns |
| | | | 13 | | 5.07 | 5.73 | ns |
| | | | 14 | | 5.43 | 6.08 | ns |
| | | | 15 | | 5.73 | 6.33 | ns |
| | | | 16 | | 6.01 | 6.77 | ns |
| $T_{IOPLI}$ | The time it takes for data to travel from the Input pin through the IFF latch to the I output with no input delay programmed | LVCMOS25(2) | IFD_DELAY_VALUE=0 | XC3S50A | 1.70 | 1.81 | ns |
| | | | | XC3S200A | 1.85 | 2.04 | ns |
| | | | | XC3S400A | 1.44 | 1.74 | ns |
| | | | | XC3S700A | 1.48 | 1.74 | ns |
| | | | | XC3S1400A | 1.50 | 1.97 | ns |
| $T_{IOPLID}$ | The time it takes for data to travel from the Input pin through the IFF latch to the I output with the input delay programmed | LVCMOS25(2) | 1 | XC3S50A | 2.30 | 2.41 | ns |
| | | | 2 | | 3.24 | 3.35 | ns |
| | | | 3 | | 3.65 | 3.98 | ns |
| | | | 4 | | 4.18 | 4.55 | ns |
| | | | 5 | | 4.02 | 4.47 | ns |
| | | | 6 | | 4.86 | 5.32 | ns |
| | | | 7 | | 5.61 | 6.17 | ns |
| | | | 8 | | 6.11 | 6.75 | ns |
| | | | 1 | XC3S200A | 2.19 | 2.43 | ns |
| | | | 2 | | 2.86 | 3.16 | ns |
| | | | 3 | | 3.52 | 4.01 | ns |
| | | | 4 | | 4.02 | 4.60 | ns |
| | | | 5 | | 3.83 | 4.43 | ns |
| | | | 6 | | 4.70 | 5.46 | ns |
| | | | 7 | | 5.48 | 6.33 | ns |
| | | | 8 | | 5.99 | 6.94 | ns |
| | | | 1 | XC3S400A | 1.93 | 2.25 | ns |
| | | | 2 | | 2.57 | 2.90 | ns |
| | | | 3 | | 3.16 | 3.66 | ns |
| | | | 4 | | 3.63 | 4.19 | ns |

*Table 22:* **Propagation Times for the IOB Input Path*(Continued)***

| Symbol | Description | Conditions | DELAY_VALUE | Device | Speed Grade -5 Max | Speed Grade -4 Max | Units |
|---|---|---|---|---|---|---|---|
| $T_{IOPLID}$ | The time it takes for data to travel from the Input pin through the IFF latch to the I output with the input delay programmed | LVCMOS25(2) | 5 | XC3S400A | 3.55 | 4.18 | ns |
| | | | 6 | | 4.34 | 5.03 | ns |
| | | | 7 | | 5.09 | 5.88 | ns |
| | | | 8 | | 5.58 | 6.42 | ns |
| | | | 1 | XC3S700A | 1.96 | 2.18 | ns |
| | | | 2 | | 2.76 | 3.06 | ns |
| | | | 3 | | 3.45 | 3.95 | ns |
| | | | 4 | | 3.97 | 4.54 | ns |
| | | | 5 | | 3.83 | 4.37 | ns |
| | | | 6 | | 4.74 | 5.42 | ns |
| | | | 7 | | 5.53 | 6.33 | ns |
| | | | 8 | | 6.06 | 6.96 | ns |
| | | | 1 | XC3S1400A | 1.93 | 2.40 | ns |
| | | | 2 | | 2.69 | 3.15 | ns |
| | | | 3 | | 3.52 | 3.99 | ns |
| | | | 4 | | 3.89 | 4.55 | ns |
| | | | 5 | | 3.95 | 4.42 | ns |
| | | | 6 | | 4.53 | 5.32 | ns |
| | | | 7 | | 5.30 | 6.21 | ns |
| | | | 8 | | 5.83 | 6.80 | ns |

**Notes:**

1. The numbers in this table are tested using the methodology presented in Table 27 and are based on the operating conditions set forth in Table 8 and Table 11.
2. This propagation time requires adjustment whenever a signal standard other than LVCMOS25 is assigned to the data Input. When this is true, *add* the appropriate Input adjustment from Table 23.

## Input Timing Adjustments

*Table 23:* **Input Timing Adjustments by IOSTANDARD**

| Convert Input Time from LVCMOS25 to the Following Signal Standard (IOSTANDARD) | Add the Adjustment Below | | Units |
|---|---|---|---|
| | Speed Grade | | |
| | -5 | -4 | |
| **Single-Ended Standards** | | | |
| LVTTL | 0.62 | 0.62 | ns |
| LVCMOS33 | 0.54 | 0.54 | ns |
| LVCMOS25 | 0 | 0 | ns |
| LVCMOS18 | 0.83 | 0.83 | ns |
| LVCMOS15 | 0.60 | 0.60 | ns |
| LVCMOS12 | 0.31 | 0.31 | ns |
| PCI33_3 | 0.41 | 0.41 | ns |
| PCI66_3 | 0.41 | 0.41 | ns |
| HSTL_I | 0.72 | 0.72 | ns |
| HSTL_III | 0.77 | 0.77 | ns |
| HSTL_I_18 | 0.69 | 0.69 | ns |
| HSTL_II_18 | 0.69 | 0.69 | ns |
| HSTL_III_18 | 0.79 | 0.79 | ns |
| SSTL18_I | 0.71 | 0.71 | ns |
| SSTL18_II | 0.71 | 0.71 | ns |
| SSTL2_I | 0.68 | 0.68 | ns |
| SSTL2_II | 0.68 | 0.68 | ns |
| SSTL3_I | 0.78 | 0.78 | ns |
| SSTL3_II | 0.78 | 0.78 | ns |

*Table 23:* **Input Timing Adjustments by IOSTANDARD*(Continued)***

| Convert Input Time from LVCMOS25 to the Following Signal Standard (IOSTANDARD) | Add the Adjustment Below | | Units |
|---|---|---|---|
| | Speed Grade | | |
| | -5 | -4 | |
| **Differential Standards** | | | |
| LVDS_25 | 0.76 | 0.76 | ns |
| LVDS_33 | 0.79 | 0.79 | ns |
| BLVDS_25 | 0.79 | 0.79 | ns |
| MINI_LVDS_25 | 0.78 | 0.78 | ns |
| MINI_LVDS_33 | 0.79 | 0.79 | ns |
| LVPECL_25 | 0.78 | 0.78 | ns |
| LVPECL_33 | 0.79 | 0.79 | ns |
| RSDS_25 | 0.79 | 0.79 | ns |
| RSDS_33 | 0.77 | 0.77 | ns |
| TMDS_33 | 0.79 | 0.79 | ns |
| PPDS_25 | 0.79 | 0.79 | ns |
| PPDS_33 | 0.79 | 0.79 | ns |
| DIFF_HSTL_I_18 | 0.74 | 0.74 | ns |
| DIFF_HSTL_II_18 | 0.72 | 0.72 | ns |
| DIFF_HSTL_III_18 | 1.05 | 1.05 | ns |
| DIFF_HSTL_I | 0.72 | 0.72 | ns |
| DIFF_HSTL_III | 1.05 | 1.05 | ns |
| DIFF_SSTL18_I | 0.71 | 0.71 | ns |
| DIFF_SSTL18_II | 0.71 | 0.71 | ns |
| DIFF_SSTL2_I | 0.74 | 0.74 | ns |
| DIFF_SSTL2_II | 0.75 | 0.75 | ns |
| DIFF_SSTL3_I | 1.06 | 1.06 | ns |
| DIFF_SSTL3_II | 1.06 | 1.06 | ns |

**Notes:**

1. The numbers in this table are tested using the methodology presented in Table 27 and are based on the operating conditions set forth in Table 8, Table 11, and Table 13.
2. These adjustments are used to convert input path times originally specified for the LVCMOS25 standard to times that correspond to other signal standards.

## Output Propagation Times

*Table 24:* **Timing for the IOB Output Path**

| Symbol | Description | Conditions | Device | Speed Grade -5 Max | Speed Grade -4 Max | Units |
|---|---|---|---|---|---|---|
| **Clock-to-Output Times** | | | | | | |
| $T_{IOCKP}$ | When reading from the Output Flip-Flop (OFF), the time from the active transition at the OCLK input to data appearing at the Output pin | LVCMOS25(2), 12 mA output drive, Fast slew rate | All | 2.87 | 3.13 | ns |
| **Propagation Times** | | | | | | |
| $T_{IOOP}$ | The time it takes for data to travel from the IOB's O input to the Output pin | LVCMOS25(2), 12 mA output drive, Fast slew rate | All | 2.78 | 2.91 | ns |
| **Set/Reset Times** | | | | | | |
| $T_{IOSRP}$ | Time from asserting the OFF's SR input to setting/resetting data at the Output pin | LVCMOS25(2), 12 mA output drive, Fast slew rate | All | 3.63 | 3.89 | ns |
| $T_{IOGSRQ}$ | Time from asserting the Global Set Reset (GSR) input on the STARTUP_SPARTAN3A primitive to setting/resetting data at the Output pin | | | 8.62 | 9.65 | ns |

**Notes:**

1. The numbers in this table are tested using the methodology presented in Table 27 and are based on the operating conditions set forth in Table 8 and Table 11.
2. This time requires adjustment whenever a signal standard other than LVCMOS25 with 12 mA drive and Fast slew rate is assigned to the data Output. When this is true, *add* the appropriate Output adjustment from Table 26.

## Three-State Output Propagation Times

*Table 25:* **Timing for the IOB Three-State Path**

| Symbol | Description | Conditions | Device | Speed Grade -5 Max | Speed Grade -4 Max | Units |
|---|---|---|---|---|---|---|
| **Synchronous Output Enable/Disable Times** | | | | | | |
| $T_{IOCKHZ}$ | Time from the active transition at the OTCLK input of the Three-state Flip-Flop (TFF) to when the Output pin enters the high-impedance state | LVCMOS25, 12 mA output drive, Fast slew rate | All | 0.63 | 0.76 | ns |
| $T_{IOCKON}$(2) | Time from the active transition at TFF's OTCLK input to when the Output pin drives valid data | | All | 2.80 | 3.06 | ns |
| **Asynchronous Output Enable/Disable Times** | | | | | | |
| $T_{GTS}$ | Time from asserting the Global Three State (GTS) input on the STARTUP_SPARTAN3A primitive to when the Output pin enters the high-impedance state | LVCMOS25, 12 mA output drive, Fast slew rate | All | 9.47 | 10.36 | ns |
| **Set/Reset Times** | | | | | | |
| $T_{IOSRHZ}$ | Time from asserting TFF's SR input to when the Output pin enters a high-impedance state | LVCMOS25, 12 mA output drive, Fast slew rate | All | 1.61 | 1.86 | ns |
| $T_{IOSRON}$(2) | Time from asserting TFF's SR input at TFF to when the Output pin drives valid data | | All | 3.57 | 3.82 | ns |

**Notes:**

1. The numbers in this table are tested using the methodology presented in Table 27 and are based on the operating conditions set forth in Table 8 and Table 11.
2. This time requires adjustment whenever a signal standard other than LVCMOS25 with 12 mA drive and Fast slew rate is assigned to the data Output. When this is true, *add* the appropriate Output adjustment from Table 26.

## Output Timing Adjustments

*Table 26:* **Output Timing Adjustments for IOB**

| Convert Output Time from LVCMOS25 with 12mA Drive and Fast Slew Rate to the Following Signal Standard (IOSTANDARD) | | | Add the Adjustment Below | | Units |
|---|---|---|---|---|---|
| | | | Speed Grade | | |
| | | | -5 | -4 | |
| **Single-Ended Standards** | | | | | |
| LVTTL | Slow | 2 mA | 5.58 | 5.58 | ns |
| | | 4 mA | 3.16 | 3.16 | ns |
| | | 6 mA | 3.17 | 3.17 | ns |
| | | 8 mA | 2.09 | 2.09 | ns |
| | | 12 mA | 1.62 | 1.62 | ns |
| | | 16 mA | 1.24 | 1.24 | ns |
| | | 24 mA | 2.74(3) | 2.74(3) | ns |
| | Fast | 2 mA | 3.03 | 3.03 | ns |
| | | 4 mA | 1.71 | 1.71 | ns |
| | | 6 mA | 1.71 | 1.71 | ns |
| | | 8 mA | 0.53 | 0.53 | ns |
| | | 12 mA | 0.53 | 0.53 | ns |
| | | 16 mA | 0.59 | 0.59 | ns |
| | | 24 mA | 0.60 | 0.60 | ns |
| | QuietIO | 2 mA | 27.67 | 27.67 | ns |
| | | 4 mA | 27.67 | 27.67 | ns |
| | | 6 mA | 27.67 | 27.67 | ns |
| | | 8 mA | 16.71 | 16.71 | ns |
| | | 12 mA | 16.67 | 16.67 | ns |
| | | 16 mA | 16.22 | 16.22 | ns |
| | | 24 mA | 12.11 | 12.11 | ns |

*Table 26:* **Output Timing Adjustments for IOB*(Continued)***

| Convert Output Time from LVCMOS25 with 12mA Drive and Fast Slew Rate to the Following Signal Standard (IOSTANDARD) | | | Add the Adjustment Below | | Units |
|---|---|---|---|---|---|
| | | | Speed Grade | | |
| | | | -5 | -4 | |
| LVCMOS33 | Slow | 2 mA | 5.58 | 5.58 | ns |
| | | 4 mA | 3.17 | 3.17 | ns |
| | | 6 mA | 3.17 | 3.17 | ns |
| | | 8 mA | 2.09 | 2.09 | ns |
| | | 12 mA | 1.24 | 1.24 | ns |
| | | 16 mA | 1.15 | 1.15 | ns |
| | | 24 mA | 2.55(3) | 2.55(3) | ns |
| | Fast | 2 mA | 3.02 | 3.02 | ns |
| | | 4 mA | 1.71 | 1.71 | ns |
| | | 6 mA | 1.72 | 1.72 | ns |
| | | 8 mA | 0.53 | 0.53 | ns |
| | | 12 mA | 0.59 | 0.59 | ns |
| | | 16 mA | 0.59 | 0.59 | ns |
| | | 24 mA | 0.51 | 0.51 | ns |
| | QuietIO | 2 mA | 27.67 | 27.67 | ns |
| | | 4 mA | 27.67 | 27.67 | ns |
| | | 6 mA | 27.67 | 27.67 | ns |
| | | 8 mA | 16.71 | 16.71 | ns |
| | | 12 mA | 16.29 | 16.29 | ns |
| | | 16 mA | 16.18 | 16.18 | ns |
| | | 24 mA | 12.11 | 12.11 | ns |

*Table 26:* **Output Timing Adjustments for IOB*(Continued)***

| Convert Output Time from LVCMOS25 with 12mA Drive and Fast Slew Rate to the Following Signal Standard (IOSTANDARD) | | | Add the Adjustment Below | | Units |
|---|---|---|---|---|---|
| | | | Speed Grade | | |
| | | | -5 | -4 | |
| LVCMOS25 | Slow | 2 mA | 5.33 | 5.33 | ns |
| | | 4 mA | 2.81 | 2.81 | ns |
| | | 6 mA | 2.82 | 2.82 | ns |
| | | 8 mA | 1.14 | 1.14 | ns |
| | | 12 mA | 1.10 | 1.10 | ns |
| | | 16 mA | 0.83 | 0.83 | ns |
| | | 24 mA | 2.26(3) | 2.26(3) | ns |
| | Fast | 2 mA | 4.36 | 4.36 | ns |
| | | 4 mA | 1.76 | 1.76 | ns |
| | | 6 mA | 1.25 | 1.25 | ns |
| | | 8 mA | 0.38 | 0.38 | ns |
| | | 12 mA | 0 | 0 | ns |
| | | 16 mA | 0.01 | 0.01 | ns |
| | | 24 mA | 0.01 | 0.01 | ns |
| | QuietIO | 2 mA | 25.92 | 25.92 | ns |
| | | 4 mA | 25.92 | 25.92 | ns |
| | | 6 mA | 25.92 | 25.92 | ns |
| | | 8 mA | 15.57 | 15.57 | ns |
| | | 12 mA | 15.59 | 15.59 | ns |
| | | 16 mA | 14.27 | 14.27 | ns |
| | | 24 mA | 11.37 | 11.37 | ns |
| LVCMOS18 | Slow | 2 mA | 4.48 | 4.48 | ns |
| | | 4 mA | 3.69 | 3.69 | ns |
| | | 6 mA | 2.91 | 2.91 | ns |
| | | 8 mA | 1.99 | 1.99 | ns |
| | | 12 mA | 1.57 | 1.57 | ns |
| | | 16 mA | 1.19 | 1.19 | ns |
| | Fast | 2 mA | 3.96 | 3.96 | ns |
| | | 4 mA | 2.57 | 2.57 | ns |
| | | 6 mA | 1.90 | 1.90 | ns |
| | | 8 mA | 1.06 | 1.06 | ns |
| | | 12 mA | 0.83 | 0.83 | ns |
| | | 16 mA | 0.63 | 0.63 | ns |
| | QuietIO | 2 mA | 24.97 | 24.97 | ns |
| | | 4 mA | 24.97 | 24.97 | ns |
| | | 6 mA | 24.08 | 24.08 | ns |
| | | 8 mA | 16.43 | 16.43 | ns |
| | | 12 mA | 14.52 | 14.52 | ns |
| | | 16 mA | 13.41 | 13.41 | ns |

*Table 26:* **Output Timing Adjustments for IOB*(Continued)***

| Convert Output Time from LVCMOS25 with 12mA Drive and Fast Slew Rate to the Following Signal Standard (IOSTANDARD) | | | Add the Adjustment Below | | Units |
|---|---|---|---|---|---|
| | | | Speed Grade | | |
| | | | -5 | -4 | |
| LVCMOS15 | Slow | 2 mA | 5.82 | 5.82 | ns |
| | | 4 mA | 3.97 | 3.97 | ns |
| | | 6 mA | 3.21 | 3.21 | ns |
| | | 8 mA | 2.53 | 2.53 | ns |
| | | 12 mA | 2.06 | 2.06 | ns |
| | Fast | 2 mA | 5.23 | 5.23 | ns |
| | | 4 mA | 3.05 | 3.05 | ns |
| | | 6 mA | 1.95 | 1.95 | ns |
| | | 8 mA | 1.60 | 1.60 | ns |
| | | 12 mA | 1.30 | 1.30 | ns |
| | QuietIO | 2 mA | 34.11 | 34.11 | ns |
| | | 4 mA | 25.66 | 25.66 | ns |
| | | 6 mA | 24.64 | 24.64 | ns |
| | | 8 mA | 22.06 | 22.06 | ns |
| | | 12 mA | 20.64 | 20.64 | ns |
| LVCMOS12 | Slow | 2 mA | 7.14 | 7.14 | ns |
| | | 4 mA | 4.87 | 4.87 | ns |
| | | 6 mA | 5.67 | 5.67 | ns |
| | Fast | 2 mA | 6.77 | 6.77 | ns |
| | | 4 mA | 5.02 | 5.02 | ns |
| | | 6 mA | 4.09 | 4.09 | ns |
| | QuietIO | 2 mA | 50.76 | 50.76 | ns |
| | | 4 mA | 43.17 | 43.17 | ns |
| | | 6 mA | 37.31 | 37.31 | ns |
| PCI33_3 | | | 0.34 | 0.34 | ns |
| PCI66_3 | | | 0.34 | 0.34 | ns |
| HSTL_I | | | 0.78 | 0.78 | ns |
| HSTL_III | | | 1.16 | 1.16 | ns |
| HSTL_I_18 | | | 0.35 | 0.35 | ns |
| HSTL_II_18 | | | 0.30 | 0.30 | ns |
| HSTL_III_18 | | | 0.47 | 0.47 | ns |
| SSTL18_I | | | 0.40 | 0.40 | ns |
| SSTL18_II | | | 0.30 | 0.30 | ns |
| SSTL2_I | | | 0 | 0 | ns |
| SSTL2_II | | | –0.05 | –0.05 | ns |
| SSTL3_I | | | 0 | 0 | ns |
| SSTL3_II | | | 0.17 | 0.17 | ns |

*Table 26:* **Output Timing Adjustments for IOB*(Continued)***

| Convert Output Time from LVCMOS25 with 12mA Drive and Fast Slew Rate to the Following Signal Standard (IOSTANDARD) | Add the Adjustment Below | | Units |
|---|---|---|---|
| | Speed Grade | | |
| | -5 | -4 | |
| **Differential Standards** | | | |
| LVDS_25 | 1.16 | 1.16 | ns |
| LVDS_33 | 0.46 | 0.46 | ns |
| BLVDS_25 | 0.11 | 0.11 | ns |
| MINI_LVDS_25 | 0.75 | 0.75 | ns |
| MINI_LVDS_33 | 0.40 | 0.40 | ns |
| LVPECL_25 | Input Only | | |
| LVPECL_33 | | | |
| RSDS_25 | 1.42 | 1.42 | ns |
| RSDS_33 | 0.58 | 0.58 | ns |
| TMDS_33 | 0.46 | 0.46 | ns |
| PPDS_25 | 1.07 | 1.07 | ns |
| PPDS_33 | 0.63 | 0.63 | ns |
| DIFF_HSTL_I_18 | 0.43 | 0.43 | ns |
| DIFF_HSTL_II_18 | 0.41 | 0.41 | ns |
| DIFF_HSTL_III_18 | 0.36 | 0.36 | ns |
| DIFF_HSTL_I | 1.01 | 1.01 | ns |
| DIFF_HSTL_III | 0.54 | 0.54 | ns |
| DIFF_SSTL18_I | 0.49 | 0.49 | ns |
| DIFF_SSTL18_II | 0.41 | 0.41 | ns |
| DIFF_SSTL2_I | 0.82 | 0.82 | ns |
| DIFF_SSTL2_II | 0.09 | 0.09 | ns |
| DIFF_SSTL3_I | 1.16 | 1.16 | ns |
| DIFF_SSTL3_II | 0.28 | 0.28 | ns |

**Notes:**

1. The numbers in this table are tested using the methodology presented in Table 27 and are based on the operating conditions set forth in Table 8, Table 11, and Table 13.
2. These adjustments are used to convert output- and three-state-path times originally specified for the LVCMOS25 standard with 12 mA drive and Fast slew rate to times that correspond to other signal standards. Do not adjust times that measure when outputs go into a high-impedance state.
3. Note that 16 mA drive is faster than 24 mA drive for the Slow slew rate.

## Timing Measurement Methodology

When measuring timing parameters at the programmable I/Os, different signal standards call for different test conditions. Table 27 lists the conditions to use for each standard.

The method for measuring Input timing is as follows: A signal that swings between a Low logic level of $V_L$ and a High logic level of $V_H$ is applied to the Input under test. Some standards also require the application of a bias voltage to the $V_{REF}$ pins of a given bank to properly set the input-switching threshold. The measurement point of the Input signal ($V_M$) is commonly located halfway between $V_L$ and $V_H$.

The Output test setup is shown in Figure 9. A termination voltage $V_T$ is applied to the termination resistor $R_T$, the other end of which is connected to the Output. For each standard, $R_T$ and $V_T$ generally take on the standard values recommended for minimizing signal reflections. If the standard does not ordinarily use terminations (for example, LVCMOS, LVTTL), then $R_T$ is set to 1MΩ to indicate an open connection, and $V_T$ is set to zero. The same measurement point ($V_M$) that was used at the Input is also used at the Output.

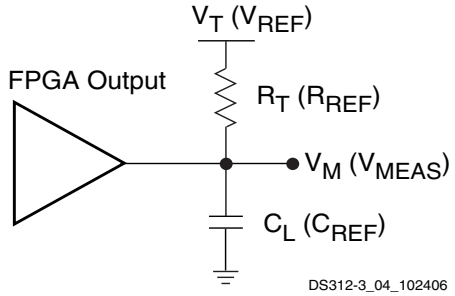


**Notes:**

1. The names shown in parentheses are used in the IBIS file.

*Figure 9:* **Output Test Setup**

*Table 27:* **Test Methods for Timing Measurement at I/Os**

| Signal Standard (IOSTANDARD) | | Inputs | | | Outputs | | Inputs and Outputs |
|---|---|---|---|---|---|---|---|
| | | $V_{REF}$ (V) | $V_L$ (V) | $V_H$ (V) | $R_T$ (Ω) | $V_T$ (V) | $V_M$ (V) |
| **Single-Ended** | | | | | | | |
| LVTTL | | - | 0 | 3.3 | 1M | 0 | 1.4 |
| LVCMOS33 | | - | 0 | 3.3 | 1M | 0 | 1.65 |
| LVCMOS25 | | - | 0 | 2.5 | 1M | 0 | 1.25 |
| LVCMOS18 | | - | 0 | 1.8 | 1M | 0 | 0.9 |
| LVCMOS15 | | - | 0 | 1.5 | 1M | 0 | 0.75 |
| LVCMOS12 | | - | 0 | 1.2 | 1M | 0 | 0.6 |
| PCI33_3 | Rising | - | Note 3 | Note 3 | 25 | 0 | 0.94 |
| | Falling | | | | 25 | 3.3 | 2.03 |
| PCI66_3 | Rising | - | Note 3 | Note 3 | 25 | 0 | 0.94 |
| | Falling | | | | 25 | 3.3 | 2.03 |
| HSTL_I | | 0.75 | $V_{REF}$ – 0.5 | $V_{REF}$ + 0.5 | 50 | 0.75 | $V_{REF}$ |
| HSTL_III | | 0.9 | $V_{REF}$ – 0.5 | $V_{REF}$ + 0.5 | 50 | 1.5 | $V_{REF}$ |
| HSTL_I_18 | | 0.9 | $V_{REF}$ – 0.5 | $V_{REF}$ + 0.5 | 50 | 0.9 | $V_{REF}$ |
| HSTL_II_18 | | 0.9 | $V_{REF}$ – 0.5 | $V_{REF}$ + 0.5 | 25 | 0.9 | $V_{REF}$ |
| HSTL_III_18 | | 1.1 | $V_{REF}$ – 0.5 | $V_{REF}$ + 0.5 | 50 | 1.8 | $V_{REF}$ |
| SSTL18_I | | 0.9 | $V_{REF}$ – 0.5 | $V_{REF}$ + 0.5 | 50 | 0.9 | $V_{REF}$ |
| SSTL18_II | | 0.9 | $V_{REF}$ – 0.5 | $V_{REF}$ + 0.5 | 25 | 0.9 | $V_{REF}$ |
| SSTL2_I | | 1.25 | $V_{REF}$ – 0.75 | $V_{REF}$ + 0.75 | 50 | 1.25 | $V_{REF}$ |
| SSTL2_II | | 1.25 | $V_{REF}$ – 0.75 | $V_{REF}$ + 0.75 | 25 | 1.25 | $V_{REF}$ |
| SSTL3_I | | 1.5 | $V_{REF}$ – 0.75 | $V_{REF}$ + 0.75 | 50 | 1.5 | $V_{REF}$ |
| SSTL3_II | | 1.5 | $V_{REF}$ – 0.75 | $V_{REF}$ + 0.75 | 25 | 1.5 | $V_{REF}$ |

*Table 27:* **Test Methods for Timing Measurement at I/Os*(Continued)***

| Signal Standard (IOSTANDARD) | Inputs | | | Outputs | | Inputs and Outputs |
|---|---|---|---|---|---|---|
| | $V_{REF}$ (V) | $V_L$ (V) | $V_H$ (V) | $R_T$ (Ω) | $V_T$ (V) | $V_M$ (V) |
| **Differential** | | | | | | |
| LVDS_25 | - | $V_{ICM}$ – 0.125 | $V_{ICM}$ + 0.125 | 50 | 1.2 | $V_{ICM}$ |
| LVDS_33 | - | $V_{ICM}$ – 0.125 | $V_{ICM}$ + 0.125 | 50 | 1.2 | $V_{ICM}$ |
| BLVDS_25 | - | $V_{ICM}$ – 0.125 | $V_{ICM}$ + 0.125 | 1M | 0 | $V_{ICM}$ |
| MINI_LVDS_25 | - | $V_{ICM}$ – 0.125 | $V_{ICM}$ + 0.125 | 50 | 1.2 | $V_{ICM}$ |
| MINI_LVDS_33 | - | $V_{ICM}$ – 0.125 | $V_{ICM}$ + 0.125 | 50 | 1.2 | $V_{ICM}$ |
| LVPECL_25 | - | $V_{ICM}$ – 0.3 | $V_{ICM}$ + 0.3 | N/A | N/A | $V_{ICM}$ |
| LVPECL_33 | - | $V_{ICM}$ – 0.3 | $V_{ICM}$ + 0.3 | N/A | N/A | $V_{ICM}$ |
| RSDS_25 | - | $V_{ICM}$ – 0.1 | $V_{ICM}$ + 0.1 | 50 | 1.2 | $V_{ICM}$ |
| RSDS_33 | - | $V_{ICM}$ – 0.1 | $V_{ICM}$ + 0.1 | 50 | 1.2 | $V_{ICM}$ |
| TMDS_33 | - | $V_{ICM}$ – 0.1 | $V_{ICM}$ + 0.1 | 50 | 3.3 | $V_{ICM}$ |
| PPDS_25 | - | $V_{ICM}$ – 0.1 | $V_{ICM}$ + 0.1 | 50 | 0.8 | $V_{ICM}$ |
| PPDS_33 | - | $V_{ICM}$ – 0.1 | $V_{ICM}$ + 0.1 | 50 | 0.8 | $V_{ICM}$ |
| DIFF_HSTL_I | - | $V_{ICM}$ – 0.5 | $V_{ICM}$ + 0.5 | 50 | 0.75 | $V_{ICM}$ |
| DIFF_HSTL_III | - | $V_{ICM}$ – 0.5 | $V_{ICM}$ + 0.5 | 50 | 1.5 | $V_{ICM}$ |
| DIFF_HSTL_I_18 | - | $V_{ICM}$ – 0.5 | $V_{ICM}$ + 0.5 | 50 | 0.9 | $V_{ICM}$ |
| DIFF_HSTL_II_18 | - | $V_{ICM}$ – 0.5 | $V_{ICM}$ + 0.5 | 50 | 0.9 | $V_{ICM}$ |
| DIFF_HSTL_III_18 | - | $V_{ICM}$ – 0.5 | $V_{ICM}$ + 0.5 | 50 | 1.8 | $V_{ICM}$ |
| DIFF_SSTL18_I | - | $V_{ICM}$ – 0.5 | $V_{ICM}$ + 0.5 | 50 | 0.9 | $V_{ICM}$ |
| DIFF_SSTL18_II | - | $V_{ICM}$ – 0.5 | $V_{ICM}$ + 0.5 | 50 | 0.9 | $V_{ICM}$ |
| DIFF_SSTL2_I | - | $V_{ICM}$ – 0.5 | $V_{ICM}$ + 0.5 | 50 | 1.25 | $V_{ICM}$ |
| DIFF_SSTL2_II | - | $V_{ICM}$ – 0.5 | $V_{ICM}$ + 0.5 | 50 | 1.25 | $V_{ICM}$ |
| DIFF_SSTL3_I | - | $V_{ICM}$ – 0.5 | $V_{ICM}$ + 0.5 | 50 | 1.5 | $V_{ICM}$ |
| DIFF_SSTL3_II | - | $V_{ICM}$ – 0.5 | $V_{ICM}$ + 0.5 | 50 | 1.5 | $V_{ICM}$ |

**Notes:**

1. Descriptions of the relevant symbols are as follows:
   $V_{REF}$ – The reference voltage for setting the input switching threshold
   $V_{ICM}$ – The common mode input voltage
   $V_M$ – Voltage of measurement point on signal transition
   $V_L$ – Low-level test voltage at Input pin
   $V_H$ – High-level test voltage at Input pin
   $R_T$ – Effective termination resistance, which takes on a value of 1 MΩ when no parallel termination is required
   $V_T$ – Termination voltage
2. The load capacitance ($C_L$) at the Output pin is 0 pF for all signal standards.
3. According to the PCI specification.

The capacitive load ($C_L$) is connected between the output and GND. *The Output timing for all standards, as published in the speed files and the data sheet, is always based on a $C_L$ value of zero.* High-impedance probes (less than 1 pF) are used for all measurements. Any delay that the test fixture might contribute to test measurements is subtracted from those measurements to produce the final timing numbers as published in the speed files and data sheet.

## Using IBIS Models to Simulate Load Conditions in Application

IBIS models permit the most accurate prediction of timing delays for a given application. The parameters found in the IBIS model ($V_{REF}$, $R_{REF}$, and $V_{MEAS}$) correspond directly with the parameters used in Table 27 ($V_T$, $R_T$, and $V_M$). Do not confuse $V_{REF}$ (the termination voltage) from the IBIS model with $V_{REF}$ (the input-switching threshold) from the table. A fourth parameter, $C_{REF}$, is always zero. The four parameters describe all relevant output test conditions. IBIS models are found in the Xilinx development software as well as at the following link:

www.xilinx.com/support/download/index.htm

Delays for a given application are simulated according to its specific load conditions as follows:

1. Simulate the desired signal standard with the output driver connected to the test setup shown in Figure 9. Use parameter values $V_T$, $R_T$, and $V_M$ from Table 27. $C_{REF}$ is zero.
2. Record the time to $V_M$.
3. Simulate the same signal standard with the output driver connected to the PCB trace with load. Use the appropriate IBIS model (including $V_{REF}$, $R_{REF}$, $C_{REF}$, and $V_{MEAS}$ values) or capacitive value to represent the load.
4. Record the time to $V_{MEAS}$.
5. Compare the results of steps 2 and 4. Add (or subtract) the increase (or decrease) in delay to (or from) the appropriate Output standard adjustment (Table 26) to yield the worst-case delay of the PCB trace.

## Simultaneously Switching Output Guidelines

This section provides guidelines for the recommended maximum allowable number of Simultaneous Switching Outputs (SSOs). These guidelines describe the maximum number of user I/O pins of a given output signal standard that should simultaneously switch in the same direction, while maintaining a safe level of switching noise. Meeting these guidelines for the stated test conditions ensures that the FPGA operates free from the adverse effects of ground and power bounce.

Ground or power bounce occurs when a large number of outputs simultaneously switch in the same direction. The output drive transistors all conduct current to a common voltage rail. Low-to-High transitions conduct to the $V_{CCO}$ rail; High-to-Low transitions conduct to the GND rail. The resulting cumulative current transient induces a voltage difference across the inductance that exists between the die pad and the power supply or ground return. The inductance is associated with bonding wires, the package lead frame, and any other signal routing inside the package. Other variables contribute to SSO noise levels, including stray inductance on the PCB as well as capacitive loading at receivers. Any SSO-induced voltage consequently affects internal switching noise margins and ultimately signal quality.

Table 28 and Table 29 provide the essential SSO guidelines. For each device/package combination, Table 28 provides the number of equivalent $V_{CCO}$/GND pairs. The equivalent number of pairs is based on characterization and may not match the physical number of pairs. For each output signal standard and drive strength, Table 29 recommends the maximum number of SSOs, switching in the same direction, allowed per $V_{CCO}$/GND pair within an I/O bank. The guidelines in Table 29 are categorized by package style, slew rate, and output drive current. Furthermore, the number of SSOs is specified by I/O bank. Generally, the left and right I/O banks (Banks 1 and 3) support higher output drive current.

Multiply the appropriate numbers from Table 28 and Table 29 to calculate the maximum number of SSOs allowed within an I/O bank. Exceeding these SSO guidelines might result in increased power or ground bounce, degraded signal integrity, or increased system jitter.

$SSO_{MAX}$/IO Bank = Table 28 x Table 29

The recommended maximum SSO values assume that the FPGA is soldered on the printed circuit board and that the board uses sound design practices. The SSO values do not apply for FPGAs mounted in sockets, due to the lead inductance introduced by the socket.

The SSO values assume that the $V_{CCAUX}$ is powered at 3.3V. Setting $V_{CCAUX}$ to 2.5V provides better SSO characteristics.

The number of SSOs allowed for quad-flat packages (VQ/TQ) is lower than for ball grid array packages (FG) due to the larger lead inductance of the quad-flat packages. Ball grid array packages are recommended for applications with a large number of simultaneously switching outputs.

*Table 28:* **Equivalent $V_{CCO}$/GND Pairs per Bank**

| Device | Package Style *(including Pb-free)* | | | | | | |
|---|---|---|---|---|---|---|---|
| | VQ100 | TQ144 | FT256 | FG320 | FG400 | FG484 | FG676 |
| XC3S50A | 1 | 2 | 3 | – | – | – | – |
| XC3S200A | 1 | – | 4 | 4 | – | – | – |
| XC3S400A | – | – | 4 | 4 | 5 | – | – |
| XC3S700A | – | – | 4 | – | 5 | 5 | – |
| XC3S1400A | – | – | 4 | – | – | 6 | 9 |

*Table 29:* **Recommended Number of Simultaneously Switching Outputs per VCCO-GND Pair ($V_{CCAUX}$=3.3V)**

| Signal Standard (IOSTANDARD) | | | Package Type | | | |
|---|---|---|---|---|---|---|
| | | | VQ100, TQ144 | | FT256, FG320, FG400, FG484, FG676 | |
| | | | Top, Bottom (Banks 0,2) | Left, Right (Banks 1,3) | Top, Bottom (Banks 0,2) | Left, Right (Banks 1,3) |
| **Single-Ended Standards** | | | | | | |
| LVTTL | Slow | 2 | 20 | 20 | 60 | 60 |
| | | 4 | 10 | 10 | 41 | 41 |
| | | 6 | 10 | 10 | 29 | 29 |
| | | 8 | 6 | 6 | 22 | 22 |
| | | 12 | 6 | 6 | 13 | 13 |
| | | 16 | 5 | 5 | 11 | 11 |
| | | 24 | 4 | 4 | 9 | 9 |
| | Fast | 2 | 10 | 10 | 10 | 10 |
| | | 4 | 6 | 6 | 6 | 6 |
| | | 6 | 5 | 5 | 5 | 5 |
| | | 8 | 3 | 3 | 3 | 3 |
| | | 12 | 3 | 3 | 3 | 3 |
| | | 16 | 3 | 3 | 3 | 3 |
| | | 24 | 2 | 2 | 2 | 2 |
| | QuietIO | 2 | 40 | 40 | 80 | 80 |
| | | 4 | 24 | 24 | 48 | 48 |
| | | 6 | 20 | 20 | 36 | 36 |
| | | 8 | 16 | 16 | 27 | 27 |
| | | 12 | 12 | 12 | 16 | 16 |
| | | 16 | 9 | 9 | 13 | 13 |
| | | 24 | 9 | 9 | 12 | 12 |

*Table 29:* **Recommended Number of Simultaneously Switching Outputs per VCCO-GND Pair ($V_{CCAUX}$=3.3V)*(Continued)***

| Signal Standard (IOSTANDARD) | | | Package Type | | | |
|---|---|---|---|---|---|---|
| | | | VQ100, TQ144 | | FT256, FG320, FG400, FG484, FG676 | |
| | | | Top, Bottom (Banks 0,2) | Left, Right (Banks 1,3) | Top, Bottom (Banks 0,2) | Left, Right (Banks 1,3) |
| LVCMOS33 | Slow | 2 | 24 | 24 | 76 | 76 |
| | | 4 | 14 | 14 | 46 | 46 |
| | | 6 | 11 | 11 | 27 | 27 |
| | | 8 | 10 | 10 | 20 | 20 |
| | | 12 | 9 | 9 | 13 | 13 |
| | | 16 | 8 | 8 | 10 | 10 |
| | | 24 | – | 8 | – | 9 |
| | Fast | 2 | 10 | 10 | 10 | 10 |
| | | 4 | 8 | 8 | 8 | 8 |
| | | 6 | 5 | 5 | 5 | 5 |
| | | 8 | 4 | 4 | 4 | 4 |
| | | 12 | 4 | 4 | 4 | 4 |
| | | 16 | 2 | 2 | 2 | 2 |
| | | 24 | – | 2 | – | 2 |
| | QuietIO | 2 | 36 | 36 | 76 | 76 |
| | | 4 | 32 | 32 | 46 | 46 |
| | | 6 | 24 | 24 | 32 | 32 |
| | | 8 | 16 | 16 | 26 | 26 |
| | | 12 | 16 | 16 | 18 | 18 |
| | | 16 | 12 | 12 | 14 | 14 |
| | | 24 | – | 10 | – | 10 |

*Table 29:* **Recommended Number of Simultaneously Switching Outputs per VCCO-GND Pair ($V_{CCAUX}$=3.3V)*(Continued)***

| Signal Standard (IOSTANDARD) | | | Package Type | | | |
|---|---|---|---|---|---|---|
| | | | VQ100, TQ144 | | FT256, FG320, FG400, FG484, FG676 | |
| | | | Top, Bottom (Banks 0,2) | Left, Right (Banks 1,3) | Top, Bottom (Banks 0,2) | Left, Right (Banks 1,3) |
| LVCMOS25 | Slow | 2 | 16 | 16 | 76 | 76 |
| | | 4 | 10 | 10 | 46 | 46 |
| | | 6 | 8 | 8 | 33 | 33 |
| | | 8 | 7 | 7 | 24 | 24 |
| | | 12 | 6 | 6 | 18 | 18 |
| | | 16 | – | 6 | – | 11 |
| | | 24 | – | 5 | – | 7 |
| | Fast | 2 | 12 | 12 | 18 | 18 |
| | | 4 | 10 | 10 | 14 | 14 |
| | | 6 | 8 | 8 | 6 | 6 |
| | | 8 | 6 | 6 | 6 | 6 |
| | | 12 | 3 | 3 | 3 | 3 |
| | | 16 | – | 3 | – | 3 |
| | | 24 | – | 2 | – | 2 |
| | QuietIO | 2 | 36 | 36 | 76 | 76 |
| | | 4 | 30 | 30 | 60 | 60 |
| | | 6 | 24 | 24 | 48 | 48 |
| | | 8 | 20 | 20 | 36 | 36 |
| | | 12 | 12 | 12 | 36 | 36 |
| | | 16 | – | 12 | – | 36 |
| | | 24 | – | 8 | – | 8 |
| LVCMOS18 | Slow | 2 | 13 | 13 | 64 | 64 |
| | | 4 | 8 | 8 | 34 | 34 |
| | | 6 | 8 | 8 | 22 | 22 |
| | | 8 | 7 | 7 | 18 | 18 |
| | | 12 | – | 5 | – | 13 |
| | | 16 | – | 5 | – | 10 |
| | Fast | 2 | 13 | 13 | 18 | 18 |
| | | 4 | 8 | 8 | 9 | 9 |
| | | 6 | 7 | 7 | 7 | 7 |
| | | 8 | 4 | 4 | 4 | 4 |
| | | 12 | – | 4 | – | 4 |
| | | 16 | – | 3 | – | 3 |
| | QuietIO | 2 | 30 | 30 | 64 | 64 |
| | | 4 | 24 | 24 | 64 | 64 |
| | | 6 | 20 | 20 | 48 | 48 |
| | | 8 | 16 | 16 | 36 | 36 |
| | | 12 | – | 12 | – | 36 |
| | | 16 | – | 12 | – | 24 |

*Table 29:* **Recommended Number of Simultaneously Switching Outputs per VCCO-GND Pair ($V_{CCAUX}$=3.3V)*(Continued)***

| Signal Standard (IOSTANDARD) | | | Package Type | | | |
|---|---|---|---|---|---|---|
| | | | VQ100, TQ144 | | FT256, FG320, FG400, FG484, FG676 | |
| | | | Top, Bottom (Banks 0,2) | Left, Right (Banks 1,3) | Top, Bottom (Banks 0,2) | Left, Right (Banks 1,3) |
| LVCMOS15 | Slow | 2 | 12 | 12 | 55 | 55 |
| | | 4 | 7 | 7 | 31 | 31 |
| | | 6 | 7 | 7 | 18 | 18 |
| | | 8 | – | 6 | – | 15 |
| | | 12 | – | 5 | – | 10 |
| | Fast | 2 | 10 | 10 | 25 | 25 |
| | | 4 | 7 | 7 | 10 | 10 |
| | | 6 | 6 | 6 | 6 | 6 |
| | | 8 | – | 4 | – | 4 |
| | | 12 | – | 3 | – | 3 |
| | QuietIO | 2 | 30 | 30 | 70 | 70 |
| | | 4 | 21 | 21 | 40 | 40 |
| | | 6 | 18 | 18 | 31 | 31 |
| | | 8 | – | 12 | – | 31 |
| | | 12 | – | 12 | – | 20 |
| LVCMOS12 | Slow | 2 | 17 | 17 | 40 | 40 |
| | | 4 | – | 13 | – | 25 |
| | | 6 | – | 10 | – | 18 |
| | Fast | 2 | 12 | 9 | 31 | 31 |
| | | 4 | – | 9 | – | 13 |
| | | 6 | – | 9 | – | 9 |
| | QuietIO | 2 | 36 | 36 | 55 | 55 |
| | | 4 | – | 33 | – | 36 |
| | | 6 | – | 27 | – | 36 |
| PCI33_3 | | | 9 | 9 | 16 | 16 |
| PCI66_3 | | | – | 9 | – | 13 |
| HSTL_I | | | – | 11 | – | 20 |
| HSTL_III | | | – | 7 | – | 8 |
| HSTL_I_18 | | | 13 | 13 | 17 | 17 |
| HSTL_II_18 | | | – | 5 | – | 5 |
| HSTL_III_18 | | | 8 | 8 | 10 | 8 |
| SSTL18_I | | | 7 | 13 | 7 | 15 |
| SSTL18_II | | | – | 9 | – | 9 |
| SSTL2_I | | | 10 | 10 | 18 | 18 |
| SSTL2_II | | | – | 6 | – | 9 |
| SSTL3_I | | | 7 | 8 | 8 | 10 |
| SSTL3_II | | | 5 | 6 | 6 | 7 |

*Table 29:* **Recommended Number of Simultaneously Switching Outputs per VCCO-GND Pair ($V_{CCAUX}$=3.3V)*(Continued)***

| Signal Standard (IOSTANDARD) | Package Type | | | |
|---|---|---|---|---|
| | VQ100, TQ144 | | FT256, FG320, FG400, FG484, FG676 | |
| | Top, Bottom (Banks 0,2) | Left, Right (Banks 1,3) | Top, Bottom (Banks 0,2) | Left, Right (Banks 1,3) |
| **Differential Standards (Number of I/O *Pairs* or Channels)** | | | | |
| LVDS_25 | 8 | – | 22 | – |
| LVDS_33 | 8 | – | 27 | – |
| BLVDS_25 | 1 | 1 | 4 | 4 |
| MINI_LVDS_25 | 8 | – | 22 | – |
| MINI_LVDS_33 | 8 | – | 27 | – |
| LVPECL_25 | Input Only | | | |
| LVPECL_33 | Input Only | | | |
| RSDS_25 | 8 | – | 22 | – |
| RSDS_33 | 8 | – | 27 | – |
| TMDS_33 | 8 | – | 27 | – |
| PPDS_25 | 8 | – | 22 | – |
| PPDS_33 | 8 | – | 27 | – |
| DIFF_HSTL_I | – | 5 | – | 10 |
| DIFF_HSTL_III | – | 3 | – | 4 |
| DIFF_HSTL_I_18 | 6 | 6 | 8 | 8 |
| DIFF_HSTL_II_18 | – | 2 | – | 2 |
| DIFF_HSTL_III_18 | 4 | 4 | 5 | 4 |
| DIFF_SSTL18_I | 3 | 6 | 3 | 7 |
| DIFF_SSTL18_II | – | 4 | – | 4 |
| DIFF_SSTL2_I | 5 | 5 | 9 | 9 |
| DIFF_SSTL2_II | – | 3 | – | 4 |
| DIFF_SSTL3_I | 3 | 4 | 4 | 5 |
| DIFF_SSTL3_II | 2 | 3 | 3 | 3 |

**Notes:**

1. Not all I/O standards are supported on all I/O banks. The left and right banks (I/O banks 1 and 3) support higher output drive current than the top and bottom banks (I/O banks 0 and 2). Similarly, true differential output standards, such as LVDS, RSDS, PPDS, miniLVDS, and TMDS, are only supported in top or bottom banks (I/O banks 0 and 2). Refer to UG331: *Spartan-3 Generation FPGA User Guide* for additional information.
2. The numbers in this table are recommendations that assume sound board lay out practice. Test limits are the $V_{IL}/V_{IH}$ voltage limits for the respective I/O standard.
3. If more than one signal standard is assigned to the I/Os of a given bank, refer to XAPP689: *Managing Ground Bounce in Large FPGAs* for information on how to perform weighted average SSO calculations.

## Configurable Logic Block (CLB) Timing

*Table 30:* **CLB (SLICEM) Timing**

| Symbol | Description | Speed Grade | | | | Units |
|---|---|---|---|---|---|---|
| | | -5 | | -4 | | |
| | | Min | Max | Min | Max | |
| **Clock-to-Output Times** | | | | | | |
| $T_{CKO}$ | When reading from the FFX (FFY) Flip-Flop, the time from the active transition at the CLK input to data appearing at the XQ (YQ) output | – | 0.60 | – | 0.68 | ns |
| **Setup Times** | | | | | | |
| $T_{AS}$ | Time from the setup of data at the F or G input to the active transition at the CLK input of the CLB | 0.18 | – | 0.36 | – | ns |
| $T_{DICK}$ | Time from the setup of data at the BX or BY input to the active transition at the CLK input of the CLB | 1.58 | – | 1.88 | – | ns |
| **Hold Times** | | | | | | |
| $T_{AH}$ | Time from the active transition at the CLK input to the point where data is last held at the F or G input | 0 | – | 0 | – | ns |
| $T_{CKDI}$ | Time from the active transition at the CLK input to the point where data is last held at the BX or BY input | 0 | – | 0 | – | ns |
| **Clock Timing** | | | | | | |
| $T_{CH}$ | The High pulse width of the CLB's CLK signal | 0.63 | – | 0.75 | – | ns |
| $T_{CL}$ | The Low pulse width of the CLK signal | 0.63 | – | 0.75 | – | ns |
| $F_{TOG}$ | Toggle frequency (for export control) | 0 | 770 | 0 | 667 | MHz |
| **Propagation Times** | | | | | | |
| $T_{ILO}$ | The time it takes for data to travel from the CLB's F (G) input to the X (Y) output | – | 0.62 | – | 0.71 | ns |
| **Set/Reset Pulse Width** | | | | | | |
| $T_{RPW_CLB}$ | The minimum allowable pulse width, High or Low, to the CLB's SR input | 1.33 | – | 1.61 | – | ns |

**Notes:**

1. The numbers in this table are based on the operating conditions set forth in Table 8.

*Table 31:* **CLB Distributed RAM Switching Characteristics**

| Symbol | Description | -5 | | -4 | | Units |
|---|---|---|---|---|---|---|
| | | Min | Max | Min | Max | |
| **Clock-to-Output Times** | | | | | | |
| $T_{SHCKO}$ | Time from the active edge at the CLK input to data appearing on the distributed RAM output | – | 1.69 | – | 2.01 | ns |
| **Setup Times** | | | | | | |
| $T_{DS}$ | Setup time of data at the BX or BY input before the active transition at the CLK input of the distributed RAM | –0.07 | – | –0.02 | – | ns |
| $T_{AS}$ | Setup time of the F/G address inputs before the active transition at the CLK input of the distributed RAM | 0.18 | – | 0.36 | – | ns |
| $T_{WS}$ | Setup time of the write enable input before the active transition at the CLK input of the distributed RAM | 0.30 | – | 0.59 | – | ns |
| **Hold Times** | | | | | | |
| $T_{DH}$ | Hold time of the BX and BY data inputs after the active transition at the CLK input of the distributed RAM | 0.13 | – | 0.13 | – | ns |
| $T_{AH}$, $T_{WH}$ | Hold time of the F/G address inputs or the write enable input after the active transition at the CLK input of the distributed RAM | 0.01 | – | 0.01 | – | ns |
| **Clock Pulse Width** | | | | | | |
| $T_{WPH}$, $T_{WPL}$ | Minimum High or Low pulse width at CLK input | 0.88 | – | 1.01 | – | ns |

**Notes:**

1. The numbers in this table are based on the operating conditions set forth in Table 8.

*Table 32:* **CLB Shift Register Switching Characteristics**

| Symbol | Description | -5 | | -4 | | Units |
|---|---|---|---|---|---|---|
| | | Min | Max | Min | Max | |
| **Clock-to-Output Times** | | | | | | |
| $T_{REG}$ | Time from the active edge at the CLK input to data appearing on the shift register output | – | 4.11 | – | 4.82 | ns |
| **Setup Times** | | | | | | |
| $T_{SRLDS}$ | Setup time of data at the BX or BY input before the active transition at the CLK input of the shift register | 0.13 | – | 0.18 | – | ns |
| **Hold Times** | | | | | | |
| $T_{SRLDH}$ | Hold time of the BX or BY data input after the active transition at the CLK input of the shift register | 0.16 | – | 0.16 | – | ns |
| **Clock Pulse Width** | | | | | | |
| $T_{WPH}$, $T_{WPL}$ | Minimum High or Low pulse width at CLK input | 0.90 | – | 1.01 | – | ns |

**Notes:**

1. The numbers in this table are based on the operating conditions set forth in Table 8.

## Clock Buffer/Multiplexer Switching Characteristics

*Table 33:* **Clock Distribution Switching Characteristics**

| Description | Symbol | Minimum | Maximum Speed Grade -5 | Maximum Speed Grade -4 | Units |
|---|---|---|---|---|---|
| Global clock buffer (BUFG, BUFGMUX, BUFGCE) I input to O-output delay | $T_{GIO}$ | – | 0.22 | 0.23 | ns |
| Global clock multiplexer (BUFGMUX) select S-input setup to I0 and I1 inputs. Same as BUFGCE enable CE-input | $T_{GSI}$ | – | 0.56 | 0.63 | ns |
| Frequency of signals distributed on global buffers (all sides) | $F_{BUFG}$ | 0 | 350 | 334 | MHz |

**Notes:**

1. The numbers in this table are based on the operating conditions set forth in Table 8.

## 18 x 18 Embedded Multiplier Timing

*Table 34:* **18 x 18 Embedded Multiplier Timing**

| Symbol | Description | Speed Grade | | | | Units |
|---|---|---|---|---|---|---|
| | | -5 | | -4 | | |
| | | Min | Max | Min | Max | |
| **Combinatorial Delay** | | | | | | |
| $T_{MULT}$ | Combinational multiplier propagation delay from the A and B inputs to the P outputs, assuming 18-bit inputs and a 36-bit product (AREG, BREG, and PREG registers unused) | – | 4.36 | – | 4.88 | ns |
| **Clock-to-Output Times** | | | | | | |
| $T_{MSCKP_P}$ | Clock-to-output delay from the active transition of the CLK input to valid data appearing on the P outputs when using the PREG register(2,3) | – | 0.84 | – | 1.30 | ns |
| $T_{MSCKP_A}$ $T_{MSCKP_B}$ | Clock-to-output delay from the active transition of the CLK input to valid data appearing on the P outputs when using either the AREG or BREG register(2,4) | – | 4.44 | – | 4.97 | ns |
| **Setup Times** | | | | | | |
| $T_{MSDCK_P}$ | Data setup time at the A or B input before the active transition at the CLK when using only the PREG output register (AREG, BREG registers unused)(3) | 3.56 | – | 3.98 | – | ns |
| $T_{MSDCK_A}$ | Data setup time at the A input before the active transition at the CLK when using the AREG input register(4) | 0.00 | – | 0.00 | – | ns |
| $T_{MSDCK_B}$ | Data setup time at the B input before the active transition at the CLK when using the BREG input register(4) | 0.00 | – | 0.00 | – | ns |
| **Hold Times** | | | | | | |
| $T_{MSCKD_P}$ | Data hold time at the A or B input after the active transition at the CLK when using only the PREG output register (AREG, BREG registers unused)(3) | 0.00 | – | 0.00 | – | ns |
| $T_{MSCKD_A}$ | Data hold time at the A input after the active transition at the CLK when using the AREG input register(4) | 0.35 | – | 0.45 | – | ns |
| $T_{MSCKD_B}$ | Data hold time at the B input after the active transition at the CLK when using the BREG input register(4) | 0.35 | – | 0.45 | – | ns |
| **Clock Frequency** | | | | | | |
| $F_{MULT}$ | Internal operating frequency for a two-stage 18x18 multiplier using the AREG and BREG input registers and the PREG output register(1) | 0 | 280 | 0 | 250 | MHz |

**Notes:**

1. Combinational delay is less and pipelined performance is higher when multiplying input data with less than 18 bits.
2. The PREG register is typically used in both single-stage and two-stage pipelined multiplier implementations.
3. The PREG register is typically used when inferring a single-stage multiplier.
4. Input registers AREG or BREG are typically used when inferring a two-stage multiplier.
5. The numbers in this table are based on the operating conditions set forth in Table 8.

## Block RAM Timing

*Table 35:* **Block RAM Timing**

| Symbol | Description | Speed Grade | | | | Units |
|---|---|---|---|---|---|---|
| | | -5 | | -4 | | |
| | | Min | Max | Min | Max | |
| **Clock-to-Output Times** | | | | | | |
| $T_{RCKO}$ | When reading from block RAM, the delay from the active transition at the CLK input to data appearing at the DOUT output | – | 2.06 | – | 2.49 | ns |
| **Setup Times** | | | | | | |
| $T_{RCCK_ADDR}$ | Setup time for the ADDR inputs before the active transition at the CLK input of the block RAM | 0.32 | – | 0.36 | – | ns |
| $T_{RDCK_DIB}$ | Setup time for data at the DIN inputs before the active transition at the CLK input of the block RAM | 0.28 | – | 0.31 | – | ns |
| $T_{RCCK_ENB}$ | Setup time for the EN input before the active transition at the CLK input of the block RAM | 0.69 | – | 0.77 | – | ns |
| $T_{RCCK_WEB}$ | Setup time for the WE input before the active transition at the CLK input of the block RAM | 1.12 | – | 1.26 | – | ns |
| **Hold Times** | | | | | | |
| $T_{RCKC_ADDR}$ | Hold time on the ADDR inputs after the active transition at the CLK input | 0 | – | 0 | – | ns |
| $T_{RCKD_DIB}$ | Hold time on the DIN inputs after the active transition at the CLK input | 0 | – | 0 | – | ns |
| $T_{RCKC_ENB}$ | Hold time on the EN input after the active transition at the CLK input | 0 | – | 0 | – | ns |
| $T_{RCKC_WEB}$ | Hold time on the WE input after the active transition at the CLK input | 0 | – | 0 | – | ns |
| **Clock Timing** | | | | | | |
| $T_{BPWH}$ | High pulse width of the CLK signal | 1.56 | – | 1.79 | – | ns |
| $T_{BPWL}$ | Low pulse width of the CLK signal | 1.56 | – | 1.79 | – | ns |
| **Clock Frequency** | | | | | | |
| $F_{BRAM}$ | Block RAM clock frequency | 0 | 320 | 0 | 280 | MHz |

**Notes:**

1. The numbers in this table are based on the operating conditions set forth in Table 8.

## Digital Clock Manager (DCM) Timing

For specification purposes, the DCM consists of three key components: the Delay-Locked Loop (DLL), the Digital Frequency Synthesizer (DFS), and the Phase Shifter (PS).

Aspects of DLL operation play a role in all DCM applications. All such applications inevitably use the CLKIN and the CLKFB inputs connected to either the CLK0 or the CLK2X feedback, respectively. Thus, specifications in the DLL tables (Table 36 and Table 37) apply to any application that only employs the DLL component. When the DFS and/or the PS components are used together with the DLL, then the specifications listed in the DFS and PS tables (Table 38 through Table 41) supersede any corresponding ones in the DLL tables. DLL specifications that do not change with the addition of DFS or PS functions are presented in Table 36 and Table 37.

Period jitter and cycle-cycle jitter are two of many different ways of specifying clock jitter. Both specifications describe statistical variation from a mean value.

Period jitter is the worst-case deviation from the ideal clock period over a collection of millions of samples. In a histogram of period jitter, the mean value is the clock period.

Cycle-cycle jitter is the worst-case difference in clock period between adjacent clock cycles in the collection of clock periods sampled. In a histogram of cycle-cycle jitter, the mean value is zero.

### Spread Spectrum

DCMs accept typical spread spectrum clocks as long as they meet the input requirements. The DLL will track the frequency changes created by the spread spectrum clock to drive the global clocks to the FPGA logic. See XAPP469, *Spread-Spectrum Clocking Reception for Displays* for details.

### Delay-Locked Loop (DLL)

*Table 36:* **Recommended Operating Conditions for the DLL**

| Symbol | | Description | | Speed Grade -5 Min | Speed Grade -5 Max | Speed Grade -4 Min | Speed Grade -4 Max | Units |
|---|---|---|---|---|---|---|---|---|
| **Input Frequency Ranges** | | | | | | | | |
| $F_{CLKIN}$ | CLKIN_FREQ_DLL | Frequency of the CLKIN clock input | | 5(2) | 280(3) | 5(2) | 250(3) | MHz |
| **Input Pulse Requirements** | | | | | | | | |
| CLKIN_PULSE | | CLKIN pulse width as a percentage of the CLKIN period | $F_{CLKIN} \leq 150$ MHz | 40% | 60% | 40% | 60% | – |
| | | | $F_{CLKIN} > 150$ MHz | 45% | 55% | 45% | 55% | – |
| **Input Clock Jitter Tolerance and Delay Path Variation(4)** | | | | | | | | |
| CLKIN_CYC_JITT_DLL_LF | | Cycle-to-cycle jitter at the CLKIN input | $F_{CLKIN} \leq 150$ MHz | – | ±300 | – | ±300 | ps |
| CLKIN_CYC_JITT_DLL_HF | | | $F_{CLKIN} > 150$ MHz | – | ±150 | – | ±150 | ps |
| CLKIN_PER_JITT_DLL | | Period jitter at the CLKIN input | | – | ±1 | – | ±1 | ns |
| CLKFB_DELAY_VAR_EXT | | Allowable variation of off-chip feedback delay from the DCM output to the CLKFB input | | – | ±1 | – | ±1 | ns |

**Notes:**

1. DLL specifications apply when any of the DLL outputs (CLK0, CLK90, CLK180, CLK270, CLK2X, CLK2X180, or CLKDV) are in use.
2. The DFS, when operating independently of the DLL, supports lower FCLKIN frequencies. See Table 38.
3. To support double the maximum effective FCLKIN limit, set the CLKIN_DIVIDE_BY_2 attribute to TRUE. This attribute divides the incoming clock frequency by two as it enters the DCM. The CLK2X output reproduces the clock frequency provided on the CLKIN input.
4. CLKIN input jitter beyond these limits might cause the DCM to lose lock.
5. The DCM specifications are guaranteed when both adjacent DCMs are locked.

*Table 37:* **Switching Characteristics for the DLL**

| Symbol | Description | | Device | Speed Grade -5 Min | Speed Grade -5 Max | Speed Grade -4 Min | Speed Grade -4 Max | Units |
|---|---|---|---|---|---|---|---|---|
| **Output Frequency Ranges** | | | | | | | | |
| CLKOUT_FREQ_CLK0 | Frequency for the CLK0 and CLK180 outputs | | All | 5 | 280 | 5 | 250 | MHz |
| CLKOUT_FREQ_CLK90 | Frequency for the CLK90 and CLK270 outputs | | | 5 | 200 | 5 | 200 | MHz |
| CLKOUT_FREQ_2X | Frequency for the CLK2X and CLK2X180 outputs | | | 10 | 334 | 10 | 334 | MHz |
| CLKOUT_FREQ_DV | Frequency for the CLKDV output | | | 0.3125 | 186 | 0.3125 | 166 | MHz |
| **Output Clock Jitter(2,3,4)** | | | | | | | | |
| CLKOUT_PER_JITT_0 | Period jitter at the CLK0 output | | All | – | ±100 | – | ±100 | ps |
| CLKOUT_PER_JITT_90 | Period jitter at the CLK90 output | | | – | ±150 | – | ±150 | ps |
| CLKOUT_PER_JITT_180 | Period jitter at the CLK180 output | | | – | ±150 | – | ±150 | ps |
| CLKOUT_PER_JITT_270 | Period jitter at the CLK270 output | | | – | ±150 | – | ±150 | ps |
| CLKOUT_PER_JITT_2X | Period jitter at the CLK2X and CLK2X180 outputs | | | – | ±[0.5% of CLKIN period + 100] | – | ±[0.5% of CLKIN period + 100] | ps |
| CLKOUT_PER_JITT_DV1 | Period jitter at the CLKDV output when performing integer division | | | – | ±150 | – | ±150 | ps |
| CLKOUT_PER_JITT_DV2 | Period jitter at the CLKDV output when performing non-integer division | | | – | ±[0.5% of CLKIN period + 100] | – | ±[0.5% of CLKIN period + 100] | ps |
| **Duty Cycle(4)** | | | | | | | | |
| CLKOUT_DUTY_CYCLE_DLL | Duty cycle variation for the CLK0, CLK90, CLK180, CLK270, CLK2X, CLK2X180, and CLKDV outputs, including the BUFGMUX and clock tree duty-cycle distortion | | All | – | ±[1% of CLKIN period + 350] | – | ±[1% of CLKIN period + 350] | ps |
| **Phase Alignment(4)** | | | | | | | | |
| CLKIN_CLKFB_PHASE | Phase offset between the CLKIN and CLKFB inputs | | All | – | ±150 | – | ±150 | ps |
| CLKOUT_PHASE_DLL | Phase offset between DLL outputs | CLK0 to CLK2X (not CLK2X180) | | – | ±[1% of CLKIN period + 100] | – | ±[1% of CLKIN period + 100] | ps |
| | | All others | | – | ±[1% of CLKIN period + 150] | – | ±[1% of CLKIN period + 150] | ps |
| **Lock Time** | | | | | | | | |
| LOCK_DLL(3) | When using the DLL alone: The time from deassertion at the DCM's Reset input to the rising transition at its LOCKED output. When the DCM is locked, the CLKIN and CLKFB signals are in phase | 5 MHz ≤ $F_{CLKIN}$ ≤ 15 MHz | All | – | 5 | – | 5 | ms |
| | | $F_{CLKIN}$ > 15 MHz | | – | 600 | – | 600 | µs |
| **Delay Lines** | | | | | | | | |
| DCM_DELAY_STEP(5) | Finest delay resolution, averaged over all steps | | All | 15 | 35 | 15 | 35 | ps |

**Notes:**

1. The numbers in this table are based on the operating conditions set forth in Table 8 and Table 36.
2. Indicates the maximum amount of output jitter that the DCM adds to the jitter on the CLKIN input.
3. For optimal jitter tolerance and faster lock time, use the CLKIN_PERIOD attribute.
4. Some jitter and duty-cycle specifications include 1% of input clock period or 0.01 UI. For example, the data sheet specifies a maximum jitter of "±[1% of CLKIN period + 150]". Assume the CLKIN frequency is 100 MHz. The equivalent CLKIN period is 10 ns and 1% of 10 ns is 0.1 ns or 100 ps. According to the data sheet, the maximum jitter is ±[100 ps + 150 ps] = ±250ps.
5. The typical delay step size is 23 ps.

## Digital Frequency Synthesizer (DFS)

*Table 38:* **Recommended Operating Conditions for the DFS**

| Symbol | | Description | | Speed Grade -5 Min | Speed Grade -5 Max | Speed Grade -4 Min | Speed Grade -4 Max | Units |
|---|---|---|---|---|---|---|---|---|
| **Input Frequency Ranges(2)** | | | | | | | | |
| $F_{CLKIN}$ | CLKIN_FREQ_FX | Frequency for the CLKIN input | | 0.200 | 333(4) | 0.200 | 333(4) | MHz |
| **Input Clock Jitter Tolerance(3)** | | | | | | | | |
| CLKIN_CYC_JITT_FX_LF | | Cycle-to-cycle jitter at the CLKIN input, based on CLKFX output frequency | $F_{CLKFX} \leq 150$ MHz | – | ±300 | – | ±300 | ps |
| CLKIN_CYC_JITT_FX_HF | | | $F_{CLKFX} > 150$ MHz | – | ±150 | – | ±150 | ps |
| CLKIN_PER_JITT_FX | | Period jitter at the CLKIN input | | – | ±1 | – | ±1 | ns |

**Notes:**

1. DFS specifications apply when either of the DFS outputs (CLKFX or CLKFX180) are used.
2. If both DFS and DLL outputs are used on the same DCM, follow the more restrictive CLKIN_FREQ_DLL specifications in Table 36.
3. CLKIN input jitter beyond these limits may cause the DCM to lose lock.
4. To support double the maximum effective FCLKIN limit, set the CLKIN_DIVIDE_BY_2 attribute to TRUE. This attribute divides the incoming clock frequency by two as it enters the DCM.

*Table 39:* **Switching Characteristics for the DFS**

| Symbol | Description | | Device | Speed Grade -5 Min | Speed Grade -5 Max | Speed Grade -4 Min | Speed Grade -4 Max | Units |
|---|---|---|---|---|---|---|---|---|
| **Output Frequency Ranges** | | | | | | | | |
| CLKOUT_FREQ_FX(2) | Frequency for the CLKFX and CLKFX180 outputs | | All | 5 | 350 | 5 | 320 | MHz |
| **Output Clock Jitter(3,4)** | | | | | | | | |
| CLKOUT_PER_JITT_FX | Period jitter at the CLKFX and CLKFX180 outputs. | | All | **Typ** | **Max** | **Typ** | **Max** | |
| | | CLKIN ≤ 20 MHz | | Use the Spartan-3A Jitter Calculator: www.xilinx.com/support/documentation/data_sheets/s3a_jitter_calc.zip | | | | ps |
| | | CLKIN > 20 MHz | | ±[1% of CLKFX period + 100] | ±[1% of CLKFX period + 200] | ±[1% of CLKFX period + 100] | ±[1% of CLKFX period + 200] | ps |
| **Duty Cycle(5,6)** | | | | | | | | |
| CLKOUT_DUTY_CYCLE_FX | Duty cycle precision for the CLKFX and CLKFX180 outputs, including the BUFGMUX and clock tree duty-cycle distortion | | All | – | ±[1% of CLKFX period + 350] | – | ±[1% of CLKFX period + 350] | ps |
| **Phase Alignment(6)** | | | | | | | | |
| CLKOUT_PHASE_FX | Phase offset between the DFS CLKFX output and the DLL CLK0 output when both the DFS and DLL are used | | All | – | ±200 | – | ±200 | ps |
| CLKOUT_PHASE_FX180 | Phase offset between the DFS CLKFX180 output and the DLL CLK0 output when both the DFS and DLL are used | | All | – | ±[1% of CLKFX period + 200] | – | ±[1% of CLKFX period + 200] | ps |

*Table 39:* **Switching Characteristics for the DFS*(Continued)***

| Symbol | Description | | Device | Speed Grade -5 Min | Speed Grade -5 Max | Speed Grade -4 Min | Speed Grade -4 Max | Units |
|---|---|---|---|---|---|---|---|---|
| **Lock Time** | | | | | | | | |
| LOCK_FX(2, 3) | The time from deassertion at the DCM's Reset input to the rising transition at its LOCKED output. The DFS asserts LOCKED when the CLKFX and CLKFX180 signals are valid. If using both the DLL and the DFS, use the longer locking time. | 5 MHz ≤ $F_{CLKIN}$ ≤ 15 MHz | All | – | 5 | – | 5 | ms |
| | | $F_{CLKIN}$ > 15 MHz | | – | 450 | – | 450 | µs |

**Notes:**
1. The numbers in this table are based on the operating conditions set forth in Table 8 and Table 38.
2. DFS performance requires the additional logic automatically added by ISE 9.1i and later software revisions.
3. For optimal jitter tolerance and faster lock time, use the CLKIN_PERIOD attribute.
4. Maximum output jitter is characterized within a reasonable noise environment (150 ps input period jitter, 40 SSOs and 25% CLB switching) on an XC3S1400A FPGA. Output jitter strongly depends on the environment, including the number of SSOs, the output drive strength, CLB utilization, CLB switching activities, switching frequency, power supply and PCB design. The actual maximum output jitter depends on the system application.
5. The CLKFX and CLKFX180 outputs always have an approximate 50% duty cycle.
6. Some duty-cycle and alignment specifications include a percentage of the CLKFX output period. For example, the data sheet specifies a maximum CLKFX jitter of "±[1% of CLKFX period + 200]". Assume the CLKFX output frequency is 100 MHz. The equivalent CLKFX period is 10 ns and 1% of 10 ns is 0.1 ns or 100 ps. According to the data sheet, the maximum jitter is ±[100 ps + 200 ps] = ±300 ps.

## Phase Shifter (PS)

*Table 40:* **Recommended Operating Conditions for the PS in Variable Phase Mode**

| Symbol | Description | Speed Grade | | | | Units |
|---|---|---|---|---|---|---|
| | | -5 | | -4 | | |
| | | Min | Max | Min | Max | |
| **Operating Frequency Ranges** | | | | | | |
| PSCLK_FREQ ($F_{PSCLK}$) | Frequency for the PSCLK input | 1 | 167 | 1 | 167 | MHz |
| **Input Pulse Requirements** | | | | | | |
| PSCLK_PULSE | PSCLK pulse width as a percentage of the PSCLK period | 40% | 60% | 40% | 60% | - |

*Table 41:* **Switching Characteristics for the PS in Variable Phase Mode**

| Symbol | Description | | Phase Shift Amount | Units |
|---|---|---|---|---|
| **Phase Shifting Range** | | | | |
| MAX_STEPS(2) | Maximum allowed number of DCM_DELAY_STEP steps for a given CLKIN clock period, where T = CLKIN clock period in ns. If using CLKIN_DIVIDE_BY_2 = TRUE, double the clock effective clock period. | CLKIN < 60 MHz | ±[INTEGER(10 • ($T_{CLKIN}$ – 3 ns))] | steps |
| | | CLKIN ≥ 60 MHz | ±[INTEGER(15 • ($T_{CLKIN}$ – 3 ns))] | |
| FINE_SHIFT_RANGE_MIN | Minimum guaranteed delay for variable phase shifting | | ±[MAX_STEPS • DCM_DELAY_STEP_MIN] | ns |
| FINE_SHIFT_RANGE_MAX | Maximum guaranteed delay for variable phase shifting | | ±[MAX_STEPS • DCM_DELAY_STEP_MAX] | ns |

**Notes:**
1. The numbers in this table are based on the operating conditions set forth in Table 8 and Table 40.
2. The maximum variable phase shift range, MAX_STEPS, is only valid when the DCM is has no initial fixed phase shifting, that is, the PHASE_SHIFT attribute is set to 0.
3. The DCM_DELAY_STEP values are provided at the bottom of Table 37.

### Miscellaneous DCM Timing

*Table 42:* **Miscellaneous DCM Timing**

| Symbol | Description | Min | Max | Units |
|---|---|---|---|---|
| DCM_RST_PW_MIN | Minimum duration of a RST pulse width | 3 | – | CLKIN cycles |
| DCM_RST_PW_MAX(2) | Maximum duration of a RST pulse width | N/A | N/A | seconds |
| | | N/A | N/A | seconds |
| DCM_CONFIG_LAG_TIME(3) | Maximum duration from $V_{CCINT}$ applied to FPGA configuration successfully completed (DONE pin goes High) and clocks applied to DCM DLL | N/A | N/A | minutes |
| | | N/A | N/A | minutes |

**Notes:**

1. This limit only applies to applications that use the DCM DLL outputs (CLK0, CLK90, CLK180, CLK270, CLK2X, CLK2X180, and CLKDV). The DCM DFS outputs (CLKFX, CLKFX180) are unaffected.
2. This specification is equivalent to the Virtex®-4 DCM_RESET specification. This specification does not apply for Spartan-3A FPGAs.
3. This specification is equivalent to the Virtex-4 TCONFIG specification. This specification does not apply for Spartan-3A FPGAs.

## DNA Port Timing

*Table 43:* **DNA_PORT Interface Timing**

| Symbol | Description | Min | Max | Units |
|---|---|---|---|---|
| $T_{DNASSU}$ | Setup time on SHIFT before the rising edge of CLK | 1.0 | – | ns |
| $T_{DNASH}$ | Hold time on SHIFT after the rising edge of CLK | 0.5 | – | ns |
| $T_{DNADSU}$ | Setup time on DIN before the rising edge of CLK | 1.0 | – | ns |
| $T_{DNADH}$ | Hold time on DIN after the rising edge of CLK | 0.5 | – | ns |
| $T_{DNARSU}$ | Setup time on READ before the rising edge of CLK | 5.0 | 10,000 | ns |
| $T_{DNARH}$ | Hold time on READ after the rising edge of CLK | 0 | – | ns |
| $T_{DNADCKO}$ | Clock-to-output delay on DOUT after rising edge of CLK | 0.5 | 1.5 | ns |
| $T_{DNACLKF}$ | CLK frequency | 0 | 100 | MHz |
| $T_{DNACLKH}$ | CLK High time | 1.0 | ∞ | ns |
| $T_{DNACLKL}$ | CLK Low time | 1.0 | ∞ | ns |

**Notes:**

1. The minimum READ pulse width is 5 ns, the maximum READ pulse width is 10 µs.
2. The numbers in this table are based on the operating conditions set forth in Table 8.

## Suspend Mode Timing

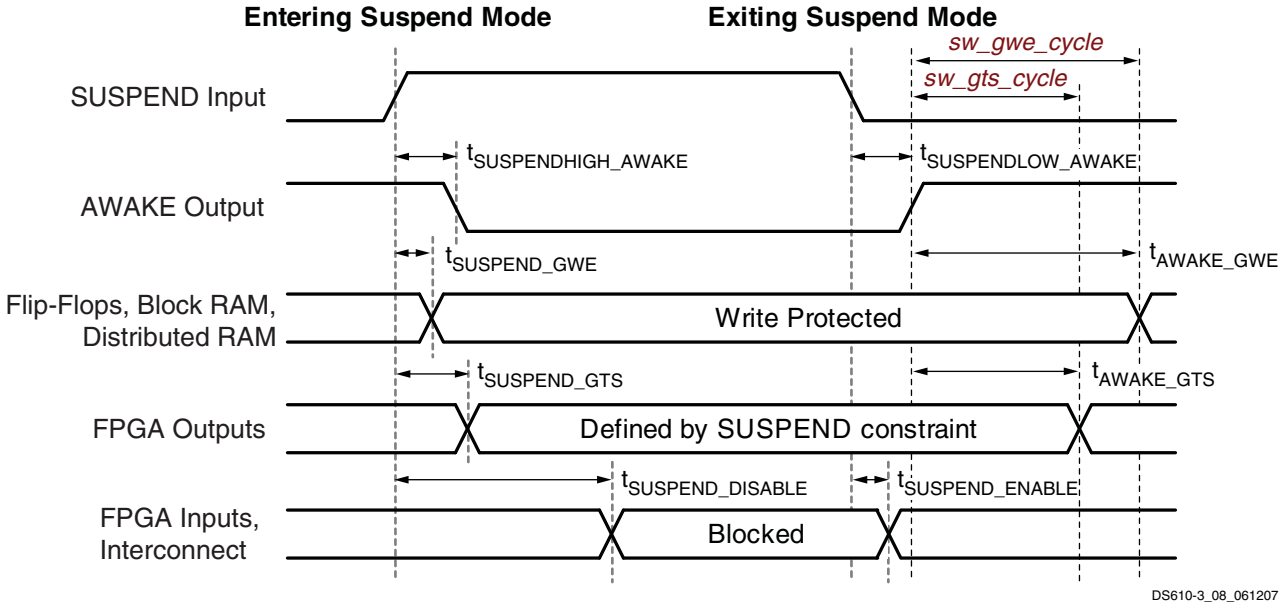


*Figure 10:* **Suspend Mode Timing**

*Table 44:* **Suspend Mode Timing Parameters**

| Symbol | Description | Min | Typ | Max | Units |
|---|---|---|---|---|---|
| **Entering Suspend Mode** | | | | | |
| $T_{SUSPENDHIGH_AWAKE}$ | Rising edge of SUSPEND pin to falling edge of AWAKE pin without glitch filter (***suspend_filter:No***) | – | 7 | – | ns |
| $T_{SUSPENDFILTER}$ | Adjustment to SUSPEND pin rising edge parameters when glitch filter enabled (***suspend_filter:Yes***) | +160 | +300 | +600 | ns |
| $T_{SUSPEND_GTS}$ | Rising edge of SUSPEND pin until FPGA output pins drive their defined SUSPEND constraint behavior | – | 10 | – | ns |
| $T_{SUSPEND_GWE}$ | Rising edge of SUSPEND pin to write-protect lock on all writable clocked elements | – | <5 | – | ns |
| $T_{SUSPEND_DISABLE}$ | Rising edge of the SUSPEND pin to FPGA input pins and interconnect disabled | – | 340 | – | ns |
| **Exiting Suspend Mode** | | | | | |
| $T_{SUSPENDLOW_AWAKE}$ | Falling edge of the SUSPEND pin to rising edge of the AWAKE pin. Does not include DCM lock time. | – | 4 to 108 | – | µs |
| $T_{SUSPEND_ENABLE}$ | Falling edge of the SUSPEND pin to FPGA input pins and interconnect re-enabled | – | 3.7 to 109 | – | µs |
| $T_{AWAKE_GWE1}$ | Rising edge of the AWAKE pin until write-protect lock released on all writable clocked elements, using ***sw_clk:InternalClock*** and ***sw_gwe_cycle:1***. | – | 67 | – | ns |
| $T_{AWAKE_GWE512}$ | Rising edge of the AWAKE pin until write-protect lock released on all writable clocked elements, using ***sw_clk:InternalClock*** and ***sw_gwe_cycle:512***. | – | 14 | – | µs |
| $T_{AWAKE_GTS1}$ | Rising edge of the AWAKE pin until outputs return to the behavior described in the FPGA application, using ***sw_clk:InternalClock*** and ***sw_gts_cycle:1***. | – | 57 | – | ns |
| $T_{AWAKE_GTS512}$ | Rising edge of the AWAKE pin until outputs return to the behavior described in the FPGA application, using ***sw_clk:InternalClock*** and ***sw_gts_cycle:512***. | – | 14 | – | µs |

**Notes:**

1. These parameters based on characterization.
2. For information on using the Spartan-3A Suspend feature, see XAPP480: *Using Suspend Mode in Spartan-3 Generation FPGAs*.

# Configuration and JTAG Timing

## General Configuration Power-On/Reconfigure Timing

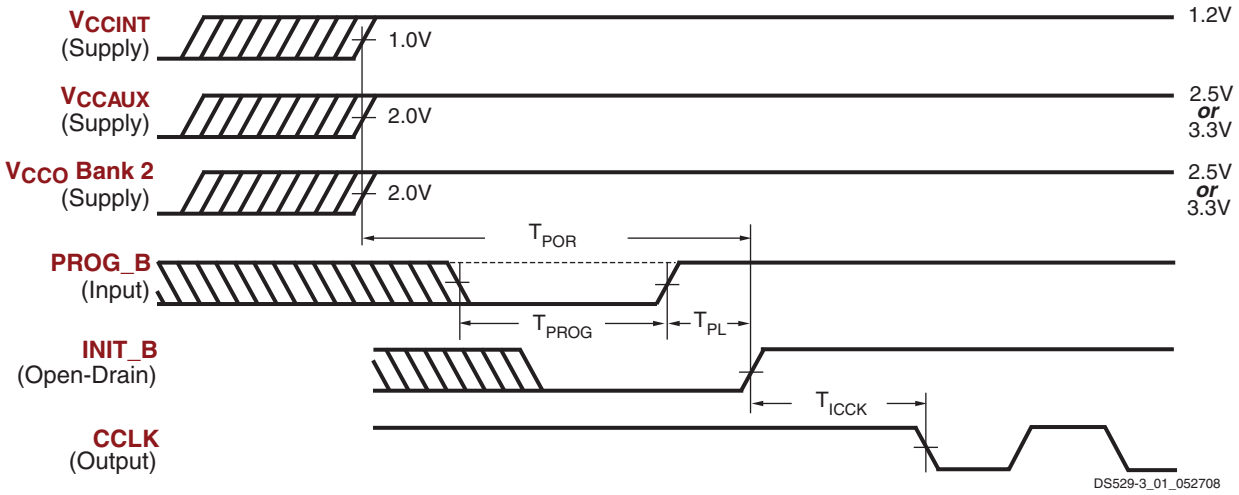


**Notes:**

1. The $V_{CCINT}$, $V_{CCAUX}$, and $V_{CCO}$ supplies can be applied in any order.
2. The Low-going pulse on PROG_B is optional after power-on but necessary for reconfiguration without a power cycle.
3. The rising edge of INIT_B samples the voltage levels applied to the mode pins (M0 - M2).

*Figure 11:* **Waveforms for Power-On and the Beginning of Configuration**

*Table 45:* **Power-On Timing and the Beginning of Configuration**

| Symbol | Description | Device | All Speed Grades | | Units |
|---|---|---|---|---|---|
| | | | Min | Max | |
| $T_{POR}$(2) | The time from the application of $V_{CCINT}$, $V_{CCAUX}$, and $V_{CCO}$ Bank 2 supply voltage ramps (whichever occurs last) to the rising transition of the INIT_B pin | All | – | 18 | ms |
| $T_{PROG}$ | The width of the low-going pulse on the PROG_B pin | All | 0.5 | - | µs |
| $T_{PL}$(2) | The time from the rising edge of the PROG_B pin to the rising transition on the INIT_B pin | XC3S50A | – | 0.5 | ms |
| | | XC3S200A | – | 0.5 | ms |
| | | XC3S400A | – | 1 | ms |
| | | XC3S700A | – | 2 | ms |
| | | XC3S1400A | – | 2 | ms |
| $T_{INIT}$ | Minimum Low pulse width on INIT_B output | All | 250 | – | ns |
| $T_{ICCK}$(3) | The time from the rising edge of the INIT_B pin to the generation of the configuration clock signal at the CCLK output pin | All | 0.5 | 4 | µs |

**Notes:**

1. The numbers in this table are based on the operating conditions set forth in Table 8. This means power must be applied to all $V_{CCINT}$, $V_{CCO}$, and $V_{CCAUX}$ lines.
2. Power-on reset and the clearing of configuration memory occurs during this period.
3. This specification applies only to the Master Serial, SPI, and BPI modes.
4. For details on configuration, see UG332 *Spartan-3 Generation Configuration User Guide*.

## Configuration Clock (CCLK) Characteristics

*Table 46:* **Master Mode CCLK Output Period by *ConfigRate* Opti0on Setting**

| Symbol | Description | *ConfigRate* Setting | Temperature Range | Minimum | Maximum | Units |
|---|---|---|---|---|---|---|
| $T_{CCLK1}$ | CCLK clock period by ***ConfigRate*** setting | 1 *(power-on value)* | Commercial | 1,254 | 2,500 | ns |
| | | | Industrial | 1,180 | | ns |
| $T_{CCLK3}$ | | 3 | Commercial | 413 | 833 | ns |
| | | | Industrial | 390 | | ns |
| $T_{CCLK6}$ | | 6 (default) | Commercial | 207 | 417 | ns |
| | | | Industrial | 195 | | ns |
| $T_{CCLK7}$ | | 7 | Commercial | 178 | 357 | ns |
| | | | Industrial | 168 | | ns |
| $T_{CCLK8}$ | | 8 | Commercial | 156 | 313 | ns |
| | | | Industrial | 147 | | ns |
| $T_{CCLK10}$ | | 10 | Commercial | 123 | 250 | ns |
| | | | Industrial | 116 | | ns |
| $T_{CCLK12}$ | | 12 | Commercial | 103 | 208 | ns |
| | | | Industrial | 97 | | ns |
| $T_{CCLK13}$ | | 13 | Commercial | 93 | 192 | ns |
| | | | Industrial | 88 | | ns |
| $T_{CCLK17}$ | | 17 | Commercial | 72 | 147 | ns |
| | | | Industrial | 68 | | ns |
| $T_{CCLK22}$ | | 22 | Commercial | 54 | 114 | ns |
| | | | Industrial | 51 | | ns |
| $T_{CCLK25}$ | | 25 | Commercial | 47 | 100 | ns |
| | | | Industrial | 45 | | ns |
| $T_{CCLK27}$ | | 27 | Commercial | 44 | 93 | ns |
| | | | Industrial | 42 | | ns |
| $T_{CCLK33}$ | | 33 | Commercial | 36 | 76 | ns |
| | | | Industrial | 34 | | ns |
| $T_{CCLK44}$ | | 44 | Commercial | 26 | 57 | ns |
| | | | Industrial | 25 | | ns |
| $T_{CCLK50}$ | | 50 | Commercial | 22 | 50 | ns |
| | | | Industrial | 21 | | ns |
| $T_{CCLK100}$ | | 100 | Commercial | 11.2 | 25 | ns |
| | | | Industrial | 10.6 | | ns |

**Notes:**

1. Set the ***ConfigRate*** option value when generating a configuration bitstream.

*Table 47:* **Master Mode CCLK Output Frequency by *ConfigRate* Option Setting**

| Symbol | Description | *ConfigRate* Setting | Temperature Range | Minimum | Maximum | Units |
|---|---|---|---|---|---|---|
| $F_{CCLK1}$ | Equivalent CCLK clock frequency by ***ConfigRate*** setting | 1 *(power-on value)* | Commercial | 0.400 | 0.797 | MHz |
| | | | Industrial | | 0.847 | MHz |
| $F_{CCLK3}$ | | 3 | Commercial | 1.20 | 2.42 | MHz |
| | | | Industrial | | 2.57 | MHz |
| $F_{CCLK6}$ | | 6 (default) | Commercial | 2.40 | 4.83 | MHz |
| | | | Industrial | | 5.13 | MHz |
| $F_{CCLK7}$ | | 7 | Commercial | 2.80 | 5.61 | MHz |
| | | | Industrial | | 5.96 | MHz |
| $F_{CCLK8}$ | | 8 | Commercial | 3.20 | 6.41 | MHz |
| | | | Industrial | | 6.81 | MHz |
| $F_{CCLK10}$ | | 10 | Commercial | 4.00 | 8.12 | MHz |
| | | | Industrial | | 8.63 | MHz |
| $F_{CCLK12}$ | | 12 | Commercial | 4.80 | 9.70 | MHz |
| | | | Industrial | | 10.31 | MHz |
| $F_{CCLK13}$ | | 13 | Commercial | 5.20 | 10.69 | MHz |
| | | | Industrial | | 11.37 | MHz |
| $F_{CCLK17}$ | | 17 | Commercial | 6.80 | 13.74 | MHz |
| | | | Industrial | | 14.61 | MHz |
| $F_{CCLK22}$ | | 22 | Commercial | 8.80 | 18.44 | MHz |
| | | | Industrial | | 19.61 | MHz |
| $F_{CCLK25}$ | | 25 | Commercial | 10.00 | 20.90 | MHz |
| | | | Industrial | | 22.23 | MHz |
| $F_{CCLK27}$ | | 27 | Commercial | 10.80 | 22.39 | MHz |
| | | | Industrial | | 23.81 | MHz |
| $F_{CCLK33}$ | | 33 | Commercial | 13.20 | 27.48 | MHz |
| | | | Industrial | | 29.23 | MHz |
| $F_{CCLK44}$ | | 44 | Commercial | 17.60 | 37.60 | MHz |
| | | | Industrial | | 40.00 | MHz |
| $F_{CCLK50}$ | | 50 | Commercial | 20.00 | 44.80 | MHz |
| | | | Industrial | | 47.66 | MHz |
| $F_{CCLK100}$ | | 100 | Commercial | 40.00 | 88.68 | MHz |
| | | | Industrial | | 94.34 | MHz |

*Table 48:* **Master Mode CCLK Output Minimum Low and High Time**

| Symbol | Description | | *ConfigRate* Setting | | | | | | | | | | | | | | | | Units |
|---|---|---|---|---|---|---|---|---|---|---|---|---|---|---|---|---|---|---|---|
| | | | 1 | 3 | 6 | 7 | 8 | 10 | 12 | 13 | 17 | 22 | 25 | 27 | 33 | 44 | 50 | 100 | |
| $T_{MCCL}$, $T_{MCCH}$ | Master Mode CCLK Minimum Low and High Time | Commercial | 595 | 196 | 98.3 | 84.5 | 74.1 | 58.4 | 48.9 | 44.1 | 34.2 | 25.6 | 22.3 | 20.9 | 17.1 | 12.3 | 10.4 | 5.3 | ns |
| | | Industrial | 560 | 185 | 92.6 | 79.8 | 69.8 | 55.0 | 46.0 | 41.8 | 32.3 | 24.2 | 21.4 | 20.0 | 16.2 | 11.9 | 10.0 | 5.0 | ns |

*Table 49:* **Slave Mode CCLK Input Low and High Time**

| Symbol | Description | Min | Max | Units |
|---|---|---|---|---|
| $T_{SCCL}$, $T_{SCCH}$ | CCLK Low and High time | 5 | ∞ | ns |

## Master Serial and Slave Serial Mode Timing

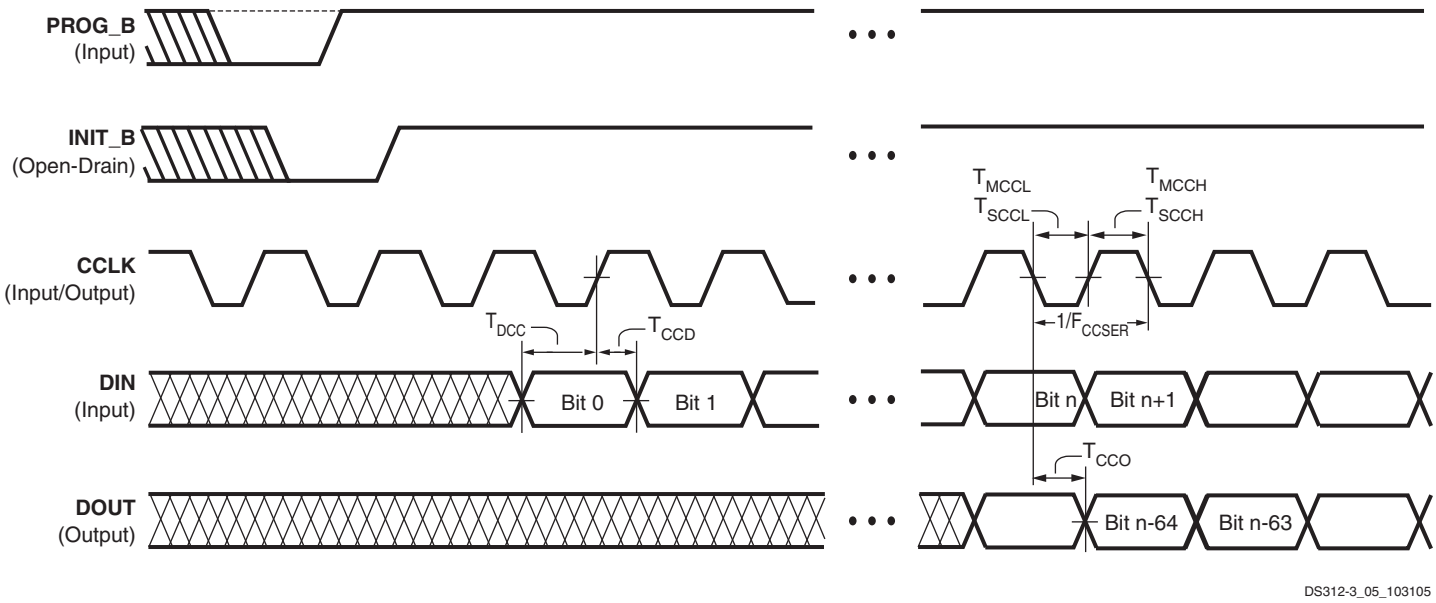


*Figure 12:* **Waveforms for Master Serial and Slave Serial Configuration**

*Table 50:* **Timing for the Master Serial and Slave Serial Configuration Modes**

| Symbol | Description | | Slave/ Master | All Speed Grades Min | All Speed Grades Max | Units |
|---|---|---|---|---|---|---|
| **Clock-to-Output Times** | | | | | | |
| $T_{CCO}$ | The time from the falling transition on the CCLK pin to data appearing at the DOUT pin | | Both | 1.5 | 10 | ns |
| **Setup Times** | | | | | | |
| $T_{DCC}$ | The time from the setup of data at the DIN pin to the rising transition at the CCLK pin | | Both | 7 | – | ns |
| **Hold Times** | | | | | | |
| $T_{CCD}$ | The time from the rising transition at the CCLK pin to the point when data is last held at the DIN pin | | Master | 0 | – | ns |
| | | | Slave | 1.0 | | |
| **Clock Timing** | | | | | | |
| $T_{CCH}$ | High pulse width at the CCLK input pin | | Master | See Table 48 | | |
| | | | Slave | See Table 49 | | |
| $T_{CCL}$ | Low pulse width at the CCLK input pin | | Master | See Table 48 | | |
| | | | Slave | See Table 49 | | |
| $F_{CCSER}$ | Frequency of the clock signal at the CCLK input pin | No bitstream compression | Slave | 0 | 100 | MHz |
| | | With bitstream compression | | 0 | 100 | MHz |

**Notes:**

1. The numbers in this table are based on the operating conditions set forth in Table 8.
2. For serial configuration with a daisy-chain of multiple FPGAs, the maximum limit is 25 MHz.

## Slave Parallel Mode Timing

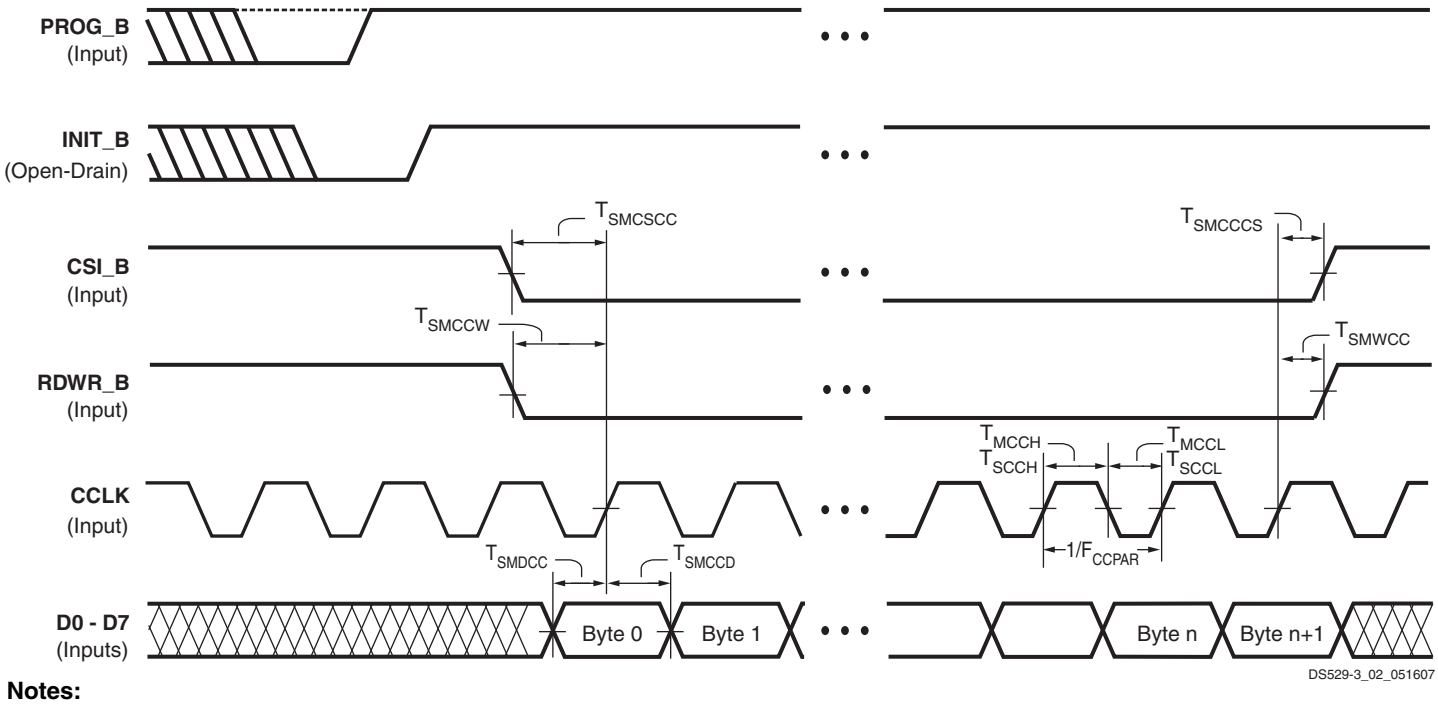


**Notes:**

1. It is possible to abort configuration by pulling CSI_B Low in a given CCLK cycle, then switching RDWR_B Low or High in any subsequent cycle for which CSI_B remains Low. The RDWR_B pin asynchronously controls the driver impedance of the D0 - D7 bus. When RDWR_B switches High, be careful to avoid contention on the D0 - D7 bus.
2. To pause configuration, pause CCLK instead of de-asserting CSI_B. See UG332 Chapter 7 section “Non-Continuous SelectMAP Data Loading” for more details.

*Figure 13:* **Waveforms for Slave Parallel Configuration**

*Table 51:* **Timing for the Slave Parallel Configuration Mode**

| Symbol | Description | | All Speed Grades | | Units |
|---|---|---|---|---|---|
| | | | Min | Max | |
| **Setup Times** | | | | | |
| $T_{SMDCC}$(2) | The time from the setup of data at the D0-D7 pins to the rising transition at the CCLK pin | | 7 | – | ns |
| $T_{SMCSCC}$ | Setup time on the CSI_B pin before the rising transition at the CCLK pin | | 7 | – | ns |
| $T_{SMCCW}$ | Setup time on the RDWR_B pin before the rising transition at the CCLK pin | | 15 | – | ns |
| **Hold Times** | | | | | |
| $T_{SMCCD}$ | The time from the rising transition at the CCLK pin to the point when data is last held at the D0-D7 pins | | 1.0 | – | ns |
| $T_{SMCCCS}$ | The time from the rising transition at the CCLK pin to the point when a logic level is last held at the CSO_B pin | | 0 | – | ns |
| $T_{SMWCC}$ | The time from the rising transition at the CCLK pin to the point when a logic level is last held at the RDWR_B pin | | 0 | – | ns |
| **Clock Timing** | | | | | |
| $T_{CCH}$ | The High pulse width at the CCLK input pin | | 5 | – | ns |
| $T_{CCL}$ | The Low pulse width at the CCLK input pin | | 5 | – | ns |
| $F_{CCPAR}$ | Frequency of the clock signal at the CCLK input pin | No bitstream compression | 0 | 80 | MHz |
| | | With bitstream compression | 0 | 80 | MHz |

**Notes:**

1. The numbers in this table are based on the operating conditions set forth in Table 8.
2. Some Xilinx documents refer to Parallel modes as “SelectMAP” modes.

## Serial Peripheral Interface (SPI) Configuration Timing

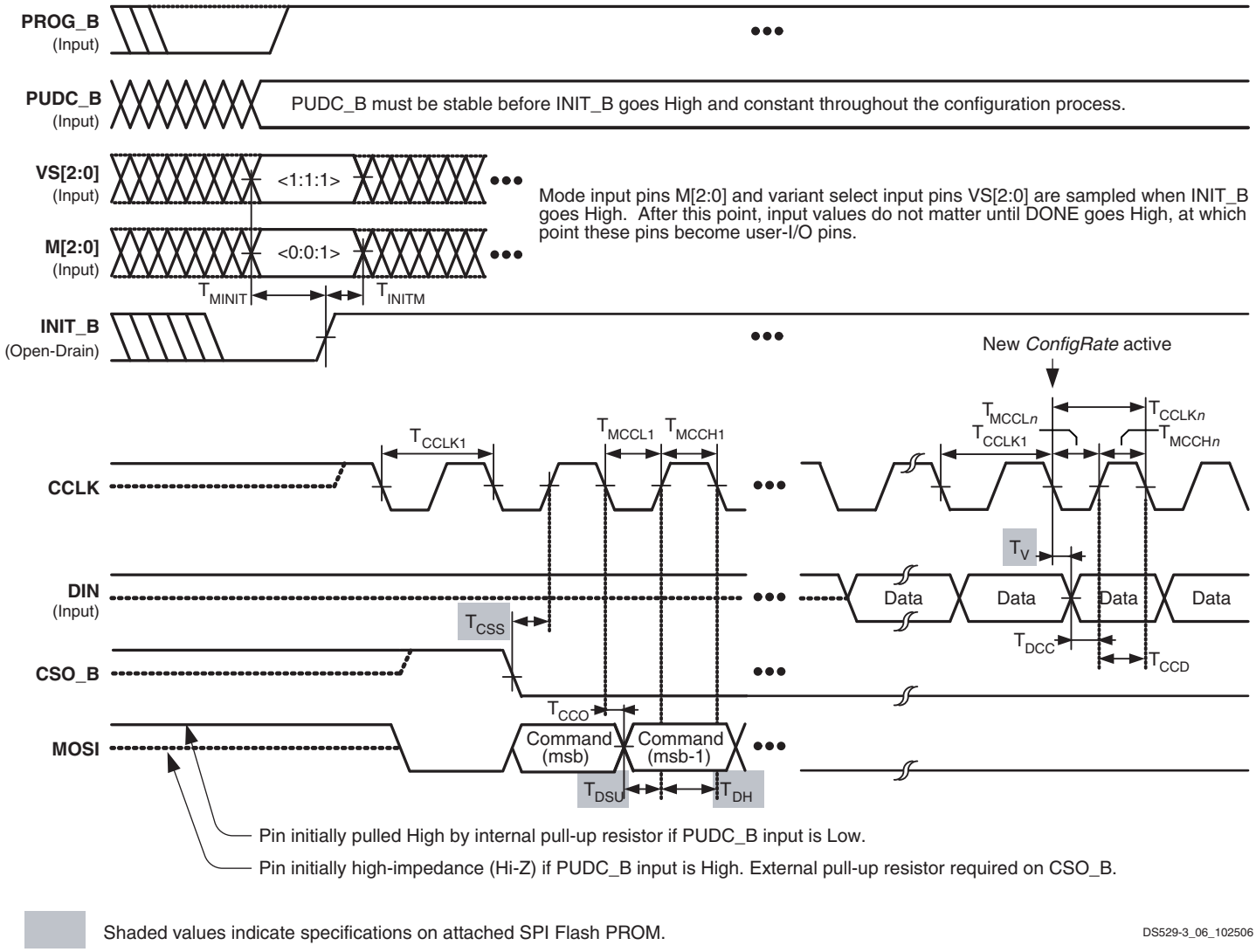


*Figure 14:* **Waveforms for Serial Peripheral Interface (SPI) Configuration**

*Table 52:* **Timing for Serial Peripheral Interface (SPI) Configuration Mode**

| Symbol | Description | Minimum | Maximum | Units |
|---|---|---|---|---|
| $T_{CCLK1}$ | Initial CCLK clock period | See Table 46 | | |
| $T_{CCLKn}$ | CCLK clock period after FPGA loads ***ConfigRate*** bitstream option setting | See Table 46 | | |
| $T_{MINIT}$ | Setup time on VS[2:0] variant-select pins and M[2:0] mode pins before the rising edge of INIT_B | 50 | – | ns |
| $T_{INITM}$ | Hold time on VS[2:0] variant-select pins and M[2:0] mode pins after the rising edge of INIT_B | 0 | – | ns |
| $T_{CCO}$ | MOSI output valid delay after CCLK falling clock edge | See Table 50 | | |
| $T_{DCC}$ | Setup time on the DIN data input before CCLK rising clock edge | See Table 50 | | |
| $T_{CCD}$ | Hold time on the DIN data input after CCLK rising clock edge | See Table 50 | | |

*Table 53:* **Configuration Timing Requirements for Attached SPI Serial Flash**

| Symbol | Description | Requirement | Units |
|---|---|---|---|
| $T_{CCS}$ | SPI serial Flash PROM chip-select time | $T_{CCS} \leq T_{MCCL1} - T_{CCO}$ | ns |
| $T_{DSU}$ | SPI serial Flash PROM data input setup time | $T_{DSU} \leq T_{MCCL1} - T_{CCO}$ | ns |
| $T_{DH}$ | SPI serial Flash PROM data input hold time | $T_{DH} \leq T_{MCCH1}$ | ns |
| $T_V$ | SPI serial Flash PROM data clock-to-output time | $T_V \leq T_{MCCLn} - T_{DCC}$ | ns |
| $f_C$ or $f_R$ | Maximum SPI serial Flash PROM clock frequency (also depends on specific read command used) | $f_C \geq \frac{1}{T_{CCLKn(min)}}$ | MHz |

**Notes:**

1. These requirements are for successful FPGA configuration in SPI mode, where the FPGA generates the CCLK signal. The post-configuration timing can be different to support the specific needs of the application loaded into the FPGA.
2. Subtract additional printed circuit board routing delay as required by the application.

## Byte Peripheral Interface (BPI) Configuration Timing

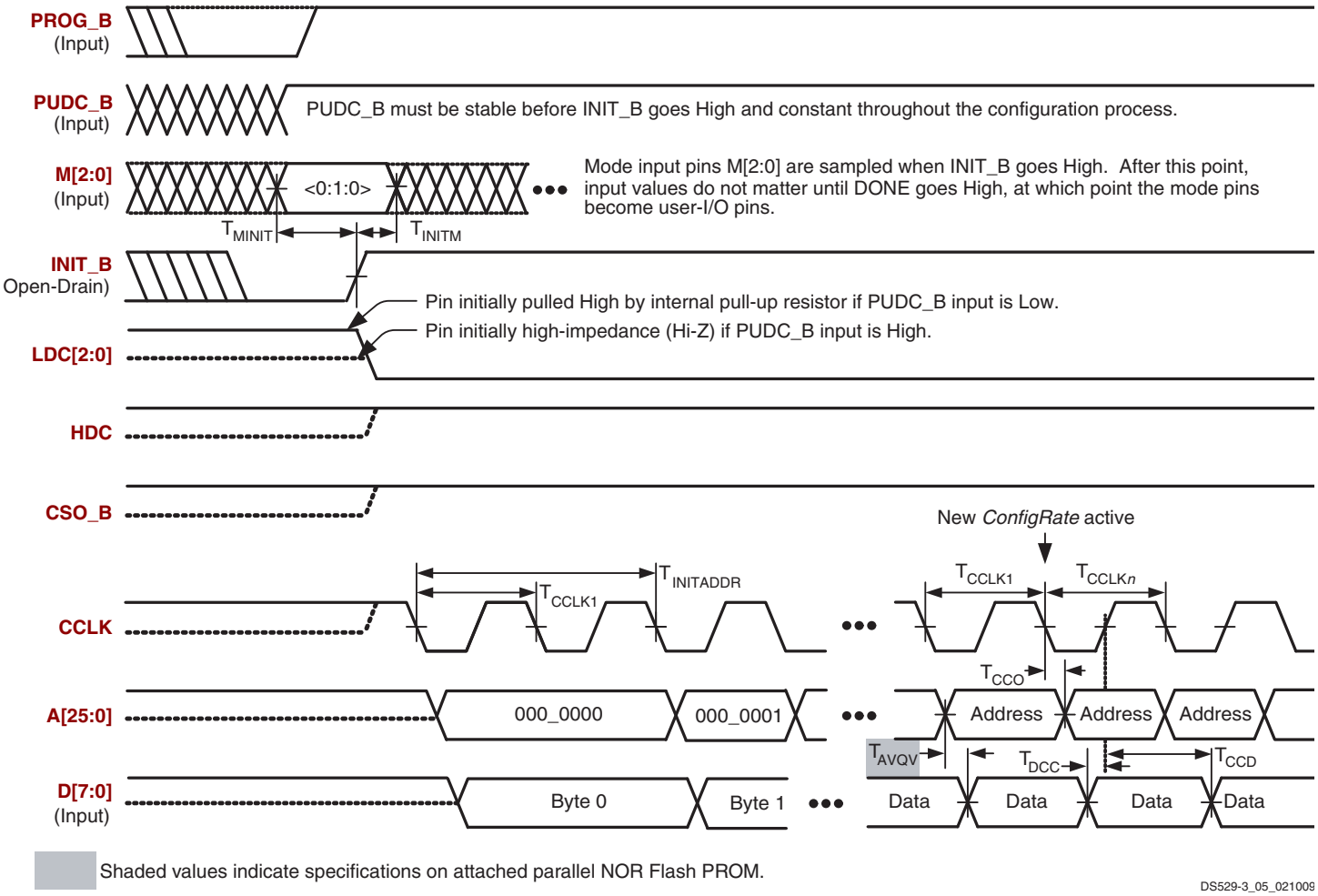


*Figure 15:* **Waveforms for Byte-wide Peripheral Interface (BPI) Configuration**

*Table 54:* **Timing for Byte-wide Peripheral Interface (BPI) Configuration Mode**

| Symbol | Description | Minimum | Maximum | Units |
|---|---|---|---|---|
| $T_{CCLK1}$ | Initial CCLK clock period | See Table 46 | | |
| $T_{CCLKn}$ | CCLK clock period after FPGA loads ConfigRate setting | See Table 46 | | |
| $T_{MINIT}$ | Setup time on M[2:0] mode pins before the rising edge of INIT_B | 50 | – | ns |
| $T_{INITM}$ | Hold time on M[2:0] mode pins after the rising edge of INIT_B | 0 | – | ns |
| $T_{INITADDR}$ | Minimum period of initial A[25:0] address cycle; LDC[2:0] and HDC are asserted and valid | 5 | 5 | $T_{CCLK1}$ cycles |
| $T_{CCO}$ | Address A[25:0] outputs valid after CCLK falling edge | See Table 50 | | |
| $T_{DCC}$ | Setup time on D[7:0] data inputs before CCLK rising edge | See $T_{SMDCC}$ in Table 51 | | |
| $T_{CCD}$ | Hold time on D[7:0] data inputs after CCLK rising edge | 0 | – | ns |

*Table 55:* **Configuration Timing Requirements for Attached Parallel NOR BPI Flash**

| Symbol | Description | Requirement | Units |
|---|---|---|---|
| $T_{CE}$ ($t_{ELQV}$) | Parallel NOR Flash PROM chip-select time | $T_{CE} \leq T_{INITADDR}$ | ns |
| $T_{OE}$ ($t_{GLQV}$) | Parallel NOR Flash PROM output-enable time | $T_{OE} \leq T_{INITADDR}$ | ns |
| $T_{ACC}$ ($t_{AVQV}$) | Parallel NOR Flash PROM read access time | $T_{ACC} \leq 50\% T_{CCLKn(min)} - T_{CCO} - T_{DCC} - PCB$ | ns |
| $T_{BYTE}$ ($t_{FLQV}$, $t_{FHQV}$) | For x8/x16 PROMs only: BYTE# to output valid time(3) | $T_{BYTE} \leq T_{INITADDR}$ | ns |

**Notes:**

1. These requirements are for successful FPGA configuration in BPI mode, where the FPGA generates the CCLK signal. The post-configuration timing can be different to support the specific needs of the application loaded into the FPGA.
2. Subtract additional printed circuit board routing delay as required by the application.
3. The initial BYTE# timing can be extended using an external, appropriately sized pull-down resistor on the FPGA's LDC2 pin. The resistor value also depends on whether the FPGA's PUDC_B pin is High or Low.

## IEEE 1149.1/1532 JTAG Test Access Port Timing

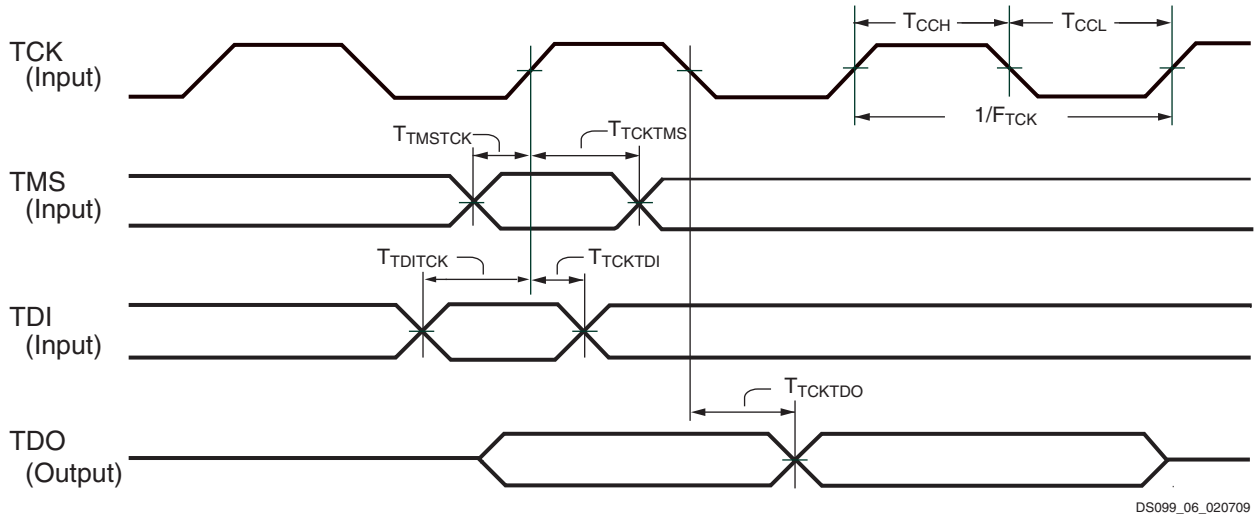


*Figure 16:* **JTAG Waveforms**

*Table 56:* **Timing for the JTAG Test Access Port**

| Symbol | Description | | All Speed Grades Min | All Speed Grades Max | Units |
|---|---|---|---|---|---|
| **Clock-to-Output Times** | | | | | |
| $T_{TCKTDO}$ | The time from the falling transition on the TCK pin to data appearing at the TDO pin | | 1.0 | 11.0 | ns |
| **Setup Times** | | | | | |
| $T_{TDITCK}$ | The time from the setup of data at the TDI pin to the rising transition at the TCK pin | All devices and functions except those shown below | 7.0 | – | ns |
| | | Boundary scan commands (INTEST, EXTEST, SAMPLE) on XC3S700A and XC3S1400A FPGAs | 11.0 | | |
| $T_{TMSTCK}$ | The time from the setup of a logic level at the TMS pin to the rising transition at the TCK pin | | 7.0 | – | ns |
| **Hold Times** | | | | | |
| $T_{TCKTDI}$ | The time from the rising transition at the TCK pin to the point when data is last held at the TDI pin | All functions except those shown below | 0 | – | ns |
| | | Configuration commands (CFG_IN, ISC_PROGRAM) | 2.0 | | |
| $T_{TCKTMS}$ | The time from the rising transition at the TCK pin to the point when a logic level is last held at the TMS pin | | 0 | – | ns |
| **Clock Timing** | | | | | |
| $T_{CCH}$ | The High pulse width at the TCK pin | All functions except ISC_DNA command | 5 | – | ns |
| $T_{CCL}$ | The Low pulse width at the TCK pin | | 5 | – | ns |
| $T_{CCHDNA}$ | The High pulse width at the TCK pin | During ISC_DNA command | 10 | 10,000 | ns |
| $T_{CCLDNA}$ | The Low pulse width at the TCK pin | | 10 | 10,000 | ns |
| $F_{TCK}$ | Frequency of the TCK signal | All operations on XC3S50A, XC3S200A, and XC3S400A FPGAs and for BYPASS or HIGHZ instructions on all FPGAs | 0 | 33 | MHz |
| | | All operations on XC3S700A and XC3S1400A FPGAs, except for BYPASS or HIGHZ instructions | | 20 | |

**Notes:**

1. The numbers in this table are based on the operating conditions set forth in Table 8.
2. For details on JTAG see Chapter 9 “JTAG Configuration Mode and Boundary-Scan” in UG332 *Spartan-3 Generation Configuration User Guide*.

## Revision History

The following table shows the revision history for this document.

| Date | Version | Revision |
|---|---|---|
| 12/05/06 | 1.0 | Initial release. |
| 02/02/07 | 1.1 | Promoted to Preliminary status. Moved Table 15 to under "DC Electrical Characteristics" section. Updated all timing specifications for the v1.32 speed files. Added recommended Simultaneous Switching Output (SSO) limits in Table 29. Set a 10 µs maximum pulse width for the DNA_PORT READ signal and the JTAG clock input during the ISC_DNA command, affecting both Table 43 and Table 56. Described "External Termination Requirements for Differential I/O." Added separate DIN hold time for Slave mode in Table 50. Corrected wording in Table 52 and Table 54; no specifications affected. |
| 03/16/07 | 1.2 | Updated all AC timing specifications to the v1.34 speeds file. Promoted the XC3S700A and XC3S1400A FPGAs offered in the -4 speed grade to Production status, as shown in Table 16. Added Note 2 to Table 39 regarding the extra logic (one LUT) automatically added by ISE 9.1i and later software revisions for any DCM application that leverages the Digital Frequency Synthesizer (DFS). Separated some JTAG specifications by array size or function, as shown in Table 56. Updated quiescent current limits in Table 10. |
| 04/23/07 | 1.3 | Updated all AC timing specifications to the v1.35 speeds file. Promoted all devices except the XC3S400A to Production status, as shown in Table 16. |
| 05/08/07 | 1.4 | Updated XC3S400A to Production and v1.36 speeds file. Added banking rules and other explanatory footnotes to Table 12 and Table 13. Corrected DIFF_SSTL3_II $V_{OL}$ Max in Table 14. Improved XC3S400A Pin-to-Pin Clock-to-Output times in Table 18. Updated XC3S400A Pin-to-Pin Setup Times in Table 19. Updated TIOICKPD for -5 in Table 20. Added SSO numbers to Table 28 and Table 29. Removed invalid Embedded Multiplier Hold Times in Table 34. Improved CLKOUT_FREQ_CLK90 in Table 37. Improved $T_{TDITCK}$ and $F_{TCK}$ performance for XC3S400A in Table 56. |
| 07/10/07 | 1.5 | Added DIFF_HSTL_I and DIFF_HSTL_III to Table 13, Table 14, Table 27, and Table 29. Updated TMDS DC characteristics in Table 14. Updated for speed file v1.37 in ISE 9.2.01i as shown in Table 17. Updated pin-to-pin setup and hold times in Table 19. Updated TMDS output adjustment in Table 26. Updated I/O Test Method values in Table 27. Added BLVDS SSO numbers inTable 29. For Multiplier block, updated setup times and added hold times to Table 34. Updated block RAM clock width in Table 35. Updated CLKOUT_PER_JITT_2X and CLKOUT_PER_JITT_DV2 in Table 37. Added CCLK specifications for Commercial in Table 46 through Table 48. |
| 04/15/08 | 1.6 | Added $V_{IN}$ to Recommended Operating Conditions in Table 8 and added reference to XAPP459, "Eliminating I/O Coupling Effects when Interfacing Large-Swing Single-Ended Signals to User I/O Pins." Reduced typical $I_{CCINTQ}$ and $I_{CCAUXQ}$ quiescent current values by 12%-58% in Table 10. Increased $V_{IL}$ max to 0.4V for LVCMOS12/15/18 and improved $V_{IH}$ min to 0.7V for LVCMOS12 in Table 11. Changed $V_{OL}$ max to 0.4V and $V_{OH}$ min to $V_{CCO}$-0.4V for LVCMOS15/18 in Table 12. Noted latest speed file v1.39 in ISE 10.1 software in Table 16. Added new packages to SSO limits in Table 28 and Table 29. Improved SSTL18_II SSO limit for FG packages in Table 29. Improved $F_{BUFG}$ for -4 to 334 MHz in Table 33. Added references to 375 MHz performance via SCD 4103 in Table 33,Table 38, Table 39, and Table 40. Restored Units column to Table 44. Updated CCLK output maximum period in Table 46 to match minimum frequency in Table 47. Corrected BPI active clock edge in Figure 15 and Table 54. |
| 05/28/08 | 1.7 | Improved $V_{CCAUXT}$ and $V_{CCO2T}$ POR minimum in Table 5 and updated $V_{CCO}$ POR levels in Figure 11. Clarified recommended $V_{IN}$ in Table 8. Added reference to $V_{CCAUX}$ in "Simultaneously Switching Output Guidelines". Added reference to Sample Window in Table 21. Removed DNA_RETENTION limit of 10 years in Table 15 since number of Read cycles is the only unique limit. Added references to UG332. |
| 03/06/09 | 1.8 | Changed typical quiescent current temperature from ambient to junction. Updated BPI configuration waveforms in Figure 15 and updated Table 55. Updated selected I/O standard DC characteristics. Added TIOPI and TIOPID in Table 22.<br>Removed references to SCD 4103. |
| 08/19/10 | 2.0 | Added $I_{IK}$ to Table 4. Updated $V_{IN}$ in Table 8 and footnoted $I_L$ in Table 9 to note potential leakage between pins of a differential pair. Clarified LVPECL notes to Table 13. Corrected symbols for TSUSPEND_GTS and TSUSPEND_GWE in Table 44. |
| 12/18/18 | 2.1 | Updated for *Lead-Frame Plating Composition Change For Legacy Eutectic Products* (XCN18024). |

## Introduction

This section describes how the various pins on a Spartan®-3A FPGA connect within the supported component packages, and provides device-specific thermal characteristics. For general information on the pin functions and the package characteristics, see the Packaging section of UG331: *Spartan-3 Generation FPGA User Guide*.

- **UG331: Spartan-3 Generation FPGA User Guide** www.xilinx.com/support/documentation /user_guides/ug331.pdf

Spartan-3A FPGAs are available in both standard and Pb-free, RoHS versions of each package, with the Pb-free version adding a "G" to the middle of the package code. Except for the thermal characteristics, all information for the standard package applies equally to the Pb-free package.

## Pin Types

Most pins on a Spartan-3A FPGA are general-purpose, user-defined I/O pins. There are, however, up to 12 different functional types of pins on Spartan-3A FPGA packages, as outlined in Table 57. In the package footprint drawings that follow, the individual pins are color-coded according to pin type as in the table.

*Table 57:* **Types of Pins on Spartan-3A FPGAs**

| Type / Color Code | Description | Pin Name(s) in Type |
|---|---|---|
| I/O | Unrestricted, general-purpose user-I/O pin. Most pins can be paired together to form differential I/Os. | IO_#<br>IO_Lxxy_# |
| INPUT | Unrestricted, general-purpose input-only pin. This pin does not have an output structure, differential termination resistor, or PCI clamp diode. | IP_#<br>IP_Lxxy_# |
| DUAL | Dual-purpose pin used in some configuration modes during the configuration process and then usually available as a user I/O after configuration. If the pin is not used during configuration, this pin behaves as an I/O-type pin. See UG332: *Spartan-3 Generation Configuration User Guide* for additional information on these signals. | M[2:0]<br>PUDC_B<br>CCLK<br>MOSI/CSI_B<br>D[7:1]<br>D0/DIN<br>DOUT<br>CSO_B<br>RDWR_B<br>INIT_B<br>A[25:0]<br>VS[2:0]<br>LDC[2:0]<br>HDC |
| VREF | Dual-purpose pin that is either a user-I/O pin or Input-only pin, or, along with all other VREF pins in the same bank, provides a reference voltage input for certain I/O standards. If used for a reference voltage within a bank, all VREF pins within the bank must be connected. | IP/VREF_#<br>IP_Lxxy_#/VREF_#<br>IO/VREF_#<br>IO_Lxxy_#/VREF_# |
| CLK | Either a user-I/O pin or an input to a specific clock buffer driver. Most packages have 16 global clock inputs that optionally clock the entire device. The exceptions are the TQ144 and the XC3S50A in the FT256 package). The RHCLK inputs optionally clock the right half of the device. The LHCLK inputs optionally clock the left half of the device. See the Using Global Clock Resources chapter in UG331: *Spartan-3 Generation FPGA User Guide* for additional information on these signals. | IO_Lxxy_#/GCLK[15:0],<br>IO_Lxxy_#/LHCLK[7:0],<br>IO_Lxxy_#/RHCLK[7:0] |
| CONFIG | Dedicated configuration pin, two per device. Not available as a user-I/O pin. Every package has two dedicated configuration pins. These pins are powered by VCCAUX. See the UG332: *Spartan-3 Generation Configuration User Guide* for additional information on the DONE and PROG_B signals. | DONE, PROG_B |

© Copyright 2006–2018 Xilinx, Inc. XILINX, the Xilinx logo, Virtex, Spartan, ISE, and other designated brands included herein are trademarks of Xilinx in the United States and other countries. PCI is a registered trademark of the PCI-SIG. All other trademarks are the property of their respective owners.

*Table 57:* **Types of Pins on Spartan-3A FPGAs*(Continued)***

| Type / Color Code | Description | Pin Name(s) in Type |
|---|---|---|
| PWR MGMT | Control and status pins for the power-saving Suspend mode. SUSPEND is a dedicated pin and is powered by $V_{CCAUX}$. AWAKE is a dual-purpose pin. Unless Suspend mode is enabled in the application, AWAKE is available as a user-I/O pin. | SUSPEND, AWAKE |
| JTAG | Dedicated JTAG pin - 4 per device. Not available as a user-I/O pin. Every package has four dedicated JTAG pins. These pins are powered by VCCAUX. | TDI, TMS, TCK, TDO |
| GND | Dedicated ground pin. The number of GND pins depends on the package used. All must be connected. | GND |
| VCCAUX | Dedicated auxiliary power supply pin. The number of VCCAUX pins depends on the package used. All must be connected. $V_{CCAUX}$ can be either 2.5V or 3.3V. Set on board and using CONFIG VCCAUX constraint. | VCCAUX |
| VCCINT | Dedicated internal core logic power supply pin. The number of VCCINT pins depends on the package used. All must be connected to +1.2V. | VCCINT |
| VCCO | Along with all the other VCCO pins in the same bank, this pin supplies power to the output buffers within the I/O bank and sets the input threshold voltage for some I/O standards. All must be connected. | VCCO_# |
| N.C. | This package pin is not connected in this specific device/package combination but may be connected in larger devices in the same package. | N.C. |

**Notes:**

1. # = I/O bank number, an integer between 0 and 3.

## Package Pins by Type

Each package has three separate voltage supply inputs—VCCINT, VCCAUX, and VCCO—and a common ground return, GND. The numbers of pins dedicated to these functions vary by package, as shown in Table 58.

*Table 58:* **Power and Ground Supply Pins by Package**

| Package | VCCINT | VCCAUX | VCCO | GND |
|---|---|---|---|---|
| VQ100 | 4 | 3 | 6 | 13 |
| TQ144 | 4 | 4 | 8 | 13 |
| FT256 (50A/200A/400A) | 6 | 4 | 16 | 28 |
| FT256 (700A/1400A) | 15 | 10 | 13 | 50 |
| FG320 | 6 | 8 | 16 | 32 |
| FG400 | 9 | 8 | 22 | 43 |
| FG484 | 15 | 10 | 24 | 53 |
| FG676 | 23 | 14 | 36 | 77 |

A majority of package pins are user-defined I/O or input pins. However, the numbers and characteristics of these I/O depend on the device type and the package in which it is available, as shown in Table 59. The table shows the maximum number of single-ended I/O pins available, assuming that all I/O-, INPUT-, DUAL-, VREF-, and CLK-type pins are used as general-purpose I/O. AWAKE is counted here as a dual-purpose I/O pin. Likewise, the table shows the maximum number of differential pin-pairs available on the package. Finally, the table shows how the total maximum user-I/Os are distributed by pin type, including the number of unconnected—N.C.—pins on the device.

Not all I/O standards are supported on all I/O banks. The left and right banks (I/O banks 1 and 3) support higher output drive current than the top and bottom banks (I/O banks 0 and 2). Similarly, true differential output standards, such as LVDS, RSDS, PPDS, miniLVDS, and TMDS, are only supported in the top or bottom banks (I/O banks 0 and 2). Inputs are unrestricted. For more details, see the chapter "*Using I/O Resources*" in UG331.

*Table 59:* **Maximum User I/O by Package**

| Device | Package | Maximum User I/Os and Input-Only | Maximum Input-Only | Maximum Differential Pairs | All Possible I/Os by Type | | | | | |
|---|---|---|---|---|---|---|---|---|---|---|
| | | | | | I/O | INPUT | DUAL | VREF | CLK | N.C. |
| XC3S50A | VQ100 | 68 | 6 | 60 | 17 | 2 | 20 | 6 | 23 | 0 |
| XC3S200A | | 68 | 6 | 60 | 17 | 2 | 20 | 6 | 23 | 0 |
| XC3S50A | TQ144 | 108 | 7 | 50 | 42 | 2 | 26 | 8 | 30 | 0 |
| XC3S50A | FT256 | 144 | 32 | 64 | 53 | 20 | 26 | 15 | 30 | 51 |
| XC3S200A | | 195 | 35 | 90 | 69 | 21 | 52 | 21 | 32 | 0 |
| XC3S400A | | 195 | 35 | 90 | 69 | 21 | 52 | 21 | 32 | 0 |
| XC3S700A | | 161 | 13 | 60 | 59 | 2 | 52 | 18 | 30 | 0 |
| XC3S1400A | | 161 | 13 | 60 | 59 | 2 | 52 | 18 | 30 | 0 |
| XC3S200A | FG320 | 248 | 56 | 112 | 101 | 40 | 52 | 23 | 32 | 3 |
| XC3S400A | | 251 | 59 | 112 | 101 | 42 | 52 | 24 | 32 | 0 |
| XC3S400A | FG400 | 311 | 63 | 142 | 155 | 46 | 52 | 26 | 32 | 0 |
| XC3S700A | | 311 | 63 | 142 | 155 | 46 | 52 | 26 | 32 | 0 |
| XC3S700A | FG484 | 372 | 84 | 165 | 194 | 61 | 52 | 33 | 32 | 3 |
| XC3S1400A | | 375 | 87 | 165 | 195 | 62 | 52 | 34 | 32 | 0 |
| XC3S1400A | FG676 | 502 | 94 | 227 | 313 | 67 | 52 | 38 | 32 | 17 |

**Notes:**

1. Some VREFs are on INPUT pins. See pinout tables for details.

Electronic versions of the package pinout tables and footprints are available for download from the Xilinx website. Using a spreadsheet program, the data can be sorted and reformatted according to any specific needs. Similarly, the ASCII-text file is easily parsed by most scripting programs.

http://www.xilinx.com/support/documentation/data_sheets/s3a_pin.zip

## Package Overview

Table 60 shows the six low-cost, space-saving production package styles for the Spartan-3A family.

*Table 60:* **Spartan-3A Family Package Options[(1)]**

| Package | Leads | Type | Maximum I/O | Lead Pitch (mm) | Body Area (mm) | Height (mm) |
|---|---|---|---|---|---|---|
| VQ100 / VQG100 | 100 | Very Thin Quad Flat Pack (VQFP) | 68 | 0.5 | 14 x 14 | 1.20 |
| TQ144 / TQG144 | 144 | Thin Quad Flat Pack (TQFP) | 108 | 0.5 | 20 x 20 | 1.60 |
| FT256 / FTG256 | 256 | Fine-pitch Thin Ball Grid Array (FBGA) | 195 | 1.0 | 17 x 17 | 1.55 |
| FG320 / FGG320 | 320 | Fine-pitch Ball Grid Array (FBGA) | 251 | 1.0 | 19 x 19 | 2.00 |
| FG400 / FGG400 | 400 | Fine-pitch Ball Grid Array (FBGA) | 311 | 1.0 | 21 x 21 | 2.43 |
| FG484 / FGG484 | 484 | Fine-pitch Ball Grid Array (FBGA) | 375 | 1.0 | 23 x 23 | 2.60 |
| FG676 / FGG676 | 676 | Fine-pitch Ball Grid Array (FBGA) | 502 | 1.0 | 27 x 27 | 2.60 |

**Notes:**

1. See the package material declaration data sheet for package mass.

Each package style is available in an environmentally friendly lead-free (Pb-free) option. The Pb-free packages include an extra ‘G’ in the package style name. For example, the standard “CS484” package becomes “CSG484” when ordered as the Pb-free option. The mechanical dimensions of the standard and Pb-free packages are similar. Package drawings and package material declaration data sheets (MDDS) are available on www.xilinx.com.

For additional package information, see UG112: *Device Package User Guide*.

## Mechanical Drawings

Material Declaration Data Sheets (MDDS) are also available on the www.xilinx.com for each package.

## Package Thermal Characteristics

The power dissipated by an FPGA application has implications on package selection and system design. The power consumed by a Spartan-3A FPGA is reported using either the XPower Power Estimator or the XPower Analyzer calculator integrated in the Xilinx® ISE® development software. Table 61 provides the thermal characteristics for the various Spartan-3A FPGA package offerings. This information is also available using the Thermal Query tool on xilinx.com (www.xilinx.com/cgi-bin/thermal/thermal.pl).

The junction-to-case thermal resistance ($\theta_{JC}$) indicates the difference between the temperature measured on the package body (case) and the die junction temperature per watt of power consumption. The junction-to-board ($\theta_{JB}$) value similarly reports the difference between the board and junction temperature. The junction-to-ambient ($\theta_{JA}$) value reports the temperature difference between the ambient environment and the junction temperature. The $\theta_{JA}$ value is reported at different air velocities, measured in linear feet per minute (LFM). The “Still Air (0 LFM)” column shows the $\theta_{JA}$ value in a system without a fan. The thermal resistance drops with increasing air flow.

*Table 61:* **Spartan-3A Package Thermal Characteristics**

| Package | Device | Junction-to-Case ($\theta_{JC}$) | Junction-to-Board ($\theta_{JB}$) | Junction-to-Ambient ($\theta_{JA}$) at Different Air Flows | | | | Units |
|---|---|---|---|---|---|---|---|---|
| | | | | Still Air (0 LFM) | 250 LFM | 500 LFM | 750 LFM | |
| VQ100 VQG100 | XC3S50A | 12.9 | 30.1 | 48.5 | 40.4 | 37.6 | 36.6 | °C/Watt |
| | XC3S200A | 10.9 | 25.7 | 42.9 | 35.7 | 33.2 | 32.4 | °C/Watt |
| TQ144 TQG144 | XC3S50A | 16.5 | 32.0 | 42.4 | 36.3 | 35.8 | 34.9 | °C/Watt |
| FT256 FTG256 | XC3S50A | 16.0 | 33.5 | 42.3 | 35.6 | 35.5 | 34.5 | °C/Watt |
| | XC3S200A | 10.3 | 23.8 | 32.7 | 26.6 | 26.1 | 25.2 | °C/Watt |
| | XC3S400A | 8.4 | 19.3 | 29.9 | 24.9 | 23.0 | 22.3 | °C/Watt |
| | XC3S700A | 7.8 | 18.6 | 28.1 | 22.3 | 21.2 | 20.7 | °C/Watt |
| | XC3S1400A | 5.4 | 14.1 | 24.2 | 18.7 | 17.5 | 17.0 | °C/Watt |
| FG320 FGG320 | XC3S200A | 11.7 | 18.5 | 27.8 | 22.3 | 21.1 | 20.3 | °C/Watt |
| | XC3S400A | 9.9 | 15.4 | 25.2 | 19.8 | 18.6 | 17.8 | °C/Watt |
| FG400 FGG400 | XC3S400A | 9.8 | 15.5 | 25.6 | 19.2 | 18.0 | 17.3 | °C/Watt |
| | XC3S700A | 8.2 | 13.0 | 23.1 | 17.9 | 16.7 | 16.0 | °C/Watt |
| FG484 FGG484 | XC3S700A | 7.9 | 12.8 | 22.3 | 17.4 | 16.2 | 15.5 | °C/Watt |
| | XC3S1400A | 6.0 | 9.9 | 19.5 | 14.7 | 13.5 | 12.8 | °C/Watt |
| FG676 FGG676 | XC3S1400A | 5.8 | 9.4 | 17.8 | 13.5 | 12.4 | 11.8 | °C/Watt |

## VQ100: 100-lead Very Thin Quad Flat Package

The XC3S50A and XC3S200 are available in the 100-lead very thin quad flat package, VQ100.

Table 62 lists all the package pins. They are sorted by bank number and then by pin name. Pins that form a differential I/O pair appear together in the table. The table also shows the pin number for each pin and the pin type, as defined earlier.

The VQ100 does not support Suspend mode (SUSPEND and AWAKE are not connected), the address output pins for the Byte-wide Peripheral Interface (BPI) configuration mode, or daisy chain configuration (DOUT is not connected).

Table 62 also indicates that some differential I/O pairs have different assignments between the XC3S50A and the XC3S200A, highlighted in light blue. See "Footprint Migration Differences," page 72 for additional information.

An electronic version of this package pinout table and footprint diagram is available for download from the Xilinx website at

www.xilinx.com/support/documentation/data_sheets/s3a_pin.zip.

### Pinout Table

*Table 62:* **Spartan-3A VQ100 Pinout**

| Bank | Pin Name | Pin | Type |
|---|---|---|---|
| 0 | IO_0/GCLK11 | P90 | CLK |
| 0 | IO_L01N_0 | P78 | IO |
| 0 | IO_L01P_0/VREF_0 | P77 | VREF |
| 0 | IO_L02N_0/GCLK5 | P84 | CLK |
| 0 | IO_L02P_0/GCLK4 | P83 | CLK |
| 0 | IO_L03N_0/GCLK7 | P86 | CLK |
| 0 | IO_L03P_0/GCLK6 | P85 | CLK |
| 0 | IO_L04N_0/GCLK9 | P89 | CLK |
| 0 | IO_L04P_0/GCLK8 | P88 | CLK |
| 0 | IO_L05N_0 | P94 | IO |
| 0 | IO_L05P_0 | P93 | IO |
| 0 | IO_L06N_0/PUDC_B | P99 | DUAL |
| 0 | IO_L06P_0/VREF_0 | P98 | VREF |
| 0 | IP_0 | P97 | IP |
| 0 | IP_0/VREF_0 | P82 | VREF |
| 0 | VCCO_0 | P79 | VCCO |
| 0 | VCCO_0 | P96 | VCCO |
| 1 | IO_L01N_1 | P57 | IO |
| 1 | IO_L01P_1 | P56 | IO |
| 1 | IO_L02N_1/RHCLK1 | P60 | CLK |

*Table 62:* **Spartan-3A VQ100 Pinout*(Continued)***

| | | | |
|---|---|---|---|
| 1 | IO_L02P_1/RHCLK0 | P59 | CLK |
| 1 | IO_L03N_1/TRDY1/RHCLK3 | P62 | CLK |
| 1 | IO_L03P_1/RHCLK2 | P61 | CLK |
| 1 | IO_L04N_1/RHCLK7 | P65 | CLK |
| 1 | IO_L04P_1/IRDY1/RHCLK6 | P64 | CLK |
| 1 | IO_L05N_1 | P71 | IO |
| 1 | IO_L05P_1 | P70 | IO |
| 1 | IO_L06N_1 | P73 | IO |
| 1 | IO_L06P_1 | P72 | IO |
| 1 | IP_1/VREF_1 | P68 | VREF |
| 1 | VCCO_1 | P67 | VCCO |
| 2 | IO_2/MOSI/CSI_B | P46 | DUAL |
| 2 | IO_L01N_2/M0 | P25 | DUAL |
| 2 | IO_L01P_2/M1 | P23 | DUAL |
| 2 | IO_L02N_2/CSO_B | P27 | DUAL |
| 2 | IO_L02P_2/M2 | P24 | DUAL |
| 2 | IO_L03N_2/VS1 (3S50A)<br>IO_L04P_2/VS1 (3S200A) | P30 | DUAL |
| 2 | IO_L03P_2/RDWR_B | P28 | DUAL |
| 2 | IO_L04N_2/VS0 | P31 | DUAL |
| 2 | IO_L04P_2/VS2 (3S50A)<br>IO_L03N_2/VS2 (3S200A) | P29 | DUAL |
| 2 | IO_L05N_2/D7 (3S50A)<br>IO_L06P_2/D7 (3S200A) | P34 | DUAL |
| 2 | IO_L05P_2 | P32 | IO |
| 2 | IO_L06N_2/D6 | P35 | DUAL |
| 2 | IO_L06P_2 (3S50A)<br>IO_L05N_2 (3S200A) | P33 | IO |
| 2 | IO_L07N_2/D4 | P37 | DUAL |
| 2 | IO_L07P_2/D5 | P36 | DUAL |
| 2 | IO_L08N_2/GCLK15 | P41 | CLK |
| 2 | IO_L08P_2/GCLK14 | P40 | CLK |
| 2 | IO_L09N_2/GCLK1 | P44 | CLK |
| 2 | IO_L09P_2/GCLK0 | P43 | CLK |
| 2 | IO_L10N_2/D3 | P49 | DUAL |
| 2 | IO_L10P_2/INIT_B | P48 | DUAL |
| 2 | IO_L11N_2/D0/DIN/MISO (3S50A)<br>IO_L12P_2/D0/DIN/MISO (3S200A) | P51 | DUAL |
| 2 | IO_L11P_2/D2 | P50 | DUAL |
| 2 | IO_L12N_2/CCLK | P53 | DUAL |

*Table 62:* **Spartan-3A VQ100 Pinout*(Continued)***

| | | | |
|---|---|---|---|
| 2 | IO_L12P_2/D1 (3S50A)<br>IO_L11N_2/D1 (3S200A) | P52 | DUAL |
| 2 | IP_2/VREF_2 | P39 | VREF |
| 2 | VCCO_2 | P26 | VCCO |
| 2 | VCCO_2 | P45 | VCCO |
| 3 | IO_L01N_3 | P4 | IO |
| 3 | IO_L01P_3 | P3 | IO |
| 3 | IO_L02N_3 | P6 | IO |
| 3 | IO_L02P_3 | P5 | IO |
| 3 | IO_L03N_3/LHCLK1 | P10 | CLK |
| 3 | IO_L03P_3/LHCLK0 | P9 | CLK |
| 3 | IO_L04N_3/IRDY2/LHCLK3 | P13 | CLK |
| 3 | IO_L04P_3/LHCLK2 | P12 | CLK |
| 3 | IO_L05N_3/LHCLK7 | P16 | CLK |
| 3 | IO_L05P_3/TRDY2/LHCLK6 | P15 | CLK |
| 3 | IO_L06N_3 | P20 | IO |
| 3 | IO_L06P_3 | P19 | IO |
| 3 | IP_3 | P21 | IP |
| 3 | IP_3/VREF_3 | P7 | VREF |
| 3 | VCCO_3 | P11 | VCCO |
| GND | GND | P14 | GND |
| GND | GND | P18 | GND |
| GND | GND | P42 | GND |
| GND | GND | P47 | GND |
| GND | GND | P58 | GND |
| GND | GND | P63 | GND |
| GND | GND | P69 | GND |
| GND | GND | P74 | GND |
| GND | GND | P8 | GND |
| GND | GND | P80 | GND |
| GND | GND | P87 | GND |
| GND | GND | P91 | GND |
| GND | GND | P95 | GND |
| VCCAUX | DONE | P54 | CONFIG |
| VCCAUX | PROG_B | P100 | CONFIG |
| VCCAUX | TCK | P76 | JTAG |
| VCCAUX | TDI | P2 | JTAG |
| VCCAUX | TDO | P75 | JTAG |
| VCCAUX | TMS | P1 | JTAG |
| VCCAUX | VCCAUX | P22 | VCCAUX |
| VCCAUX | VCCAUX | P55 | VCCAUX |
| VCCAUX | VCCAUX | P92 | VCCAUX |

*Table 62:* **Spartan-3A VQ100 Pinout*(Continued)***

| | | | |
|---|---|---|---|
| VCCINT | VCCINT | P17 | VCCINT |
| VCCINT | VCCINT | P38 | VCCINT |
| VCCINT | VCCINT | P66 | VCCINT |
| VCCINT | VCCINT | P81 | VCCINT |

## User I/Os by Bank

Table 63 indicates how the 68 available user-I/O pins are distributed between the four I/O banks on the VQ100 package.

*Table 63:* **User I/Os Per Bank for the XC3S50A and XC3S200A in the VQ100 Package**

| Package Edge | I/O Bank | Maximum I/O | All Possible I/O Pins by Type | | | | |
|---|---|---|---|---|---|---|---|
| | | | I/O | INPUT | DUAL | VREF | CLK |
| Top | 0 | 15 | 3 | 1 | 1 | 3 | 7 |
| Right | 1 | 13 | 6 | 0 | 0 | 1 | 6 |
| Bottom | 2 | 26 | 2 | 0 | 19 | 1 | 4 |
| Left | 3 | 14 | 6 | 1 | 0 | 1 | 6 |
| **TOTAL** | | **68** | **17** | **2** | **20** | **6** | **23** |

## Footprint Migration Differences

The XC3S50A and XC3S200 have common VQ100 pinouts except for some differences in alignment of differential I/O pairs.

### Differential I/O Alignment Differences

Some differential I/O pairs in the VQ100 on the XC3S50A FPGA are aligned differently than the corresponding pairs on the XC3S200A FPGAs, as shown in Table 64. All the mismatched pairs are in I/O Bank 2. These differences are indicated with the black diamond character (◆) in the footprint diagrams Figure 17 and Figure 18.

*Table 64:* **Differential I/O Differences in VQ100**

| VQ100 Pin | Bank | XC3S50A | XC3S200A |
|---|---|---|---|
| P29 | 2 | IIO_L04P_2/VS2 | IO_L03N_2/VS2 |
| P30 | | IO_L03N_2/VS1 | IO_L04P_2/VS1 |
| P33 | | IO_L06P_2 | IO_L05N_2 |
| P34 | | IO_L05N_2/D7 | IO_L06P_2/D7 |
| P51 | | IO_L11N_2/D0/DIN/MISO | IO_L12P_2/D0/DIN/MISO |
| P52 | | IO_L12P_2/D1 | IO_L11N_2/D1 |

## VQ100 Footprint (XC3S50A)

Note pin 1 indicator in top-left corner and logo orientation.

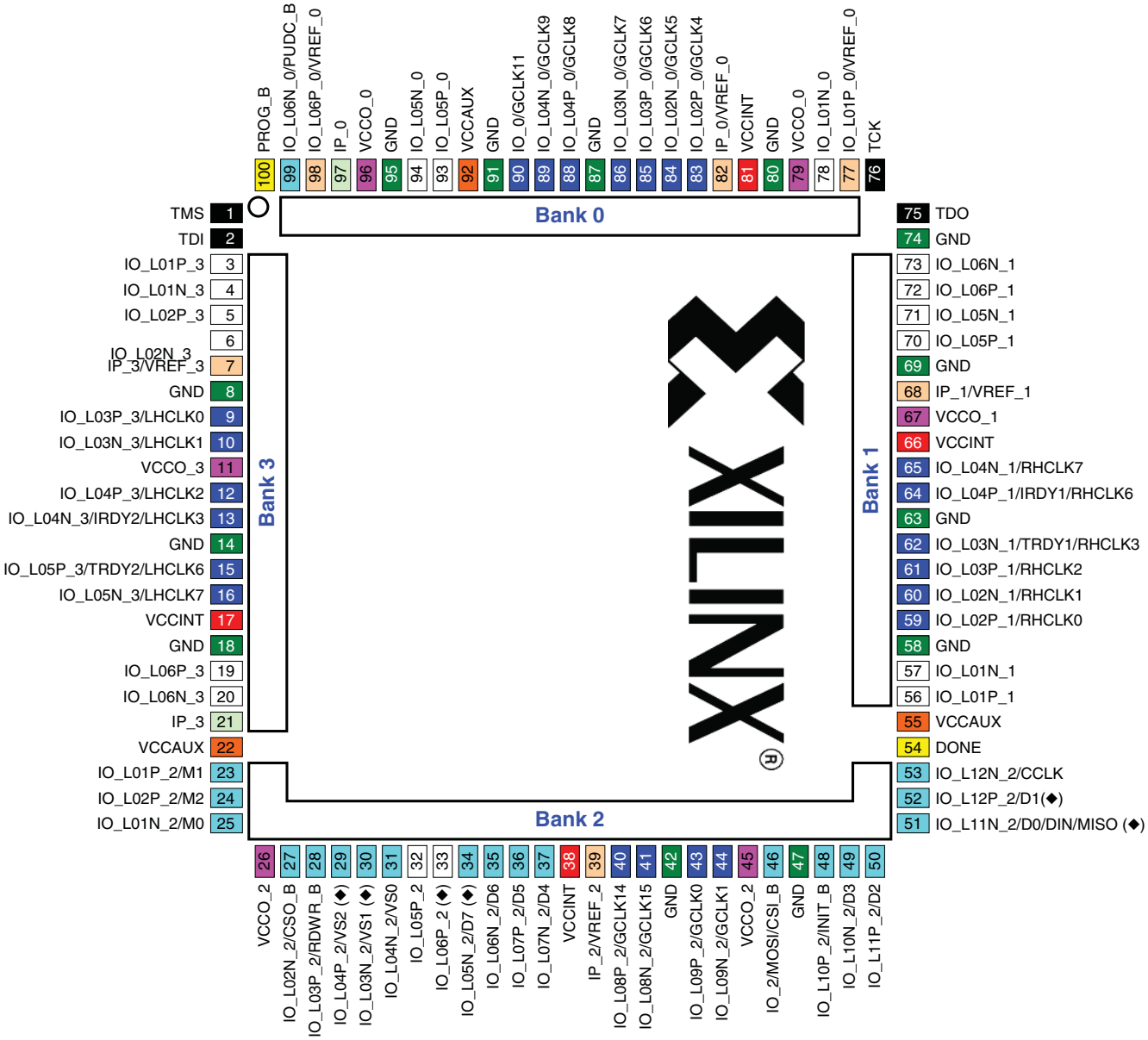


*Figure 17:* **VQ100 Package Footprint - XC3S50A (Top View)**

| | | | | | |
|---|---|---|---|---|---|
| 17 | **I/O:** Unrestricted, general-purpose user I/O | 20 | **DUAL:** Configuration pins, then possible user I/O | 6 | **VREF:** User I/O or input voltage reference for bank |
| 2 | **INPUT:** Unrestricted, general-purpose input pin | 23 | **CLK:** User I/O, input, or global buffer input | 6 | **VCCO:** Output voltage supply for bank |
| 2 | **CONFIG:** Dedicated configuration pins | 4 | **JTAG:** Dedicated JTAG port pins | 4 | **VCCINT:** Internal core supply voltage (+1.2V) |
| 0 | **N.C.:** Not connected | 13 | **GND:** Ground | 3 | **VCCAUX:** Auxiliary supply voltage |

## VQ100 Footprint (XC3S200A)

Note pin 1 indicator in top-left corner and logo orientation.

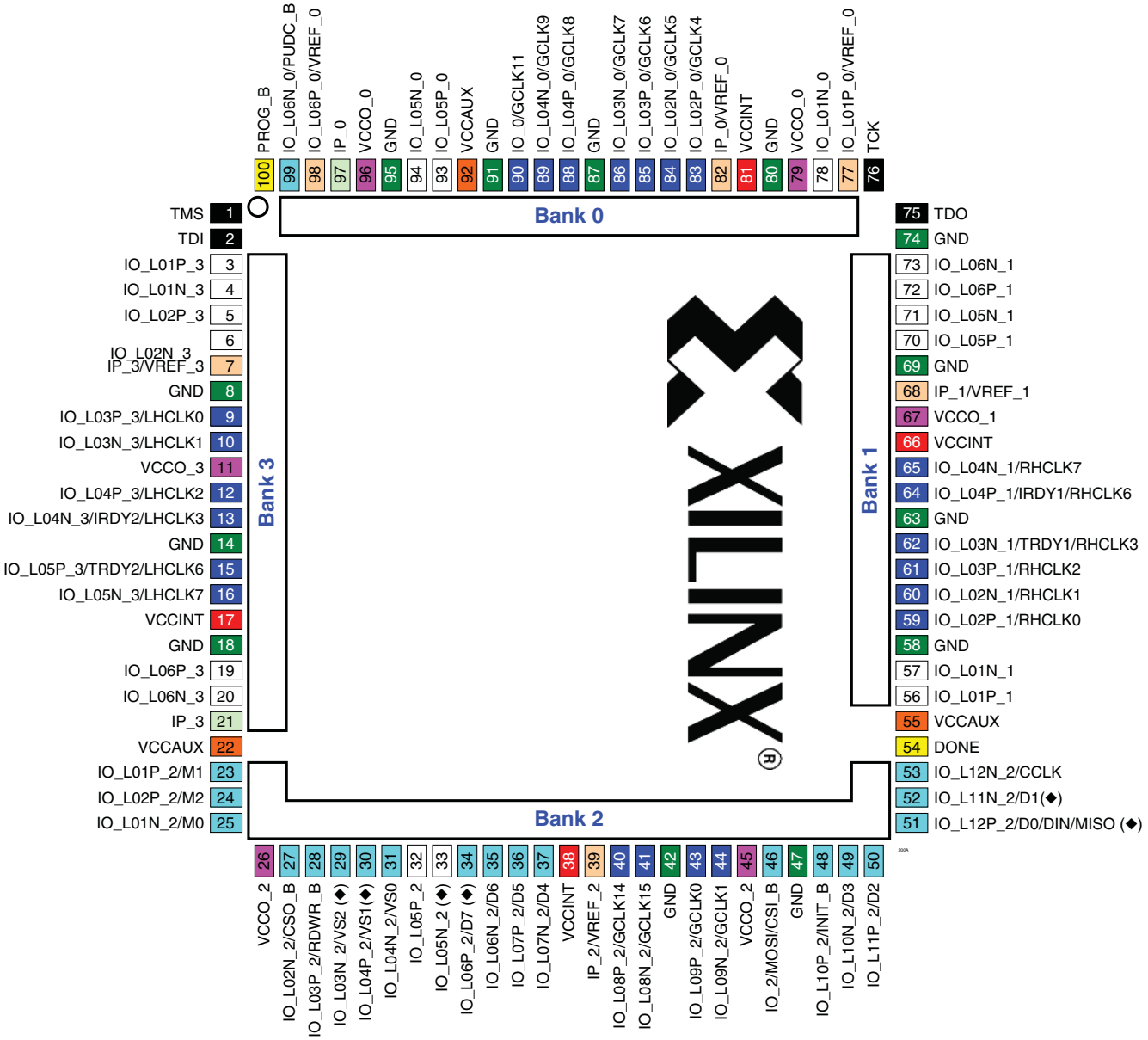


*Figure 18:* **VQ100 Package Footprint - XC3S200A (Top View)**

| | | | | | |
|---|---|---|---|---|---|
| 17 | **I/O:** Unrestricted, general-purpose user I/O | 20 | **DUAL:** Configuration pins, then possible user I/O | 6 | **VREF:** User I/O or input voltage reference for bank |
| 2 | **INPUT:** Unrestricted, general-purpose input pin | 23 | **CLK:** User I/O, input, or global buffer input | 6 | **VCCO:** Output voltage supply for bank |
| 2 | **CONFIG:** Dedicated configuration pins | 4 | **JTAG:** Dedicated JTAG port pins | 4 | **VCCINT:** Internal core supply voltage (+1.2V) |
| 0 | **N.C.:** Not connected | 13 | **GND:** Ground | 3 | **VCCAUX:** Auxiliary supply voltage |

## TQ144: 144-lead Thin Quad Flat Package

The XC3S50A is available in the 144-lead thin quad flat package, TQ144.

Table 65 lists all the package pins. They are sorted by bank number and then by pin name. Pins that form a differential I/O pair appear together in the table. The table also shows the pin number for each pin and the pin type, as defined earlier.

The XC3S50A does not support the address output pins for the Byte-wide Peripheral Interface (BPI) configuration mode.

An electronic version of this package pinout table and footprint diagram is available for download from the Xilinx website at

www.xilinx.com/support/documentation/data_sheets/s3a_pin.zip.

### Pinout Table

*Table 65:* **Spartan-3A TQ144 Pinout**

| Bank | Pin Name | Pin | Type |
|---|---|---|---|
| 0 | IO_0 | P142 | I/O |
| 0 | IO_L01N_0 | P111 | I/O |
| 0 | IO_L01P_0 | P110 | I/O |
| 0 | IO_L02N_0 | P113 | I/O |
| 0 | IO_L02P_0/VREF_0 | P112 | VREF |
| 0 | IO_L03N_0 | P117 | I/O |
| 0 | IO_L03P_0 | P115 | I/O |
| 0 | IO_L04N_0 | P116 | I/O |
| 0 | IO_L04P_0 | P114 | I/O |
| 0 | IO_L05N_0 | P121 | I/O |
| 0 | IO_L05P_0 | P120 | I/O |
| 0 | IO_L06N_0/GCLK5 | P126 | GCLK |
| 0 | IO_L06P_0/GCLK4 | P124 | GCLK |
| 0 | IO_L07N_0/GCLK7 | P127 | GCLK |
| 0 | IO_L07P_0/GCLK6 | P125 | GCLK |
| 0 | IO_L08N_0/GCLK9 | P131 | GCLK |
| 0 | IO_L08P_0/GCLK8 | P129 | GCLK |
| 0 | IO_L09N_0/GCLK11 | P132 | GCLK |
| 0 | IO_L09P_0/GCLK10 | P130 | GCLK |
| 0 | IO_L10N_0 | P135 | I/O |
| 0 | IO_L10P_0 | P134 | I/O |
| 0 | IO_L11N_0 | P139 | I/O |
| 0 | IO_L11P_0 | P138 | I/O |
| 0 | IO_L12N_0/PUDC_B | P143 | DUAL |
| 0 | IO_L12P_0/VREF_0 | P141 | VREF |
| 0 | IP_0 | P140 | INPUT |

*Table 65:* **Spartan-3A TQ144 Pinout*(Continued)***

| Bank | Pin Name | Pin | Type |
|---|---|---|---|
| 0 | IP_0/VREF_0 | P123 | VREF |
| 0 | VCCO_0 | P119 | VCCO |
| 0 | VCCO_0 | P136 | VCCO |
| 1 | IO_1 | P79 | I/O |
| 1 | IO_L01N_1/LDC2 | P78 | DUAL |
| 1 | IO_L01P_1/HDC | P76 | DUAL |
| 1 | IO_L02N_1/LDC0 | P77 | DUAL |
| 1 | IO_L02P_1/LDC1 | P75 | DUAL |
| 1 | IO_L03N_1 | P84 | I/O |
| 1 | IO_L03P_1 | P82 | I/O |
| 1 | IO_L04N_1/RHCLK1 | P85 | RHCLK |
| 1 | IO_L04P_1/RHCLK0 | P83 | RHCLK |
| 1 | IO_L05N_1/TRDY1/RHCLK3 | P88 | RHCLK |
| 1 | IO_L05P_1/RHCLK2 | P87 | RHCLK |
| 1 | IO_L06N_1/RHCLK5 | P92 | RHCLK |
| 1 | IO_L06P_1/RHCLK4 | P90 | RHCLK |
| 1 | IO_L07N_1/RHCLK7 | P93 | RHCLK |
| 1 | IO_L07P_1/IRDY1/RHCLK6 | P91 | RHCLK |
| 1 | IO_L08N_1 | P98 | I/O |
| 1 | IO_L08P_1 | P96 | I/O |
| 1 | IO_L09N_1 | P101 | I/O |
| 1 | IO_L09P_1 | P99 | I/O |
| 1 | IO_L10N_1 | P104 | I/O |
| 1 | IO_L10P_1 | P102 | I/O |
| 1 | IO_L11N_1 | P105 | I/O |
| 1 | IO_L11P_1 | P103 | I/O |
| 1 | IP_1/VREF_1 | P80 | VREF |
| 1 | IP_1/VREF_1 | P97 | VREF |
| 1 | VCCO_1 | P86 | VCCO |
| 1 | VCCO_1 | P95 | VCCO |
| 2 | IO_2/MOSI/CSI_B | P62 | DUAL |
| 2 | IO_L01N_2/M0 | P38 | DUAL |
| 2 | IO_L01P_2/M1 | P37 | DUAL |
| 2 | IO_L02N_2/CSO_B | P41 | DUAL |
| 2 | IO_L02P_2/M2 | P39 | DUAL |
| 2 | IO_L03N_2/VS1 | P44 | DUAL |
| 2 | IO_L03P_2/RDWR_B | P42 | DUAL |
| 2 | IO_L04N_2/VS0 | P45 | DUAL |
| 2 | IO_L04P_2/VS2 | P43 | DUAL |
| 2 | IO_L05N_2/D7 | P48 | DUAL |

*Table 65:* **Spartan-3A TQ144 Pinout*(Continued)***

| Bank | Pin Name | Pin | Type |
|---|---|---|---|
| 2 | IO_L05P_2 | P46 | I/O |
| 2 | IO_L06N_2/D6 | P49 | DUAL |
| 2 | IO_L06P_2 | P47 | I/O |
| 2 | IO_L07N_2/D4 | P51 | DUAL |
| 2 | IO_L07P_2/D5 | P50 | DUAL |
| 2 | IO_L08N_2/GCLK15 | P55 | GCLK |
| 2 | IO_L08P_2/GCLK14 | P54 | GCLK |
| 2 | IO_L09N_2/GCLK1 | P59 | GCLK |
| 2 | IO_L09P_2/GCLK0 | P57 | GCLK |
| 2 | IO_L10N_2/GCLK3 | P60 | GCLK |
| 2 | IO_L10P_2/GCLK2 | P58 | GCLK |
| 2 | IO_L11N_2/DOUT | P64 | DUAL |
| 2 | IO_L11P_2/AWAKE | P63 | PWR MGMT |
| 2 | IO_L12N_2/D3 | P68 | DUAL |
| 2 | IO_L12P_2/INIT_B | P67 | DUAL |
| 2 | IO_L13N_2/D0/DIN/MISO | P71 | DUAL |
| 2 | IO_L13P_2/D2 | P69 | DUAL |
| 2 | IO_L14N_2/CCLK | P72 | DUAL |
| 2 | IO_L14P_2/D1 | P70 | DUAL |
| 2 | IP_2/VREF_2 | P53 | VREF |
| 2 | VCCO_2 | P40 | VCCO |
| 2 | VCCO_2 | P61 | VCCO |
| 3 | IO_L01N_3 | P6 | I/O |
| 3 | IO_L01P_3 | P4 | I/O |
| 3 | IO_L02N_3 | P5 | I/O |
| 3 | IO_L02P_3 | P3 | I/O |
| 3 | IO_L03N_3 | P8 | I/O |
| 3 | IO_L03P_3 | P7 | I/O |
| 3 | IO_L04N_3/VREF_3 | P11 | VREF |
| 3 | IO_L04P_3 | P10 | I/O |
| 3 | IO_L05N_3/LHCLK1 | P13 | LHCLK |
| 3 | IO_L05P_3/LHCLK0 | P12 | LHCLK |
| 3 | IO_L06N_3/IRDY2/LHCLK3 | P16 | LHCLK |
| 3 | IO_L06P_3/LHCLK2 | P15 | LHCLK |
| 3 | IO_L07N_3/LHCLK5 | P20 | LHCLK |
| 3 | IO_L07P_3/LHCLK4 | P18 | LHCLK |
| 3 | IO_L08N_3/LHCLK7 | P21 | LHCLK |
| 3 | IO_L08P_3/TRDY2/LHCLK6 | P19 | LHCLK |
| 3 | IO_L09N_3 | P25 | I/O |
| 3 | IO_L09P_3 | P24 | I/O |
| 3 | IO_L10N_3 | P29 | I/O |

*Table 65:* **Spartan-3A TQ144 Pinout*(Continued)***

| Bank | Pin Name | Pin | Type |
|---|---|---|---|
| 3 | IO_L10P_3 | P27 | I/O |
| 3 | IO_L11N_3 | P30 | I/O |
| 3 | IO_L11P_3 | P28 | I/O |
| 3 | IO_L12N_3 | P32 | I/O |
| 3 | IO_L12P_3 | P31 | I/O |
| 3 | IP_L13N_3/VREF_3 | P35 | VREF |
| 3 | IP_L13P_3 | P33 | INPUT |
| 3 | VCCO_3 | P14 | VCCO |
| 3 | VCCO_3 | P23 | VCCO |
| GND | GND | P9 | GND |
| GND | GND | P17 | GND |
| GND | GND | P26 | GND |
| GND | GND | P34 | GND |
| GND | GND | P56 | GND |
| GND | GND | P65 | GND |
| GND | GND | P81 | GND |
| GND | GND | P89 | GND |
| GND | GND | P100 | GND |
| GND | GND | P106 | GND |
| GND | GND | P118 | GND |
| GND | GND | P128 | GND |
| GND | GND | P137 | GND |
| VCCAUX | SUSPEND | P74 | PWR MGMT |
| VCCAUX | DONE | P73 | CONFIG |
| VCCAUX | PROG_B | P144 | CONFIG |
| VCCAUX | TCK | P109 | JTAG |
| VCCAUX | TDI | P2 | JTAG |
| VCCAUX | TDO | P107 | JTAG |
| VCCAUX | TMS | P1 | JTAG |
| VCCAUX | VCCAUX | P36 | VCCAUX |
| VCCAUX | VCCAUX | P66 | VCCAUX |
| VCCAUX | VCCAUX | P108 | VCCAUX |
| VCCAUX | VCCAUX | P133 | VCCAUX |
| VCCINT | VCCINT | P22 | VCCINT |
| VCCINT | VCCINT | P52 | VCCINT |
| VCCINT | VCCINT | P94 | VCCINT |
| VCCINT | VCCINT | P122 | VCCINT |

## User I/Os by Bank

Table 66 indicates how the 108 available user-I/O pins are distributed between the four I/O banks on the TQ144 package. The AWAKE pin is counted as a dual-purpose I/O.

*Table 66:* **User I/Os Per Bank for the XC3S50A in the TQ144 Package**

| Package Edge | I/O Bank | Maximum I/O | All Possible I/O Pins by Type | | | | |
|---|---|---|---|---|---|---|---|
| | | | I/O | INPUT | DUAL | VREF | CLK |
| Top | 0 | 27 | 14 | 1 | 1 | 3 | 8 |
| Right | 1 | 25 | 11 | 0 | 4 | 2 | 8 |
| Bottom | 2 | 30 | 2 | 0 | 21 | 1 | 6 |
| Left | 3 | 26 | 15 | 1 | 0 | 2 | 8 |
| **TOTAL** | | **108** | **42** | **2** | **26** | **8** | **30** |

## Footprint Migration Differences

The XC3S50A FPGA is the only Spartan-3A device offered in the TQ144 package.

## TQ144 Footprint

Note pin 1 indicator in top-left corner and logo orientation.

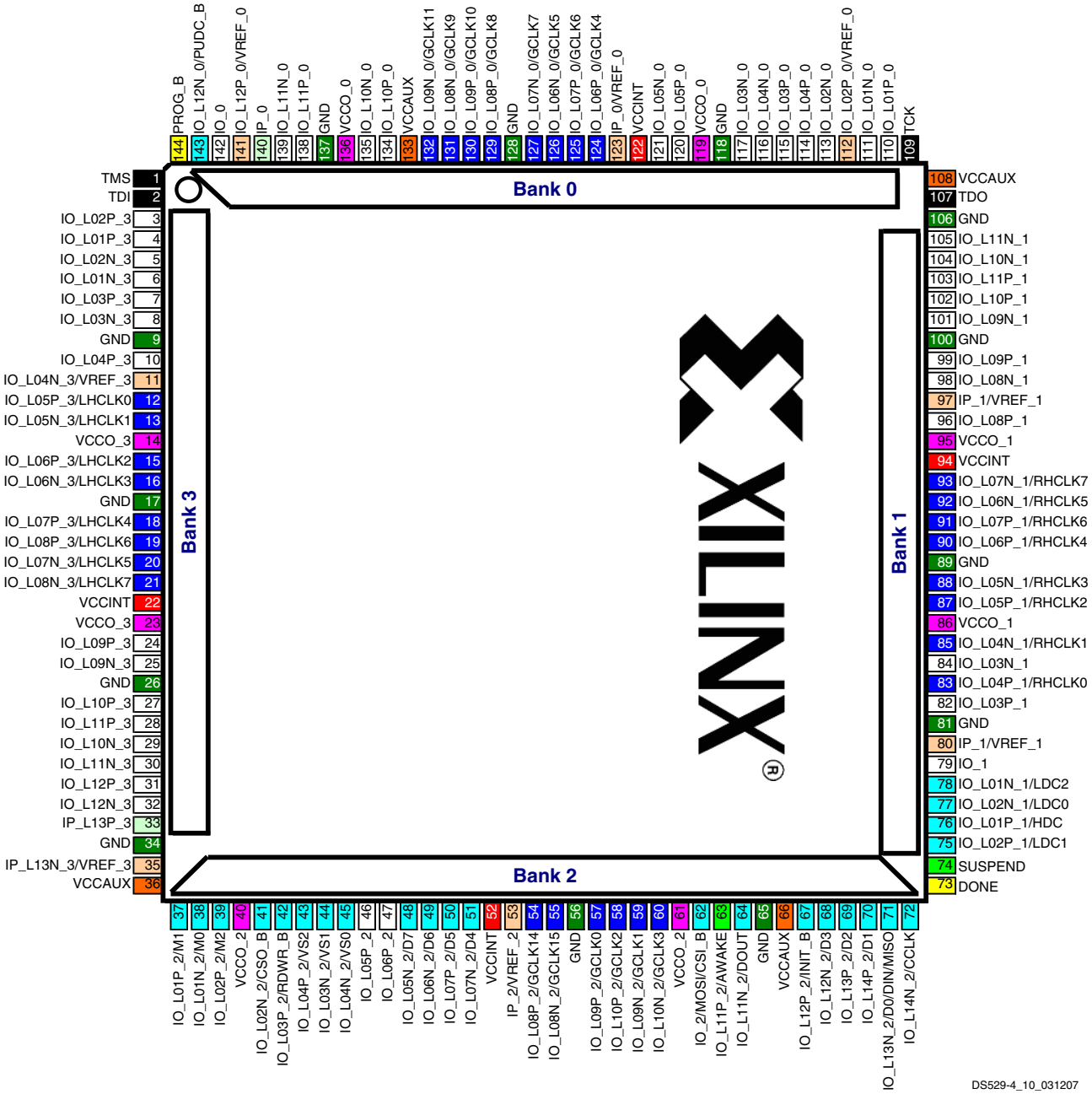


*Figure 19:* **TQ144 Package Footprint (Top View)**

| | | | | | |
|---|---|---|---|---|---|
| 42 | **I/O:** Unrestricted, general-purpose user I/O | 25 | **DUAL:** Configuration pins, then possible user I/O | 8 | **VREF:** User I/O or input voltage reference for bank |
| 2 | **INPUT:** Unrestricted, general-purpose input pin | 30 | **CLK:** User I/O, input, or global buffer input | 8 | **VCCO:** Output voltage supply for bank |
| 2 | **CONFIG:** Dedicated configuration pins | 4 | **JTAG:** Dedicated JTAG port pins | 4 | **VCCINT:** Internal core supply voltage (+1.2V) |
| 0 | **N.C.:** Not connected | 13 | **GND:** Ground | 4 | **VCCAUX:** Auxiliary supply voltage |
| 2 | **SUSPEND:** Dedicated SUSPEND and dual-purpose AWAKE Power Management pins | | | | |

## FT256: 256-ball Fine-pitch, Thin Ball Grid Array

The 256-ball fine-pitch, thin ball grid array package, FT256, supports all five Spartan-3A FPGAs. The XC3S200A and XC3S400A have identical footprints, and the XC3S700A and XC3S1400A have identical footprints. The XC3S50A is compatible with the XC3S200A/XC3S400A but has 51 unconnected balls. The XC3S200A/XC3S400A is similar to the XC3S700A/XC3S1400A, but the XC3S700A/XC3S1400A adds more power and ground pins and therefore is not compatible.

Table 67 lists all the package pins for the XC3S50A, XC3S200A, and XC3S400A. They are sorted by bank number and then by pin name of the largest device. Pins that form a differential I/O pair appear together in the table. The table also shows the pin number for each pin and the pin type, as defined earlier.

The highlighted rows indicate pinout differences between the XC3S50A, the XC3S200A, and the XC3S400A FPGAs. The XC3S50A has 51 unconnected balls, indicated as N.C. (No Connection) in Table 67 and Figure 20 and with the black diamond character (◆) in Table 67. Figure 21 provides the common footprint for the XC3S200A and XC3S400A.

Table 67 also indicates that some differential I/O pairs have different assignments between the XC3S50A and the XC3S200A/XC3S400A, highlighted in light blue. See "Footprint Migration Differences," page 99 for additional information.

All other balls have nearly identical functionality on all three devices. Table 72 summarizes the XC3S50A FPGA footprint migration differences for the FT256 package.

The XC3S50A does not support the address output pins for the Byte-wide Peripheral Interface (BPI) configuration mode.

Table 68 lists all the package pins for the XC3S700A and XC3S1400A. They are sorted by bank number and then by pin name. Pins that form a differential I/O pair appear together in the table. The table also shows the pin number for each pin and the pin type, as defined earlier. Figure 22 provides the common footprint for the XC3S200A and XC3S400A.

An electronic version of this package pinout table and footprint diagram is available for download from the Xilinx website at

www.xilinx.com/support/documentation/data_sheets/s3a_pin.zip.

### Pinout Table

*Table 67:* **Spartan-3A FT256 Pinout (XC3S50A, XC3S200A, XC3S400)**

| Bank | XC3S50A | XC3S200A XC3S400A | FT256 Ball | Type |
|---|---|---|---|---|
| 0 | IO_L01N_0 | IO_L01N_0 | C13 | I/O |
| 0 | IO_L01P_0 | IO_L01P_0 | D13 | I/O |
| 0 | IO_L02N_0 | IO_L02N_0 | B14 | I/O |
| 0 | IO_L02P_0/ VREF_0 | IO_L02P_0/ VREF_0 | B15 | VREF |
| 0 | IO_L03N_0 | IO_L03N_0 | D11 | I/O |
| 0 | IO_L03P_0 | IO_L03P_0 | C12 | I/O |
| 0 | IO_L04N_0 | IO_L04N_0 | A13 | I/O |
| 0 | IO_L04P_0 | IO_L04P_0 | A14 | I/O |
| 0 | N.C. (◆) | IO_L05N_0 | A12 | I/O |
| 0 | IP_0 | IO_L05P_0 | B12 | I/O |
| 0 | N.C. (◆) | IO_L06N_0/ VREF_0 | E10 | VREF |
| 0 | N.C. (◆) | IO_L06P_0 | D10 | I/O |
| 0 | IO_L07N_0 | IO_L07N_0 | A11 | I/O |
| 0 | IO_L07P_0 | IO_L07P_0 | C11 | I/O |
| 0 | IO_L08N_0 | IO_L08N_0 | A10 | I/O |
| 0 | IO_L08P_0 | IO_L08P_0 | B10 | I/O |
| 0 | IO_L09N_0/ GCLK5 | IO_L09N_0/ GCLK5 | D9 | GCLK |
| 0 | IO_L09P_0/ GCLK4 | IO_L09P_0/ GCLK4 | C10 | GCLK |
| 0 | IO_L10N_0/ GCLK7 | IO_L10N_0/ GCLK7 | A9 | GCLK |
| 0 | IO_L10P_0/ GCLK6 | IO_L10P_0/ GCLK6 | C9 | GCLK |
| 0 | IO_L11N_0/ GCLK9 | IO_L11N_0/ GCLK9 | D8 | GCLK |
| 0 | IO_L11P_0/ GCLK8 | IO_L11P_0/ GCLK8 | C8 | GCLK |
| 0 | IO_L12N_0/ GCLK11 | IO_L12N_0/ GCLK11 | B8 | GCLK |
| 0 | IO_L12P_0/ GCLK10 | IO_L12P_0/ GCLK10 | A8 | GCLK |
| 0 | N.C. (◆) | IO_L13N_0 | C7 | I/O |
| 0 | N.C. (◆) | IO_L13P_0 | A7 | I/O |
| 0 | N.C. (◆) | IO_L14N_0/ VREF_0 | E7 | VREF |
| 0 | N.C. (◆) | IO_L14P_0 | F8 | I/O |
| 0 | IO_L15N_0 | IO_L15N_0 | B6 | I/O |
| 0 | IO_L15P_0 | IO_L15P_0 | A6 | I/O |
| 0 | IO_L16N_0 | IO_L16N_0 | C6 | I/O |
| 0 | IO_L16P_0 | IO_L16P_0 | D7 | I/O |
| 0 | IO_L17N_0 | IO_L17N_0 | C5 | I/O |

*Table 67:* **Spartan-3A FT256 Pinout (XC3S50A, XC3S200A, XC3S400) *(Continued)***

| Bank | XC3S50A | XC3S200A XC3S400A | FT256 Ball | Type |
|---|---|---|---|---|
| 0 | IO_L17P_0 | IO_L17P_0 | A5 | I/O |
| 0 | IO_L18N_0 | IO_L18N_0 | B4 | I/O |
| 0 | IO_L18P_0 | IO_L18P_0 | A4 | I/O |
| 0 | IO_L19N_0 | IO_L19N_0 | B3 | I/O |
| 0 | IO_L19P_0 | IO_L19P_0 | A3 | I/O |
| 0 | IO_L20N_0/ PUDC_B | IO_L20N_0/ PUDC_B | D5 | DUAL |
| 0 | IO_L20P_0/ VREF_0 | IO_L20P_0/ VREF_0 | C4 | VREF |
| 0 | IP_0 | IP_0 | D6 | INPUT |
| 0 | IP_0 | IP_0 | D12 | INPUT |
| 0 | IP_0 | IP_0 | E6 | INPUT |
| 0 | IP_0 | IP_0 | F7 | INPUT |
| 0 | IP_0 | IP_0 | F9 | INPUT |
| 0 | IP_0 | IP_0 | F10 | INPUT |
| 0 | IP_0/VREF_0 | IP_0/VREF_0 | E9 | VREF |
| 0 | VCCO_0 | VCCO_0 | B5 | VCCO |
| 0 | VCCO_0 | VCCO_0 | B9 | VCCO |
| 0 | VCCO_0 | VCCO_0 | B13 | VCCO |
| 0 | VCCO_0 | VCCO_0 | E8 | VCCO |
| 1 | IO_L01N_1/ LDC2 | IO_L01N_1/ LDC2 | N14 | DUAL |
| 1 | IO_L01P_1/ HDC | IO_L01P_1/ HDC | N13 | DUAL |
| 1 | IO_L02N_1/ LDC0 | IO_L02N_1/ LDC0 | P15 | DUAL |
| 1 | IO_L02P_1/ LDC1 | IO_L02P_1/ LDC1 | R15 | DUAL |
| 1 | IO_L03N_1 | IO_L03N_1/A1 | N16 | DUAL |
| 1 | IO_L03P_1 | IO_L03P_1/A0 | P16 | DUAL |
| 1 | N.C. (◆) | IO_L05N_1/ VREF_1 | M14 | VREF |
| 1 | N.C. (◆) | IO_L05P_1 | M13 | I/O |
| 1 | N.C. (◆) | IO_L06N_1/A3 | K13 | DUAL |
| 1 | N.C. (◆) | IO_L06P_1/A2 | L13 | DUAL |
| 1 | N.C. (◆) | IO_L07N_1/A5 | M16 | DUAL |
| 1 | N.C. (◆) | IO_L07P_1/A4 | M15 | DUAL |
| 1 | N.C. (◆) | IO_L08N_1/A7 | L16 | DUAL |
| 1 | N.C. (◆) | IO_L08P_1/A6 | L14 | DUAL |
| 1 | IO_L10N_1 | IO_L10N_1/A9 | J13 | DUAL |
| 1 | IO_L10P_1 | IO_L10P_1/A8 | J12 | DUAL |
| 1 | IO_L11N_1/ RHCLK1 | IO_L11N_1/ RHCLK1 | K14 | RHCLK |
| 1 | IO_L11P_1/ RHCLK0 | IO_L11P_1/ RHCLK0 | K15 | RHCLK |

*Table 67:* **Spartan-3A FT256 Pinout (XC3S50A, XC3S200A, XC3S400) *(Continued)***

| Bank | XC3S50A | XC3S200A XC3S400A | FT256 Ball | Type |
|---|---|---|---|---|
| 1 | IO_L12N_1/ TRDY1/RHCLK3 | IO_L12N_1/ TRDY1/RHCLK3 | J16 | RHCLK |
| 1 | IO_L12P_1/ RHCLK2 | IO_L12P_1/ RHCLK2 | K16 | RHCLK |
| 1 | IO_L14N_1/ RHCLK5 | IO_L14N_1/ RHCLK5 | H14 | RHCLK |
| 1 | IO_L14P_1/ RHCLK4 | IO_L14P_1/ RHCLK4 | J14 | RHCLK |
| 1 | IO_L15N_1/ RHCLK7 | IO_L15N_1/ RHCLK7 | H16 | RHCLK |
| 1 | IO_L15P_1/ IRDY1/RHCLK6 | IO_L15P_1/ IRDY1/RHCLK6 | H15 | RHCLK |
| 1 | N.C. (◆) | IO_L16N_1/A11 | F16 | DUAL |
| 1 | N.C. (◆) | IO_L16P_1/A10 | G16 | DUAL |
| 1 | N.C. (◆) | IO_L17N_1/A13 | G14 | DUAL |
| 1 | N.C. (◆) | IO_L17P_1/A12 | H13 | DUAL |
| 1 | N.C. (◆) | IO_L18N_1/A15 | F15 | DUAL |
| 1 | N.C. (◆) | IO_L18P_1/A14 | E16 | DUAL |
| 1 | N.C. (◆) | IO_L19N_1/A17 | F14 | DUAL |
| 1 | N.C. (◆) | IO_L19P_1/A16 | G13 | DUAL |
| 1 | IO_L20N_1 | IO_L20N_1/A19 | F13 | DUAL |
| 1 | IO_L20P_1 | IO_L20P_1/A18 | E14 | DUAL |
| 1 | IO_L22N_1 | IO_L22N_1/A21 | D15 | DUAL |
| 1 | IO_L22P_1 | IO_L22P_1/A20 | D16 | DUAL |
| 1 | IO_L23N_1 | IO_L23N_1/A23 | D14 | DUAL |
| 1 | IO_L23P_1 | IO_L23P_1/A22 | E13 | DUAL |
| 1 | IO_L24N_1 | IO_L24N_1/A25 | C15 | DUAL |
| 1 | IO_L24P_1 | IO_L24P_1/A24 | C16 | DUAL |
| 1 | IP_L04N_1/ VREF_1 | IP_L04N_1/ VREF_1 | K12 | VREF |
| 1 | IP_L04P_1 | IP_L04P_1 | K11 | INPUT |
| 1 | N.C. (◆) | IP_L09N_1 | J11 | INPUT |
| 1 | N.C. (◆) | IP_L09P_1/ VREF_1 | J10 | VREF |
| 1 | IP_L13N_1 | IP_L13N_1 | H11 | INPUT |
| 1 | IP_L13P_1 | IP_L13P_1 | H10 | INPUT |
| 1 | IP_L21N_1 | IP_L21N_1 | G11 | INPUT |
| 1 | IP_L21P_1/ VREF_1 | IP_L21P_1/ VREF_1 | G12 | VREF |
| 1 | IP_L25N_1 | IP_L25N_1 | F11 | INPUT |
| 1 | IP_L25P_1/ VREF_1 | IP_L25P_1/ VREF_1 | F12 | VREF |
| 1 | VCCO_1 | VCCO_1 | E15 | VCCO |
| 1 | VCCO_1 | VCCO_1 | H12 | VCCO |
| 1 | VCCO_1 | VCCO_1 | J15 | VCCO |
| 1 | VCCO_1 | VCCO_1 | N15 | VCCO |

*Table 67:* **Spartan-3A FT256 Pinout (XC3S50A, XC3S200A, XC3S400)** ***(Continued)***

| Bank | XC3S50A | XC3S200A XC3S400A | FT256 Ball | Type |
|---|---|---|---|---|
| 2 | IO_L01N_2/M0 | IO_L01N_2/M0 | P4 | DUAL |
| 2 | IO_L01P_2/M1 | IO_L01P_2/M1 | N4 | DUAL |
| 2 | IO_L02N_2/ CSO_B | IO_L02N_2/ CSO_B | T2 | DUAL |
| 2 | IO_L02P_2/M2 | IO_L02P_2/M2 | R2 | DUAL |
| 2 | IO_L04P_2/VS2 | IO_L03N_2/VS2 | T3 | DUAL |
| 2 | IO_L03P_2/ RDWR_B | IO_L03P_2/ RDWR_B | R3 | DUAL |
| 2 | IO_L04N_2/VS0 | IO_L04N_2/VS0 | P5 | DUAL |
| 2 | IO_L03N_2/VS1 | IO_L04P_2/VS1 | N6 | DUAL |
| 2 | IO_L06P_2 | IO_L05N_2 | R5 | I/O |
| 2 | IO_L05P_2 | IO_L05P_2 | T4 | I/O |
| 2 | IO_L06N_2/D6 | IO_L06N_2/D6 | T6 | DUAL |
| 2 | IO_L05N_2/D7 | IO_L06P_2/D7 | T5 | DUAL |
| 2 | N.C. (◆) | IO_L07N_2 | P6 | I/O |
| 2 | N.C. (◆) | IO_L07P_2 | N7 | I/O |
| 2 | IO_L08N_2/D4 | IO_L08N_2/D4 | N8 | DUAL |
| 2 | IO_L08P_2/D5 | IO_L08P_2/D5 | P7 | DUAL |
| 2 | N.C. (◆) | IO_L09N_2/ GCLK13 | T7 | GCLK |
| 2 | N.C. (◆) | IO_L09P_2/ GCLK12 | R7 | GCLK |
| 2 | IO_L10N_2/ GCLK15 | IO_L10N_2/ GCLK15 | T8 | GCLK |
| 2 | IO_L10P_2/ GCLK14 | IO_L10P_2/ GCLK14 | P8 | GCLK |
| 2 | IO_L11N_2/ GCLK1 | IO_L11N_2/ GCLK1 | P9 | GCLK |
| 2 | IO_L11P_2/ GCLK0 | IO_L11P_2/ GCLK0 | N9 | GCLK |
| 2 | IO_L12N_2/ GCLK3 | IO_L12N_2/ GCLK3 | T9 | GCLK |
| 2 | IO_L12P_2/ GCLK2 | IO_L12P_2/ GCLK2 | R9 | GCLK |
| 2 | N.C. (◆) | IO_L13N_2 | M10 | I/O |
| 2 | N.C. (◆) | IO_L13P_2 | N10 | I/O |
| 2 | IO_L14P_2/ MOSI/CSI_B | IO_L14N_2/ MOSI/CSI_B | P10 | DUAL |
| 2 | IO_L14N_2 | IO_L14P_2 | T10 | I/O |
| 2 | IO_L15N_2/ DOUT | IO_L15N_2/ DOUT | R11 | DUAL |
| 2 | IO_L15P_2/ AWAKE | IO_L15P_2/ AWAKE | T11 | PWR MGMT |
| 2 | IO_L16N_2 | IO_L16N_2 | N11 | I/O |
| 2 | IO_L16P_2 | IO_L16P_2 | P11 | I/O |
| 2 | IO_L17N_2/D3 | IO_L17N_2/D3 | P12 | DUAL |
| 2 | IO_L17P_2/ INIT_B | IO_L17P_2/ INIT_B | T12 | DUAL |

*Table 67:* **Spartan-3A FT256 Pinout (XC3S50A, XC3S200A, XC3S400)** ***(Continued)***

| Bank | XC3S50A | XC3S200A XC3S400A | FT256 Ball | Type |
|---|---|---|---|---|
| 2 | IO_L20P_2/D1 | IO_L18N_2/D1 | R13 | DUAL |
| 2 | IO_L18P_2/D2 | IO_L18P_2/D2 | T13 | DUAL |
| 2 | N.C. (◆) | IO_L19N_2 | P13 | I/O |
| 2 | N.C. (◆) | IO_L19P_2 | N12 | I/O |
| 2 | IO_L20N_2/ CCLK | IO_L20N_2/ CCLK | R14 | DUAL |
| 2 | IO_L18N_2/D0/ DIN/MISO | IO_L20P_2/D0/ DIN/MISO | T14 | DUAL |
| 2 | IP_2 | IP_2 | L7 | INPUT |
| 2 | IP_2 | IP_2 | L8 | INPUT |
| 2 | IP_2/VREF_2 | IP_2/VREF_2 | L9 | VREF |
| 2 | IP_2/VREF_2 | IP_2/VREF_2 | L10 | VREF |
| 2 | IP_2/VREF_2 | IP_2/VREF_2 | M7 | VREF |
| 2 | IP_2/VREF_2 | IP_2/VREF_2 | M8 | VREF |
| 2 | IP_2/VREF_2 | IP_2/VREF_2 | M11 | VREF |
| 2 | IP_2/VREF_2 | IP_2/VREF_2 | N5 | VREF |
| 2 | VCCO_2 | VCCO_2 | M9 | VCCO |
| 2 | VCCO_2 | VCCO_2 | R4 | VCCO |
| 2 | VCCO_2 | VCCO_2 | R8 | VCCO |
| 2 | VCCO_2 | VCCO_2 | R12 | VCCO |
| 3 | IO_L01N_3 | IO_L01N_3 | C1 | I/O |
| 3 | IO_L01P_3 | IO_L01P_3 | C2 | I/O |
| 3 | IO_L02N_3 | IO_L02N_3 | D3 | I/O |
| 3 | IO_L02P_3 | IO_L02P_3 | D4 | I/O |
| 3 | IO_L03N_3 | IO_L03N_3 | E1 | I/O |
| 3 | IO_L03P_3 | IO_L03P_3 | D1 | I/O |
| 3 | N.C. (◆) | IO_L05N_3 | E2 | I/O |
| 3 | N.C. (◆) | IO_L05P_3 | E3 | I/O |
| 3 | N.C. (◆) | IO_L07N_3 | G4 | I/O |
| 3 | N.C. (◆) | IO_L07P_3 | F3 | I/O |
| 3 | IO_L08N_3/ VREF_3 | IO_L08N_3/ VREF_3 | G1 | VREF |
| 3 | IO_L08P_3 | IO_L08P_3 | F1 | I/O |
| 3 | N.C. (◆) | IO_L09N_3 | H4 | I/O |
| 3 | N.C. (◆) | IO_L09P_3 | G3 | I/O |
| 3 | N.C. (◆) | IO_L10N_3 | H5 | I/O |
| 3 | N.C. (◆) | IO_L10P_3 | H6 | I/O |
| 3 | IO_L11N_3/ LHCLK1 | IO_L11N_3/ LHCLK1 | H1 | LHCLK |
| 3 | IO_L11P_3/ LHCLK0 | IO_L11P_3/ LHCLK0 | G2 | LHCLK |
| 3 | IO_L12N_3/ IRDY2/LHCLK3 | IO_L12N_3/ IRDY2/LHCLK3 | J3 | LHCLK |
| 3 | IO_L12P_3/ LHCLK2 | IO_L12P_3/ LHCLK2 | H3 | LHCLK |

*Table 67:* **Spartan-3A FT256 Pinout (XC3S50A, XC3S200A, XC3S400) *(Continued)***

| Bank | XC3S50A | XC3S200A XC3S400A | FT256 Ball | Type |
|---|---|---|---|---|
| 3 | IO_L14N_3/ LHCLK5 | IO_L14N_3/ LHCLK5 | J1 | LHCLK |
| 3 | IO_L14P_3/ LHCLK4 | IO_L14P_3/ LHCLK4 | J2 | LHCLK |
| 3 | IO_L15N_3/ LHCLK7 | IO_L15N_3/ LHCLK7 | K1 | LHCLK |
| 3 | IO_L15P_3/ TRDY2/LHCLK6 | IO_L15P_3/ TRDY2/LHCLK6 | K3 | LHCLK |
| 3 | N.C. (◆) | IO_L16N_3 | L2 | I/O |
| 3 | N.C. (◆) | IO_L16P_3/ VREF_3 | L1 | VREF |
| 3 | N.C. (◆) | IO_L17N_3 | J6 | I/O |
| 3 | N.C. (◆) | IO_L17P_3 | J4 | I/O |
| 3 | N.C. (◆) | IO_L18N_3 | L3 | I/O |
| 3 | N.C. (◆) | IO_L18P_3 | K4 | I/O |
| 3 | N.C. (◆) | IO_L19N_3 | L4 | I/O |
| 3 | N.C. (◆) | IO_L19P_3 | M3 | I/O |
| 3 | IO_L20N_3 | IO_L20N_3 | N1 | I/O |
| 3 | IO_L20P_3 | IO_L20P_3 | M1 | I/O |
| 3 | IO_L22N_3 | IO_L22N_3 | P1 | I/O |
| 3 | IO_L22P_3 | IO_L22P_3 | N2 | I/O |
| 3 | IO_L23N_3 | IO_L23N_3 | P2 | I/O |
| 3 | IO_L23P_3 | IO_L23P_3 | R1 | I/O |
| 3 | IO_L24N_3 | IO_L24N_3 | M4 | I/O |
| 3 | IO_L24P_3 | IO_L24P_3 | N3 | I/O |
| 3 | IP_L04N_3/ VREF_3 | IP_L04N_3/ VREF_3 | F4 | VREF |
| 3 | IP_L04P_3 | IP_L04P_3 | E4 | INPUT |
| 3 | N.C. (◆) | IP_L06N_3/ VREF_3 | G5 | VREF |
| 3 | N.C. (◆) | IP_L06P_3 | G6 | INPUT |
| 3 | IP_L13N_3 | IP_L13N_3 | J7 | INPUT |
| 3 | IP_L13P_3 | IP_L13P_3 | H7 | INPUT |
| 3 | IP_L21N_3 | IP_L21N_3 | K6 | INPUT |
| 3 | IP_L21P_3 | IP_L21P_3 | K5 | INPUT |
| 3 | IP_L25N_3/ VREF_3 | IP_L25N_3/ VREF_3 | L6 | VREF |
| 3 | IP_L25P_3 | IP_L25P_3 | L5 | INPUT |
| 3 | VCCO_3 | VCCO_3 | D2 | VCCO |
| 3 | VCCO_3 | VCCO_3 | H2 | VCCO |
| 3 | VCCO_3 | VCCO_3 | J5 | VCCO |
| 3 | VCCO_3 | VCCO_3 | M2 | VCCO |
| GND | GND | GND | A1 | GND |
| GND | GND | GND | A16 | GND |
| GND | GND | GND | B7 | GND |

*Table 67:* **Spartan-3A FT256 Pinout (XC3S50A, XC3S200A, XC3S400) *(Continued)***

| Bank | XC3S50A | XC3S200A XC3S400A | FT256 Ball | Type |
|---|---|---|---|---|
| GND | GND | GND | B11 | GND |
| GND | GND | GND | C3 | GND |
| GND | GND | GND | C14 | GND |
| GND | GND | GND | E5 | GND |
| GND | GND | GND | E12 | GND |
| GND | GND | GND | F2 | GND |
| GND | GND | GND | F6 | GND |
| GND | GND | GND | G8 | GND |
| GND | GND | GND | G10 | GND |
| GND | GND | GND | G15 | GND |
| GND | GND | GND | H9 | GND |
| GND | GND | GND | J8 | GND |
| GND | GND | GND | K2 | GND |
| GND | GND | GND | K7 | GND |
| GND | GND | GND | K9 | GND |
| GND | GND | GND | L11 | GND |
| GND | GND | GND | L15 | GND |
| GND | GND | GND | M5 | GND |
| GND | GND | GND | M12 | GND |
| GND | GND | GND | P3 | GND |
| GND | GND | GND | P14 | GND |
| GND | GND | GND | R6 | GND |
| GND | GND | GND | R10 | GND |
| GND | GND | GND | T1 | GND |
| GND | GND | GND | T16 | GND |
| VCCAUX | SUSPEND | SUSPEND | R16 | PWR MGMT |
| VCCAUX | DONE | DONE | T15 | CONFIG |
| VCCAUX | PROG_B | PROG_B | A2 | CONFIG |
| VCCAUX | TCK | TCK | A15 | JTAG |
| VCCAUX | TDI | TDI | B1 | JTAG |
| VCCAUX | TDO | TDO | B16 | JTAG |
| VCCAUX | TMS | TMS | B2 | JTAG |
| VCCAUX | VCCAUX | VCCAUX | E11 | VCCAUX |
| VCCAUX | VCCAUX | VCCAUX | F5 | VCCAUX |
| VCCAUX | VCCAUX | VCCAUX | L12 | VCCAUX |
| VCCAUX | VCCAUX | VCCAUX | M6 | VCCAUX |
| VCCINT | VCCINT | VCCINT | G7 | VCCINT |
| VCCINT | VCCINT | VCCINT | G9 | VCCINT |
| VCCINT | VCCINT | VCCINT | H8 | VCCINT |
| VCCINT | VCCINT | VCCINT | J9 | VCCINT |

*Table 67:* **Spartan-3A FT256 Pinout (XC3S50A, XC3S200A, XC3S400) *(Continued)***

| Bank | XC3S50A | XC3S200A XC3S400A | FT256 Ball | Type |
|---|---|---|---|---|
| VCCINT | VCCINT | VCCINT | K8 | VCCINT |
| VCCINT | VCCINT | VCCINT | K10 | VCCINT |

*Table 68:* **Spartan-3A FT256 Pinout (XC3S700A, XC3S1400A)**

| Bank | XC3S700A XC3S1400A | FT256 Ball | Type |
|---|---|---|---|
| 0 | IO_L01N_0 | C13 | I/O |
| 0 | IO_L01P_0 | D13 | I/O |
| 0 | IO_L02N_0 | B14 | I/O |
| 0 | IO_L02P_0/VREF_0 | B15 | VREF |
| 0 | IO_L03N_0 | D12 | I/O |
| 0 | IO_L03P_0 | C12 | I/O |
| 0 | IO_L04N_0 | A13 | I/O |
| 0 | IO_L04P_0 | A14 | I/O |
| 0 | IO_L05N_0 | A12 | I/O |
| 0 | IO_L05P_0 | B12 | I/O |
| 0 | IO_L06N_0/VREF_0 | D10 | VREF |
| 0 | IO_L06P_0 | D11 | I/O |
| 0 | IO_L07N_0 | A11 | I/O |
| 0 | IO_L07P_0 | C11 | I/O |
| 0 | IO_L08N_0 | A10 | I/O |
| 0 | IO_L08P_0 | B10 | I/O |
| 0 | IO_L09N_0/GCLK5 | D9 | GCLK |
| 0 | IO_L09P_0/GCLK4 | C10 | GCLK |
| 0 | IO_L10N_0/GCLK7 | A9 | GCLK |
| 0 | IO_L10P_0/GCLK6 | C9 | GCLK |
| 0 | IO_L11N_0/GCLK9 | D8 | GCLK |
| 0 | IO_L11P_0/GCLK8 | C8 | GCLK |
| 0 | IO_L12N_0/GCLK11 | B8 | GCLK |
| 0 | IO_L12P_0/GCLK10 | A8 | GCLK |
| 0 | IO_L13N_0 | C7 | I/O |
| 0 | IO_L13P_0 | A7 | I/O |
| 0 | IO_L14N_0/VREF_0 | E7 | VREF |
| 0 | IO_L14P_0 | E9 | I/O |
| 0 | IO_L15N_0 | B6 | I/O |
| 0 | IO_L15P_0 | A6 | I/O |
| 0 | IO_L16N_0 | C6 | I/O |
| 0 | IO_L16P_0 | D7 | I/O |
| 0 | IO_L17N_0 | C5 | I/O |
| 0 | IO_L17P_0 | A5 | I/O |

*Table 68:* **Spartan-3A FT256 Pinout (XC3S700A,**

| Bank | XC3S700A XC3S1400A | FT256 Ball | Type |
|---|---|---|---|
| 0 | IO_L18N_0 | B4 | I/O |
| 0 | IO_L18P_0 | A4 | I/O |
| 0 | IO_L19N_0 | B3 | I/O |
| 0 | IO_L19P_0 | A3 | I/O |
| 0 | IO_L20N_0/PUDC_B | D5 | DUAL |
| 0 | IO_L20P_0/VREF_0 | C4 | VREF |
| 0 | IP_0 | E6 | INPUT |
| 0 | VCCO_0 | B13 | VCCO |
| 0 | VCCO_0 | B5 | VCCO |
| 0 | VCCO_0 | B9 | VCCO |
| 0 | VCCO_0 | E8 | VCCO |
| 1 | IO_L01N_1/LDC2 | N14 | DUAL |
| 1 | IO_L01P_1/HDC | N13 | DUAL |
| 1 | IO_L02N_1/LDC0 | P15 | DUAL |
| 1 | IO_L02P_1/LDC1 | R15 | DUAL |
| 1 | IO_L03N_1/A1 | N16 | DUAL |
| 1 | IO_L03P_1/A0 | P16 | DUAL |
| 1 | IO_L06N_1/A3 | K13 | DUAL |
| 1 | IO_L06P_1/A2 | L13 | DUAL |
| 1 | IO_L07N_1/A5 | M16 | DUAL |
| 1 | IO_L07P_1/A4 | M15 | DUAL |
| 1 | IO_L08N_1/A7 | L16 | DUAL |
| 1 | IO_L08P_1/A6 | L14 | DUAL |
| 1 | IO_L10N_1/A9 | J13 | DUAL |
| 1 | IO_L10P_1/A8 | J12 | DUAL |
| 1 | IO_L11N_1/RHCLK1 | K14 | RHCLK |
| 1 | IO_L11P_1/RHCLK0 | K15 | RHCLK |
| 1 | IO_L12N_1/TRDY1/RHCLK3 | J16 | RHCLK |
| 1 | IO_L12P_1/RHCLK2 | K16 | RHCLK |
| 1 | IO_L15N_1/RHCLK7 | H16 | RHCLK |
| 1 | IO_L15P_1/IRDY1/RHCLK6 | H15 | RHCLK |
| 1 | IO_L16N_1/A11 | F16 | DUAL |
| 1 | IO_L16P_1/A10 | G16 | DUAL |
| 1 | IO_L17N_1/A13 | G14 | DUAL |
| 1 | IO_L17P_1/A12 | H13 | DUAL |
| 1 | IO_L18N_1/A15 | F15 | DUAL |
| 1 | IO_L18P_1/A14 | E16 | DUAL |
| 1 | IO_L19N_1/A17 | F14 | DUAL |
| 1 | IO_L19P_1/A16 | G13 | DUAL |
| 1 | IO_L20N_1/A19 | F13 | DUAL |

*Table 68:* **Spartan-3A FT256 Pinout (XC3S700A,**

| Bank | XC3S700A XC3S1400A | FT256 Ball | Type |
|---|---|---|---|
| 1 | IO_L20P_1/A18 | E14 | DUAL |
| 1 | IO_L22N_1/A21 | D15 | DUAL |
| 1 | IO_L22P_1/A20 | D16 | DUAL |
| 1 | IO_L23N_1/A23 | D14 | DUAL |
| 1 | IO_L23P_1/A22 | E13 | DUAL |
| 1 | IO_L24N_1/A25 | C15 | DUAL |
| 1 | IO_L24P_1/A24 | C16 | DUAL |
| 1 | IP_1/VREF_1 | H12 | VREF |
| 1 | IP_1/VREF_1 | J14 | VREF |
| 1 | IP_1/VREF_1 | M13 | VREF |
| 1 | IP_1/VREF_1 | M14 | VREF |
| 1 | VCCO_1 | E15 | VCCO |
| 1 | VCCO_1 | J15 | VCCO |
| 1 | VCCO_1 | N15 | VCCO |
| 2 | IO_L01N_2/M0 | P4 | DUAL |
| 2 | IO_L01P_2/M1 | N4 | DUAL |
| 2 | IO_L02N_2/CSO_B | T2 | DUAL |
| 2 | IO_L02P_2/M2 | R2 | DUAL |
| 2 | IO_L03N_2/VS2 | T3 | DUAL |
| 2 | IO_L03P_2/RDWR_B | R3 | DUAL |
| 2 | IO_L04N_2/VS0 | P5 | DUAL |
| 2 | IO_L04P_2/VS1 | N6 | DUAL |
| 2 | IO_L05N_2 | R5 | I/O |
| 2 | IO_L05P_2 | T4 | I/O |
| 2 | IO_L06N_2/D6 | T6 | DUAL |
| 2 | IO_L06P_2/D7 | T5 | DUAL |
| 2 | IO_L08N_2/D4 | N8 | DUAL |
| 2 | IO_L08P_2/D5 | P7 | DUAL |
| 2 | IO_L09N_2/GCLK13 | T7 | GCLK |
| 2 | IO_L09P_2/GCLK12 | R7 | GCLK |
| 2 | IO_L10N_2/GCLK15 | T8 | GCLK |
| 2 | IO_L10P_2/GCLK14 | P8 | GCLK |
| 2 | IO_L11N_2/GCLK1 | P9 | GCLK |
| 2 | IO_L11P_2/GCLK0 | N9 | GCLK |
| 2 | IO_L12N_2/GCLK3 | T9 | GCLK |
| 2 | IO_L12P_2/GCLK2 | R9 | GCLK |
| 2 | IO_L14N_2/MOSI/CSI_B | P10 | DUAL |
| 2 | IO_L14P_2 | T10 | I/O |
| 2 | IO_L15N_2/DOUT | R11 | DUAL |
| 2 | IO_L15P_2/AWAKE | T11 | PWRMGT |

*Table 68:* **Spartan-3A FT256 Pinout (XC3S700A,**

| Bank | XC3S700A XC3S1400A | FT256 Ball | Type |
|---|---|---|---|
| 2 | IO_L16N_2 | N11 | I/O |
| 2 | IO_L16P_2 | P11 | I/O |
| 2 | IO_L17N_2/D3 | P12 | DUAL |
| 2 | IO_L17P_2/INIT_B | T12 | DUAL |
| 2 | IO_L18N_2/D1 | R13 | DUAL |
| 2 | IO_L18P_2/D2 | T13 | DUAL |
| 2 | IO_L19N_2 | P13 | I/O |
| 2 | IO_L19P_2 | N12 | I/O |
| 2 | IO_L20N_2/CCLK | R14 | DUAL |
| 2 | IO_L20P_2/D0/DIN/MISO | T14 | DUAL |
| 2 | IP_2/VREF_2 | M11 | VREF |
| 2 | IP_2/VREF_2 | M7 | VREF |
| 2 | IP_2/VREF_2 | M9 | VREF |
| 2 | IP_2/VREF_2 | N5 | VREF |
| 2 | IP_2/VREF_2 | P6 | VREF |
| 2 | VCCO_2 | R12 | VCCO |
| 2 | VCCO_2 | R4 | VCCO |
| 2 | VCCO_2 | R8 | VCCO |
| 3 | IO_L01N_3 | C1 | I/O |
| 3 | IO_L01P_3 | C2 | I/O |
| 3 | IO_L02N_3 | D3 | I/O |
| 3 | IO_L02P_3 | D4 | I/O |
| 3 | IO_L03N_3 | E1 | I/O |
| 3 | IO_L03P_3 | D1 | I/O |
| 3 | IO_L04N_3 | F4 | I/O |
| 3 | IO_L04P_3 | E4 | I/O |
| 3 | IO_L05N_3 | E2 | I/O |
| 3 | IO_L05P_3 | E3 | I/O |
| 3 | IO_L07N_3 | G3 | I/O |
| 3 | IO_L07P_3 | F3 | I/O |
| 3 | IO_L08N_3/VREF_3 | G1 | VREF |
| 3 | IO_L08P_3 | F1 | I/O |
| 3 | IO_L11N_3/LHCLK1 | H1 | LHCLK |
| 3 | IO_L11P_3/LHCLK0 | G2 | LHCLK |
| 3 | IO_L12N_3/IRDY2/LHCLK3 | J3 | LHCLK |
| 3 | IO_L12P_3/LHCLK2 | H3 | LHCLK |
| 3 | IO_L14N_3/LHCLK5 | J1 | LHCLK |
| 3 | IO_L14P_3/LHCLK4 | J2 | LHCLK |
| 3 | IO_L15N_3/LHCLK7 | K1 | LHCLK |
| 3 | IO_L15P_3/TRDY2/LHCLK6 | K3 | LHCLK |

*Table 68:* **Spartan-3A FT256 Pinout (XC3S700A,**

| Bank | XC3S700A XC3S1400A | FT256 Ball | Type |
|---|---|---|---|
| 3 | IO_L16N_3 | L2 | I/O |
| 3 | IO_L16P_3/VREF_3 | L1 | VREF |
| 3 | IO_L18N_3 | L3 | I/O |
| 3 | IO_L18P_3 | K4 | I/O |
| 3 | IO_L19N_3 | L4 | I/O |
| 3 | IO_L19P_3 | M3 | I/O |
| 3 | IO_L20N_3 | N1 | I/O |
| 3 | IO_L20P_3 | M1 | I/O |
| 3 | IO_L22N_3 | P1 | I/O |
| 3 | IO_L22P_3/VREF_3 | N2 | VREF |
| 3 | IO_L23N_3 | P2 | I/O |
| 3 | IO_L23P_3 | R1 | I/O |
| 3 | IO_L24N_3 | M4 | I/O |
| 3 | IO_L24P_3 | N3 | I/O |
| 3 | IP_3 | J4 | INPUT |
| 3 | IP_3/VREF_3 | G4 | VREF |
| 3 | IP_3/VREF_3 | J5 | VREF |
| 3 | VCCO_3 | D2 | VCCO |
| 3 | VCCO_3 | H2 | VCCO |
| 3 | VCCO_3 | M2 | VCCO |
| GND | GND | A1 | GND |
| GND | GND | A16 | GND |
| GND | GND | B11 | GND |
| GND | GND | B7 | GND |
| GND | GND | C14 | GND |
| GND | GND | C3 | GND |
| GND | GND | E10 | GND |
| GND | GND | E12 | GND |
| GND | GND | E5 | GND |
| GND | GND | F11 | GND |
| GND | GND | F2 | GND |
| GND | GND | F6 | GND |
| GND | GND | F7 | GND |
| GND | GND | F8 | GND |
| GND | GND | F9 | GND |
| GND | GND | G10 | GND |
| GND | GND | G12 | GND |
| GND | GND | G15 | GND |
| GND | GND | G5 | GND |
| GND | GND | G6 | GND |

*Table 68:* **Spartan-3A FT256 Pinout (XC3S700A,**

| Bank | XC3S700A XC3S1400A | FT256 Ball | Type |
|---|---|---|---|
| GND | GND | G8 | GND |
| GND | GND | H11 | GND |
| GND | GND | H5 | GND |
| GND | GND | H7 | GND |
| GND | GND | H9 | GND |
| GND | GND | J10 | GND |
| GND | GND | J6 | GND |
| GND | GND | J8 | GND |
| GND | GND | K11 | GND |
| GND | GND | K12 | GND |
| GND | GND | K2 | GND |
| GND | GND | K5 | GND |
| GND | GND | K7 | GND |
| GND | GND | K9 | GND |
| GND | GND | L10 | GND |
| GND | GND | L11 | GND |
| GND | GND | L15 | GND |
| GND | GND | L6 | GND |
| GND | GND | L8 | GND |
| GND | GND | M12 | GND |
| GND | GND | M5 | GND |
| GND | GND | M8 | GND |
| GND | GND | N10 | GND |
| GND | GND | N7 | GND |
| GND | GND | P14 | GND |
| GND | GND | P3 | GND |
| GND | GND | R10 | GND |
| GND | GND | R6 | GND |
| GND | GND | T1 | GND |
| GND | GND | T16 | GND |
| VCCAUX | SUSPEND | R16 | PWRMGT |
| VCCAUX | DONE | T15 | CONFIG |
| VCCAUX | PROG_B | A2 | CONFIG |
| VCCAUX | TCK | A15 | JTAG |
| VCCAUX | TDI | B1 | JTAG |
| VCCAUX | TDO | B16 | JTAG |
| VCCAUX | TMS | B2 | JTAG |
| VCCAUX | VCCAUX | D6 | VCCAUX |
| VCCAUX | VCCAUX | E11 | VCCAUX |
| VCCAUX | VCCAUX | F12 | VCCAUX |

*Table 68:* **Spartan-3A FT256 Pinout (XC3S700A,**

| Bank | XC3S700A XC3S1400A | FT256 Ball | Type |
|---|---|---|---|
| VCCAUX | VCCAUX | F5 | VCCAUX |
| VCCAUX | VCCAUX | H14 | VCCAUX |
| VCCAUX | VCCAUX | H4 | VCCAUX |
| VCCAUX | VCCAUX | L12 | VCCAUX |
| VCCAUX | VCCAUX | L5 | VCCAUX |
| VCCAUX | VCCAUX | M10 | VCCAUX |
| VCCAUX | VCCAUX | M6 | VCCAUX |
| VCCINT | VCCINT | F10 | VCCINT |
| VCCINT | VCCINT | G11 | VCCINT |
| VCCINT | VCCINT | G7 | VCCINT |
| VCCINT | VCCINT | G9 | VCCINT |
| VCCINT | VCCINT | H10 | VCCINT |
| VCCINT | VCCINT | H6 | VCCINT |
| VCCINT | VCCINT | H8 | VCCINT |
| VCCINT | VCCINT | J11 | VCCINT |
| VCCINT | VCCINT | J7 | VCCINT |
| VCCINT | VCCINT | J9 | VCCINT |
| VCCINT | VCCINT | K10 | VCCINT |
| VCCINT | VCCINT | K6 | VCCINT |
| VCCINT | VCCINT | K8 | VCCINT |
| VCCINT | VCCINT | L7 | VCCINT |
| VCCINT | VCCINT | L9 | VCCINT |

## User I/Os by Bank

Table 69, Table 70, and Table 71 indicate how the available user-I/O pins are distributed between the four I/O banks on the FT256 package. The AWAKE pin is counted as a dual-purpose I/O.

The XC3S50A FPGA in the FT256 package has 51 unconnected balls, labeled with an “N.C.” type. These pins are also indicated in Figure 20.

*Table 69:* **User I/Os Per Bank on XC3S50A in the FT256 Package**

| Package Edge | I/O Bank | Maximum I/O | All Possible I/O Pins by Type | | | | |
|---|---|---|---|---|---|---|---|
| | | | I/O | INPUT | DUAL | VREF | CLK |
| Top | 0 | 40 | 21 | 7 | 1 | 3 | 8 |
| Right | 1 | 32 | 12 | 5 | 4 | 3 | 8 |
| Bottom | 2 | 40 | 5 | 2 | 21 | 6 | 6 |
| Left | 3 | 32 | 15 | 6 | 0 | 3 | 8 |
| **TOTAL** | | **144** | **53** | **20** | **26** | **15** | **30** |

*Table 70:* **User I/Os Per Bank on XC3S200A and XC3S400A in the FT256 Package**

| Package Edge | I/O Bank | Maximum I/O | All Possible I/O Pins by Type | | | | |
|---|---|---|---|---|---|---|---|
| | | | I/O | INPUT | DUAL | VREF | CLK |
| Top | 0 | 47 | 27 | 6 | 1 | 5 | 8 |
| Right | 1 | 50 | 1 | 6 | 30 | 5 | 8 |
| Bottom | 2 | 48 | 11 | 2 | 21 | 6 | 8 |
| Left | 3 | 50 | 30 | 7 | 0 | 5 | 8 |
| **TOTAL** | | **195** | **69** | **21** | **52** | **21** | **32** |

*Table 71:* **User I/Os Per Bank on XC3S700A and XC3S1400A in the FT256 Package**

| Package Edge | I/O Bank | Maximum I/O | All Possible I/O Pins by Type | | | | |
|---|---|---|---|---|---|---|---|
| | | | I/O | INPUT | DUAL | VREF | CLK |
| Top | 0 | 41 | 27 | 1 | 1 | 4 | 8 |
| Right | 1 | 40 | 0 | 0 | 30 | 4 | 6 |
| Bottom | 2 | 41 | 7 | 0 | 21 | 5 | 8 |
| Left | 3 | 39 | 25 | 1 | 0 | 5 | 8 |
| **TOTAL** | | **161** | **59** | **2** | **52** | **18** | **30** |

## Footprint Migration Differences

### Unconnected Balls on XC3S50A

Table 72 summarizes any footprint and functionality differences between the XC3S50A and the XC3S200A or XC3S400A FPGAs that might affect easy migration between these devices in the FT256 package. The XC3S200A and XC3S400A have identical pinouts. The XC3S50A pinout is compatible, but there are 52 balls that are different. Generally, designs easily migrate upward from the XC3S50A to either the XC3S200A or XC3S400A. If using differential I/O, see Table 73. If using the BPI configuration mode (parallel Flash), see Table 74.

*Table 72:* **FT256 XC3S50A Footprint Migration Difference**

| FT256 Ball | Bank | XC3S50A Type | Migration | XC3S200A/ XC3S400A Type |
|---|---|---|---|---|
| A7 | 0 | N.C. | → | I/O |
| A12 | 0 | N.C. | → | I/O |
| B12 | 0 | INPUT | → | I/O |
| C7 | 0 | N.C. | → | I/O |
| D10 | 0 | N.C. | → | I/O |
| E2 | 3 | N.C. | → | I/O |
| E3 | 3 | N.C. | → | I/O |
| E7 | 0 | N.C. | → | I/O |
| E10 | 0 | N.C. | → | I/O |
| E16 | 1 | N.C. | → | I/O |
| F3 | 3 | N.C. | → | I/O |
| F8 | 0 | N.C. | → | I/O |
| F14 | 1 | N.C. | → | I/O |
| F15 | 1 | N.C. | → | I/O |
| F16 | 1 | N.C. | → | I/O |
| G3 | 3 | N.C. | → | I/O |
| G4 | 3 | N.C. | → | I/O |
| G5 | 3 | N.C. | → | INPUT |
| G6 | 3 | N.C. | → | INPUT |
| G13 | 1 | N.C. | → | I/O |
| G14 | 1 | N.C. | → | I/O |
| G16 | 1 | N.C. | → | I/O |
| H4 | 3 | N.C. | → | I/O |
| H5 | 3 | N.C. | → | I/O |
| H6 | 3 | N.C. | → | I/O |
| H13 | 1 | N.C. | → | I/O |
| J4 | 3 | N.C. | → | I/O |
| J6 | 3 | N.C. | → | I/O |
| J10 | 1 | N.C. | → | INPUT |
| J11 | 1 | N.C. | → | INPUT |
| K4 | 3 | N.C. | → | I/O |
| K13 | 1 | N.C. | → | I/O |
| L1 | 3 | N.C. | → | I/O |
| L2 | 3 | N.C. | → | I/O |
| L3 | 3 | N.C. | → | I/O |
| L4 | 3 | N.C. | → | I/O |
| L13 | 1 | N.C. | → | I/O |
| L14 | 1 | N.C. | → | I/O |
| L16 | 1 | N.C. | → | I/O |
| M3 | 3 | N.C. | → | I/O |
| M10 | 2 | N.C. | → | I/O |
| M13 | 1 | N.C. | → | I/O |
| M14 | 1 | N.C. | → | I/O |
| M15 | 1 | N.C. | → | I/O |
| M16 | 1 | N.C. | → | I/O |
| N7 | 2 | N.C. | → | I/O |
| N10 | 2 | N.C. | → | I/O |
| N12 | 2 | N.C. | → | I/O |
| P6 | 2 | N.C. | → | I/O |
| P13 | 2 | N.C. | → | I/O |
| R7 | 2 | N.C. | → | I/O |
| T7 | 2 | N.C. | → | I/O |
| **DIFFERENCES** | | | **52** | |

Legend:

→ This pin can unconditionally migrate from the device on the left to the device on the right. Migration in the other direction is possible depending on how the pin is configured for the device on the right.

## XC3S50A Differential I/O Alignment Differences

Also, some differential I/O pairs on the XC3S50A FPGA are aligned differently than the corresponding pairs on the XC3S200A or XC3S400A FPGAs, as shown in Table 73. All the mismatched pairs are in I/O Bank 2. The shading highlights the N side of each pair.

*Table 73:* **Differential I/O Differences in FT256**

| FT256 Ball | Bank | XC3S50A | XC3S200A XC3S400A |
|---|---|---|---|
| T3 | 2 | IO_L04P_2/VS2 | IO_L03N_2/VS2 |
| N6 | | IO_L03N_2/VS1 | IO_L04P_2/VS1 |
| R5 | | IO_L06P_2 | IO_L05N_2 |
| T5 | | IO_L05N_2/D7 | IO_L06P_2/D7 |
| P10 | | IO_L14P_2/MOSI /CSI_B | IO_L14N_2/MOSI /CSI_B |
| T10 | | IO_L14N_2 | IO_L14P_2 |
| R13 | | IO_L20P_2 | IO_L18N_2 |
| T14 | | IO_L18N_2 | IO_L20P_2 |

## XC3S50A Does Not Have BPI Mode Address Outputs

The XC3S50A FPGA does not generate the BPI-mode address pins during configuration. Table 74 summarizes these differences.

*Table 74:* **XC3S50A BPI Functional Differences**

| FT256 Ball | Bank | XC3S50A | XC3S200A XC3S400A |
|---|---|---|---|
| N16 | 1 | IO_L03N_1 | IO_L03N_1/A1 |
| P16 | | IO_L03P_1 | IO_L03P_1/A0 |
| J13 | | IO_L10N_1 | IO_L10N_1/A9 |
| J12 | | IO_L10P_1 | IO_L10P_1/A8 |
| F13 | | IO_L20N_1 | IO_L20N_1/A19 |
| E14 | | IO_L20P_1 | IO_L20P_1/A18 |
| D15 | | IO_L22N_1 | IO_L22N_1/A21 |
| D16 | | IO_L22P_1 | IO_L22P_1/A20 |
| D14 | | IO_L23N_1 | IO_L23N_1/A23 |
| E13 | | IO_L23P_1 | IO_L23P_1/A22 |
| C15 | | IO_L24N_1 | IO_L24N_1/A25 |
| C16 | | IO_L24P_1 | IO_L24P_1/A24 |

## Differences Between XC3S200A/XC3S400A and XC3S700A/XC3S1400A

The XC3S700A and XC3S1400A FPGAs have several additional power and ground pins as compared to the XC3S200A and XC3S400A. Table 75 summarizes all the differences. All dedicated and dual-purpose configuration pins are in the same location.

*Table 75:* **Differences Between XC3S200A/XC3S400A and XC3S700A/XC3S1400A**

| FT256 Ball | Bank | XC3S200A XC3S400A | | XC3S700A XC3S1400A | |
|---|---|---|---|---|---|
| | | Pin Name | Type | Pin Name | Type |
| F8 | 0 | IO_L14P_0 | I/O | GND | GND |
| D11 | 0 | IO_L03N_0 | I/O | IO_L06P_0 | I/O |
| D10 | 0 | IO_L06P_0 | I/O | IO_L06N_0/ VREF_0 | VREF |
| F7 | 0 | IP_0 | INPUT | GND | GND |
| F9 | 0 | IP_0 | INPUT | GND | GND |
| D12 | 0 | IP_0 | INPUT | IO_L03N_0 | I/O |
| E9 | 0 | IP_0/ VREF_0 | INPUT | IO_L14P_0 | I/O |
| D6 | 0 | IP_0 | INPUT | VCCAUX | VCCAUX |
| F10 | 0 | IP_0 | INPUT | VCCINT | VCCINT |
| E10 | 0 | IO_L06N_0/ VREF_0 | VREF | GND | GND |
| M13 | 1 | IO_L05P_1 | I/O | IP_1/ VREF_1 | VREF |
| F11 | 1 | IP_L25N_1 | INPUT | GND | GND |
| H11 | 1 | IP_L13N_1 | INPUT | GND | GND |
| K11 | 1 | IP_L04P_1 | INPUT | GND | GND |
| G11 | 1 | IP_L21N_1 | INPUT | VCCINT | VCCINT |
| H10 | 1 | IP_L13P_1 | INPUT | VCCINT | VCCINT |
| J11 | 1 | IP_L09N_1 | INPUT | VCCINT | VCCINT |
| H14 | 1 | IO_L14N_1/ RHCLK5 | RHCLK | VCCAUX | VCCAUX |
| J14 | 1 | IO_L14P_1/ RHCLK4 | RHCLK | IP_1/ VREF_1 | VREF |
| H12 | 1 | VCCO_1 | VCCO | IP_1/ VREF_1 | VREF |
| G12 | 1 | IP_L21P_1/ VREF_1 | VREF | GND | GND |
| J10 | 1 | IP_L09P_1/ VREF_1 | VREF | GND | GND |
| K12 | 1 | IP_L04N_1/ VREF_1 | VREF | GND | GND |
| F12 | 1 | IP_L25P_1/ VREF_1 | VREF | VCCAUX | VCCAUX |
| M14 | 1 | IO_L05N_1/ VREF_1 | VREF | IP_1/ VREF_1 | VREF |
| N7 | 2 | IO_L07P_2 | I/O | GND | GND |

*Table 75:* **Differences Between XC3S200A/XC3S400A and XC3S700A/XC3S1400A *(Continued)***

| FT256 Ball | Bank | XC3S200A XC3S400A | | XC3S700A XC3S1400A | |
|---|---|---|---|---|---|
| | | Pin Name | Type | Pin Name | Type |
| N10 | 2 | IO_L13P_2 | I/O | GND | GND |
| M10 | 2 | IO_L13N_2 | I/O | VCCAUX | VCCAUX |
| P6 | 2 | IO_L07N_2 | I/O | IP_2/ VREF_2 | VREF |
| L8 | 2 | IP_2 | INPUT | GND | GND |
| L7 | 2 | IP_2 | INPUT | VCCINT | VCCINT |
| M9 | 2 | VCCO_2 | VCCO | IP_2/ VREF_2 | VREF |
| L10 | 2 | IP_2/ VREF_2 | VREF | GND | GND |
| M8 | 2 | IP_2/ VREF_2 | VREF | GND | GND |
| L9 | 2 | IP_2/ VREF_2 | VREF | VCCINT | VCCINT |
| H5 | 3 | IO_L10N_3 | I/O | GND | GND |
| J6 | 3 | IO_L17N_3 | I/O | GND | GND |
| G3 | 3 | IO_L09P_3 | I/O | IO_L07N_3 | I/O |
| J4 | 3 | IO_L17P_3 | I/O | IP_3 | IP |
| H4 | 3 | IO_L09N_3 | I/O | VCCAUX | VCCAUX |
| H6 | 3 | IO_L10P_3 | I/O | VCCINT | VCCINT |
| N2 | 3 | IO_L22P_3 | I/O | IO_L22P_3/ VREF_3 | VREF |
| G4 | 3 | IO_L07N_3 | I/O | IP_3/ VREF_3 | VREF |
| G6 | 3 | IP_L06P_3 | INPUT | GND | GND |
| H7 | 3 | IP_L13P_3 | INPUT | GND | GND |
| K5 | 3 | IP_L21P_3 | INPUT | GND | GND |
| E4 | 3 | IP_L04P_3 | INPUT | IO_L04P_3 | I/O |
| L5 | 3 | IP_L25P_3 | INPUT | VCCAUX | VCCAUX |
| J7 | 3 | IP_L13N_3 | INPUT | VCCINT | VCCINT |
| K6 | 3 | IP_L21N_3 | INPUT | VCCINT | VCCINT |
| J5 | 3 | VCCO_3 | VCCO | IP_3/ VREF_3 | VREF |
| G5 | 3 | IP_L06N_3/ VREF_3 | VREF | GND | GND |
| L6 | 3 | IP_L25N_3/ VREF_3 | VREF | GND | GND |
| F4 | 3 | IP_L04N_3/ VREF_3 | VREF | IO_L04N_3 | I/O |

## FT256 Footprint (XC3S50A)

(Differential Outputs) Bank 0 (Differential Outputs)

| | 1 | 2 | 3 | 4 | 5 | 6 | 7 | 8 | 9 | 10 | 11 | 12 | 13 | 14 | 15 | 16 |
|---|---|---|---|---|---|---|---|---|---|---|---|---|---|---|---|---|
| A | GND | PROG_B | I/O L19P_0 | I/O L18P_0 | I/O L17P_0 | I/O L15P_0 | N.C. | I/O L12P_0 GCLK10 | I/O L10N_0 GCLK7 | I/O L08N_0 | I/O L07N_0 | N.C. | I/O L04N_0 | I/O L04P_0 | TCK | GND |
| B | TDI | TMS | I/O L19N_0 | I/O L18N_0 | VCCO_0 | I/O L15N_0 | GND | I/O L12N_0 GCLK11 | VCCO_0 | I/O L08P_0 | GND | INPUT | VCCO_0 | I/O L02N_0 | I/O L02P_0 VREF_0 | TDO |
| C | I/O L01N_3 | I/O L01P_3 | GND | I/O L20P_0 VREF_0 | I/O L17N_0 | I/O L16N_0 | N.C. | I/O L11P_0 GCLK8 | I/O L10P_0 GCLK6 | I/O L09P_0 GCLK4 | I/O L07P_0 | I/O L03P_0 | I/O L01N_0 | GND | I/O L24N_1 | I/O L24P_1 |
| D | I/O L03P_3 | VCCO_3 | I/O L02N_3 | I/O L02P_3 | I/O L20N_0 PUDC_B | INPUT | I/O L16P_0 | I/O L11N_0 GCLK9 | I/O L09N_0 GCLK5 | N.C. | I/O L03N_0 | INPUT | I/O L01P_0 | I/O L23N_1 | I/O L22N_1 | I/O L22P_1 |
| E | I/O L03N_3 | N.C. | N.C. | INPUT L04P_3 | GND | INPUT | N.C. | VCCO_0 | INPUT VREF_0 | N.C. | VCCAUX | GND | I/O L23P_1 | I/O L20P_1 | VCCO_1 | N.C. |
| F | I/O L08P_3 | GND | N.C. | INPUT L04N_3 VREF_3 | VCCAUX | GND | INPUT | N.C. | INPUT | INPUT | INPUT L25N_1 | INPUT L25P_1 VREF_1 | I/O L20N_1 | N.C. | N.C. | N.C. |
| G | I/O L08N_3 VREF_3 | I/O L11P_3 LHCLK0 | N.C. | N.C. | N.C. | N.C. | VCCINT | GND | VCCINT | GND | INPUT L21N_1 | INPUT L21P_1 VREF_1 | N.C. | N.C. | GND | N.C. |
| H | I/O L11N_3 LHCLK1 | VCCO_3 | I/O L12P_3 LHCLK2 | N.C. | N.C. | N.C. | INPUT L13P_3 | VCCINT | GND | INPUT L13P_1 | INPUT L13N_1 | VCCO_1 | N.C. | I/O L14N_1 RHCLK5 | I/O L15P_1 IRDY1 RHCLK6 | I/O L15N_1 RHCLK7 |
| J | I/O L14N_3 LHCLK5 | I/O L14P_3 LHCLK4 | I/O L12N_3 IRDY2 LHCLK3 | N.C. | VCCO_3 | N.C. | INPUT L13N_3 | GND | VCCINT | N.C. | N.C. | I/O L10P_1 | I/O L10N_1 | I/O L14P_1 RHCLK4 | VCCO_1 | I/O L12N_1 TRDY1 RHCLK3 |
| K | I/O L15N_3 LHCLK7 | GND | I/O L15P_3 TRDY2 LHCLK6 | N.C. | INPUT L21P_3 | INPUT L21N_3 | GND | VCCINT | GND | VCCINT | INPUT L04P_1 | INPUT L04N_1 VREF_1 | N.C. | I/O L11N_1 RHCLK1 | I/O L11P_1 RHCLK0 | I/O L12P_1 RHCLK2 |
| L | N.C. | N.C. | N.C. | N.C. | INPUT L25P_3 | INPUT L25N_3 VREF_3 | INPUT | INPUT | INPUT VREF_2 | INPUT VREF_2 | GND | VCCAUX | N.C. | N.C. | GND | N.C. |
| M | I/O L20P_3 | VCCO_3 | N.C. | I/O L24N_3 | GND | VCCAUX | INPUT VREF_2 | INPUT VREF_2 | VCCO_2 | N.C. | INPUT VREF_2 | GND | N.C. | N.C. | N.C. | N.C. |
| N | I/O L20N_3 | I/O L22P_3 | I/O L24P_3 | I/O L01P_2 M1 | INPUT VREF_2 | I/O L03N_2 VS1 | N.C. | I/O L08N_2 D4 | I/O L11P_2 GCLK0 | N.C. | I/O L16N_2 | N.C. | I/O L01P_1 HDC | I/O L01N_1 LDC2 | VCCO_1 | I/O L03N_1 |
| P | I/O L22N_3 | I/O L23N_3 | GND | I/O L01N_2 M0 | I/O L04N_2 VS0 | N.C. | I/O L08P_2 D5 | I/O L10P_2 GCLK14 | I/O L11N_2 GCLK1 | I/O L14P_2 MOSI CSI_B | I/O L16P_2 | I/O L17N_2 D3 | N.C. | GND | I/O L02N_1 LDC0 | I/O L03P_1 |
| R | I/O L23P_3 | I/O L02P_2 M2 | I/O L03P_2 RDWR_B | VCCO_2 | I/O L06P_2 | GND | N.C. | VCCO_2 | I/O L12P_2 GCLK2 | GND | I/O L15N_2 DOUT | VCCO_2 | I/O L20P_2 D1 | I/O L20N_2 CCLK | I/O L02P_1 LDC1 | SUSPEND |
| T | GND | I/O L02N_2 CSO_B | I/O L04P_2 VS2 | I/O L05P_2 | I/O L05N_2 D7 | I/O L06N_2 D6 | N.C. | I/O L10N_2 GCLK15 | I/O L12N_2 GCLK3 | I/O L14N_2 | I/O L15P_2 AWAKE | I/O L17P_2 INIT_B | I/O L18P_2 D2 | I/O L18N_2 D0 DIN/MISO | DONE | GND |

(High Output Drive) Bank 3 (High Output Drive) Bank 1 (High Output Drive)

(Differential Outputs) Bank 2 (Differential Outputs)

DS529-4_09_012009

*Figure 20:* **XC3S50A FT256 Package Footprint (Top View)**

| | | | | | | | |
|---|---|---|---|---|---|---|---|
| 53 | **I/O:** Unrestricted, general-purpose user I/O | 25 | **DUAL:** Configuration pins, then possible user I/O | 15 | **VREF:** User I/O or input voltage reference for bank | 2 | **SUSPEND:** Dedicated SUSPEND and dual-purpose AWAKE Power Management pins |
| 20 | **INPUT:** Unrestricted, general-purpose input pin | 30 | **CLK:** User I/O, input, or global buffer input | 16 | **VCCO:** Output voltage supply for bank | | |
| 2 | **CONFIG:** Dedicated configuration pins | 4 | **JTAG:** Dedicated JTAG port pins | 6 | **VCCINT:** Internal core supply voltage (+1.2V) | | |
| 51 | **N.C.:** Not connected (XC3S50A only) | 28 | **GND:** Ground | 4 | **VCCAUX:** Auxiliary supply voltage | | |

## FT256 Footprint (XC3S200A, XC3S400A)

Bank 0

| | 1 | 2 | 3 | 4 | 5 | 6 | 7 | 8 | 9 | 10 | 11 | 12 | 13 | 14 | 15 | 16 |
|---|---|---|---|---|---|---|---|---|---|---|---|---|---|---|---|---|
| A | GND | PROG_B | I/O L19P_0 | I/O L18P_0 | I/O L17P_0 | I/O L15P_0 | I/O L13P_0 | I/O L12P_0 GCLK10 | I/O L10N_0 GCLK7 | I/O L08N_0 | I/O L07N_0 | I/O L05N_0 | I/O L04N_0 | I/O L04P_0 | TCK | GND |
| B | TDI | TMS | I/O L19N_0 | I/O L18N_0 | VCCO_0 | I/O L15N_0 | GND | I/O L12N_0 GCLK11 | VCCO_0 | I/O L08P_0 | GND | I/O L05P_0 | VCCO_0 | I/O L02N_0 | I/O L02P_0 VREF_0 | TDO |
| C | I/O L01N_3 | I/O L01P_3 | GND | I/O L20P_0 VREF_0 | I/O L17N_0 | I/O L16N_0 | I/O L13N_0 | I/O L11P_0 GCLK8 | I/O L10P_0 GCLK6 | I/O L09P_0 GCLK4 | I/O L07P_0 | I/O L03P_0 | I/O L01N_0 | GND | I/O L24N_1 A25 | I/O L24P_1 A24 |
| D | I/O L03P_3 | VCCO_3 | I/O L02N_3 | I/O L02P_3 | I/O L20N_0 PUDC_B | INPUT | I/O L16P_0 | I/O L11N_0 GCLK9 | I/O L09N_0 GCLK5 | I/O L06P_0 | I/O L03N_0 | INPUT | I/O L01P_0 | I/O L23N_1 A23 | I/O L22N_1 A21 | I/O L22P_1 A20 |
| E | I/O L03N_3 | I/O L05N_3 | I/O L05P_3 | INPUT L04P_3 | GND | INPUT | I/O L14N_0 VREF_0 | VCCO_0 | INPUT VREF_0 | I/O L06N_0 VREF_0 | VCCAUX | GND | I/O L23P_1 A22 | I/O L20P_1 A18 | VCCO_1 | I/O L18P_1 A14 |
| F | I/O L08P_3 | GND | I/O L07P_3 | INPUT L04N_3 VREF_3 | VCCAUX | GND | INPUT | I/O L14P_0 | INPUT | INPUT | INPUT L25N_1 | INPUT L25P_1 VREF_1 | I/O L20N_1 A19 | I/O L19N_1 A17 | I/O L18N_1 A15 | I/O L16N_1 A11 |
| G | I/O L08N_3 VREF_3 | I/O L11P_3 LHCLK0 | I/O L09P_3 | I/O L07N_3 | INPUT L06N_3 VREF_3 | INPUT L06P_3 | VCCINT | GND | VCCINT | GND | INPUT L21N_1 | INPUT L21P_1 VREF_1 | I/O L19P_1 A16 | I/O L17N_1 A13 | GND | I/O L16P_1 A10 |
| H | I/O L11N_3 LHCLK1 | VCCO_3 | I/O L12P_3 LHCLK2 | I/O L09N_3 | I/O L10N_3 | I/O L10P_3 | INPUT L13P_3 | VCCINT | GND | INPUT L13P_1 | INPUT L13N_1 | VCCO_1 | I/O L17P_1 A12 | I/O L14N_1 RHCLK5 | I/O L15P_1 IRDY1 RHCLK6 | I/O L15N_1 RHCLK7 |
| J | I/O L14N_3 LHCLK5 | I/O L14P_3 LHCLK4 | I/O L12N_3 IRDY2 LHCLK3 | I/O L17P_3 | VCCO_3 | I/O L17N_3 | INPUT L13N_3 | GND | VCCINT | INPUT L09P_1 VREF_1 | INPUT L09N_1 | I/O L10P_1 A8 | I/O L10N_1 A9 | I/O L14P_1 RHCLK4 | VCCO_1 | I/O L12N_1 TRDY1 RHCLK3 |
| K | I/O L15N_3 LHCLK7 | GND | I/O L15P_3 TRDY2 LHCLK6 | I/O L18P_3 | INPUT L21P_3 | INPUT L21N_3 | GND | VCCINT | GND | VCCINT | INPUT L04P_1 | INPUT L04N_1 VREF_1 | I/O L06N_1 A3 | I/O L11N_1 RHCLK1 | I/O L11P_1 RHCLK0 | I/O L12P_1 RHCLK2 |
| L | I/O L16P_3 VREF_3 | I/O L16N_3 | I/O L18N_3 | I/O L19N_3 | INPUT L25P_3 | INPUT L25N_3 VREF_3 | INPUT | INPUT | INPUT VREF_2 | INPUT VREF_2 | GND | VCCAUX | I/O L06P_1 A2 | I/O L08P_1 A6 | GND | I/O L08N_1 A7 |
| M | I/O L20P_3 | VCCO_3 | I/O L19P_3 | I/O L24N_3 | GND | VCCAUX | INPUT VREF_2 | INPUT VREF_2 | VCCO_2 | I/O L13N_2 | INPUT VREF_2 | GND | I/O L05P_1 | I/O L05N_1 VREF_1 | I/O L07P_1 A4 | I/O L07N_1 A5 |
| N | I/O L20N_3 | I/O L22P_3 | I/O L24P_3 | I/O L01P_2 M1 | INPUT VREF_2 | I/O L04P_2 VS1 | I/O L07P_2 | I/O L08N_2 D4 | I/O L11P_2 GCLK0 | I/O L13P_2 | I/O L16N_2 | I/O L19P_2 | I/O L01P_1 HDC | I/O L01N_1 LDC2 | VCCO_1 | I/O L03N_1 A1 |
| P | I/O L22N_3 | I/O L23N_3 | GND | I/O L01N_2 M0 | I/O L04N_2 VS0 | I/O L07N_2 | I/O L08P_2 D5 | I/O L10P_2 GCLK14 | I/O L11N_2 GCLK1 | I/O L14N_2 MOSI CSI_B | I/O L16P_2 | I/O L17N_2 D3 | I/O L19N_2 | GND | I/O L02N_1 LDC0 | I/O L03P_1 A0 |
| R | I/O L23P_3 | I/O L02P_2 M2 | I/O L03P_2 RDWR_B | VCCO_2 | I/O L05N_2 | GND | I/O L09P_2 GCLK12 | VCCO_2 | I/O L12P_2 GCLK2 | GND | I/O L15N_2 DOUT | VCCO_2 | I/O L18N_2 D1 | I/O L20N_2 CCLK | I/O L02P_1 LDC1 | SUSPEND |
| T | GND | I/O L02N_2 CSO_B | I/O L03N_2 VS2 | I/O L05P_2 | I/O L06P_2 D7 | I/O L06N_2 D6 | I/O L09N_2 GCLK13 | I/O L10N_2 GCLK15 | I/O L12N_2 GCLK3 | I/O L14P_2 | I/O L15P_2 AWAKE | I/O L17P_2 INIT_B | I/O L18P_2 D2 | I/O L20P_2 D0 DIN/MISO | DONE | GND |

Bank 3 | Bank 1

Bank 2

DS529-4_06_012009

*Figure 21:* **XC3S200A and XC3S400A FT256 Package Footprint (Top View)**

| | | | | | | | |
|---|---|---|---|---|---|---|---|
| 69 | **I/O:** Unrestricted, general-purpose user I/O | 51 | **DUAL:** Configuration pins, then possible user I/O | 21 | **VREF:** User I/O or input voltage reference for bank | 2 | **SUSPEND:** Dedicated SUSPEND and dual-purpose AWAKE Power Management pins |
| 21 | **INPUT:** Unrestricted, general-purpose input pin | 32 | **CLK:** User I/O, input, or global buffer input | 16 | **VCCO:** Output voltage supply for bank | | |
| 2 | **CONFIG:** Dedicated configuration pins | 4 | **JTAG:** Dedicated JTAG port pins | 6 | **VCCINT:** Internal core supply voltage (+1.2V) | | |
| 0 | **N.C.:** Not connected | 28 | **GND:** Ground | 4 | **VCCAUX:** Auxiliary supply voltage | | |

## FT256 Footprint (XC3S700A, XC3S1400A)

Bank 0

| | 1 | 2 | 3 | 4 | 5 | 6 | 7 | 8 | 9 | 10 | 11 | 12 | 13 | 14 | 15 | 16 |
|---|---|---|---|---|---|---|---|---|---|---|---|---|---|---|---|---|
| A | GND | PROG_B | I/O L19P_0 | I/O L18P_0 | I/O L17P_0 | I/O L15P_0 | I/O L13P_0 | I/O L12P_0 GCLK10 | I/O L10N_0 GCLK7 | I/O L08N_0 | I/O L07N_0 | I/O L05N_0 | I/O L04N_0 | I/O L04P_0 | TCK | GND |
| B | TDI | TMS | I/O L19N_0 | I/O L18N_0 | VCCO_0 | I/O L15N_0 | GND | I/O L12N_0 GCLK11 | VCCO_0 | I/O L08P_0 | GND | I/O L05P_0 | VCCO_0 | I/O L02N_0 | I/O L02P_0 VREF_0 | TDO |
| C | I/O L01N_3 | I/O L01P_3 | GND | I/O L20P_0 VREF_0 | I/O L17N_0 | I/O L16N_0 | I/O L13N_0 | I/O L11P_0 GCLK8 | I/O L10P_0 GCLK6 | I/O L09P_0 GCLK4 | I/O L07P_0 | I/O L03P_0 | I/O L01N_0 | GND | I/O L24N_1 A25 | I/O L24P_1 A24 |
| D | I/O L03P_3 | VCCO_3 | I/O L02N_3 | I/O L02P_3 | I/O L20N_0 PUDC_B | VCCAUX | I/O L16P_0 | I/O L11N_0 GCLK9 | I/O L09N_0 GCLK5 | I/O L06N_0 VREF_0 | I/O L06P_0 | I/O L03N_0 | I/O L01P_0 | I/O L23N_1 A23 | I/O L22N_1 A21 | I/O L22P_1 A20 |
| E | I/O L03N_3 | I/O L05N_3 | I/O L05P_3 | I/O L04P_3 | GND | INPUT | I/O L14N_0 VREF_0 | VCCO_0 | I/O L14P_0 | GND | VCCAUX | GND | I/O L23P_1 A22 | I/O L20P_1 A18 | VCCO_1 | I/O L18P_1 A14 |
| F | I/O L08P_3 | GND | I/O L07P_3 | I/O L04N_3 | VCCAUX | GND | GND | GND | GND | VCCINT | GND | VCCAUX | I/O L20N_1 A19 | I/O L19N_1 A17 | I/O L18N_1 A15 | I/O L16N_1 A11 |
| G | I/O L08N_3 VREF_3 | I/O L11P_3 LHCLK0 | I/O L07N_3 | INPUT VREF_3 | GND | GND | VCCINT | GND | VCCINT | GND | VCCINT | GND | I/O L19P_1 A16 | I/O L17N_1 A13 | GND | I/O L16P_1 A10 |
| H | I/O L11N_3 LHCLK1 | VCCO_3 | I/O L12P_3 LHCLK2 | VCCAUX | GND | VCCINT | GND | VCCINT | GND | VCCINT | GND | INPUT VREF_1 | I/O L17P_1 A12 | VCCAUX | I/O L15P_1 IRDY1 RHCLK6 | I/O L15N_1 RHCLK7 |
| J | I/O L14N_3 LHCLK5 | I/O L14P_3 LHCLK4 | I/O L12N_3 IRDY2 LHCLK3 | INPUT | INPUT VREF_3 | GND | VCCINT | GND | VCCINT | GND | VCCINT | I/O L10P_1 A8 | I/O L10N_1 A9 | INPUT VREF_1 | VCCO_1 | I/O L12N_1 TRDY1 RHCLK3 |
| K | I/O L15N_3 LHCLK7 | GND | I/O L15P_3 TRDY2 LHCLK6 | I/O L18P_3 | GND | VCCINT | GND | VCCINT | GND | VCCINT | GND | GND | I/O L06N_1 A3 | I/O L11N_1 RHCLK1 | I/O L11P_1 RHCLK0 | I/O L12P_1 RHCLK2 |
| L | I/O L16P_3 VREF_3 | I/O L16N_3 | I/O L18N_3 | I/O L19N_3 | VCCAUX | GND | VCCINT | GND | VCCINT | GND | GND | VCCAUX | I/O L06P_1 A2 | I/O L08P_1 A6 | GND | I/O L08N_1 A7 |
| M | I/O L20P_3 | VCCO_3 | I/O L19P_3 | I/O L24N_3 | GND | VCCAUX | INPUT VREF_2 | GND | INPUT VREF_2 | VCCAUX | INPUT VREF_2 | GND | INPUT VREF_1 | INPUT VREF_1 | I/O L07P_1 A4 | I/O L07N_1 A5 |
| N | I/O L20N_3 | I/O L22P_3 VREF_3 | I/O L24P_3 | I/O L01P_2 M1 | INPUT VREF_2 | I/O L04P_2 VS1 | GND | I/O L08N_2 D4 | I/O L11P_2 GCLK0 | GND | I/O L16N_2 | I/O L19P_2 | I/O L01P_1 HDC | I/O L01N_1 LDC2 | VCCO_1 | I/O L03N_1 A1 |
| P | I/O L22N_3 | I/O L23N_3 | GND | I/O L01N_2 M0 | I/O L04N_2 VS0 | INPUT VREF_2 | I/O L08P_2 D5 | I/O L10P_2 GCLK14 | I/O L11N_2 GCLK1 | I/O L14N_2 MOSI CSI_B | I/O L16P_2 | I/O L17N_2 D3 | I/O L19N_2 | GND | I/O L02N_1 LDC0 | I/O L03P_1 A0 |
| R | I/O L23P_3 | I/O L02P_2 M2 | I/O L03P_2 RDWR_B | VCCO_2 | I/O L05N_2 | GND | I/O L09P_2 GCLK12 | VCCO_2 | I/O L12P_2 GCLK2 | GND | I/O L15N_2 DOUT | VCCO_2 | I/O L18N_2 D1 | I/O L20N_2 CCLK | I/O L02P_1 LDC1 | SUSPEND |
| T | GND | I/O L02N_2 CSO_B | I/O L03N_2 VS2 | I/O L05P_2 | I/O L06P_2 D7 | I/O L06N_2 D6 | I/O L09N_2 GCLK13 | I/O L10N_2 GCLK15 | I/O L12N_2 GCLK3 | I/O L14P_2 | I/O L15P_2 AWAKE | I/O L17P_2 INIT_B | I/O L18P_2 D2 | I/O L20P_2 D0/DIN MISO | DONE | GND |

Bank 3 | Bank 1

Bank 2

DS529-4_012009

*Figure 22:* **XC3S700A and XC3S1400A FT256 Package Footprint (Top View)**

| | | | | | | | |
|---|---|---|---|---|---|---|---|
| 59 | **I/O:** Unrestricted, general-purpose user I/O | 51 | **DUAL:** Configuration, then possible user I/O | 18 | **VREF:** User I/O or input voltage reference for bank | 2 | **SUSPEND:** Dedicated SUSPEND and dual-purpose AWAKE Power Management pins |
| 2 | **INPUT:** Unrestricted, general-purpose input pin | 30 | **CLK:** User I/O, input, or global buffer input | 13 | **VCCO:** Output voltage supply for bank | | |
| 2 | **CONFIG:** Dedicated configuration pins | 4 | **JTAG:** Dedicated JTAG port pins | 15 | **VCCINT:** Internal core supply voltage (+1.2V) | | |
| 0 | **N.C.:** Not connected | 50 | **GND:** Ground | 10 | **VCCAUX:** Auxiliary supply voltage | | |

## FG320: 320-ball Fine-pitch Ball Grid Array

The 320-ball fine-pitch ball grid array package, FG320, supports two Spartan-3A FPGAs, the XC3S200A and the XC3S400A, as shown in Table 76 and Figure 23.

The FG320 package is an 18 x 18 array of solder balls minus the four center balls.

Table 76 lists all the package pins. They are sorted by bank number and then by pin name of the largest device. Pins that form a differential I/O pair appear together in the table. The table also shows the pin number for each pin and the pin type, as defined earlier.

The shaded rows indicate pinout differences between the XC3S200A and the XC3S400A FPGAs. The XC3S200A has three unconnected balls, indicated as N.C. (No Connection) in Table 76 and with the black diamond character (◆) in Table 76 and Figure 23.

All other balls have nearly identical functionality on all three devices. Table 79 summarizes the Spartan-3A FPGA footprint migration differences for the FG320 package.

An electronic version of this package pinout table and footprint diagram is available for download from the Xilinx website at

www.xilinx.com/support/documentation/data_sheets/s3a_pin.zip.

### Pinout Table

*Table 76:* **Spartan-3A FG320 Pinout**

| Bank | Pin Name | FG320 Ball | Type |
|---|---|---|---|
| 0 | IO_L01N_0 | C15 | I/O |
| 0 | IO_L01P_0 | C16 | I/O |
| 0 | IO_L02N_0 | A16 | I/O |
| 0 | IO_L02P_0/VREF_0 | B16 | VREF |
| 0 | IO_L03N_0 | A14 | I/O |
| 0 | IO_L03P_0 | A15 | I/O |
| 0 | IO_L04N_0 | C14 | I/O |
| 0 | IO_L04P_0 | B15 | I/O |
| 0 | IO_L05N_0 | D12 | I/O |
| 0 | IO_L05P_0 | C13 | I/O |
| 0 | IO_L06N_0/VREF_0 | A13 | VREF |
| 0 | IO_L06P_0 | B13 | I/O |
| 0 | IO_L07N_0 | B12 | I/O |
| 0 | IO_L07P_0 | C12 | I/O |
| 0 | IO_L08N_0 | F11 | I/O |
| 0 | IO_L08P_0 | E11 | I/O |
| 0 | IO_L09N_0 | A11 | I/O |

*Table 76:* **Spartan-3A FG320 Pinout*(Continued)***

| Bank | Pin Name | FG320 Ball | Type |
|---|---|---|---|
| 0 | IO_L09P_0 | B11 | I/O |
| 0 | IO_L10N_0 | D10 | I/O |
| 0 | IO_L10P_0 | C11 | I/O |
| 0 | IO_L11N_0/GCLK5 | C9 | GCLK |
| 0 | IO_L11P_0/GCLK4 | B10 | GCLK |
| 0 | IO_L12N_0/GCLK7 | B9 | GCLK |
| 0 | IO_L12P_0/GCLK6 | A10 | GCLK |
| 0 | IO_L13N_0/GCLK9 | B7 | GCLK |
| 0 | IO_L13P_0/GCLK8 | A8 | GCLK |
| 0 | IO_L14N_0/GCLK11 | C8 | GCLK |
| 0 | IO_L14P_0/GCLK10 | B8 | GCLK |
| 0 | IO_L15N_0 | C7 | I/O |
| 0 | IO_L15P_0 | D8 | I/O |
| 0 | IO_L16N_0 | E9 | I/O |
| 0 | IO_L16P_0 | D9 | I/O |
| 0 | IO_L17N_0 | B6 | I/O |
| 0 | IO_L17P_0 | A6 | I/O |
| 0 | IO_L18N_0/VREF_0 | A4 | VREF |
| 0 | IO_L18P_0 | A5 | I/O |
| 0 | IO_L19N_0 | E7 | I/O |
| 0 | IO_L19P_0 | F8 | I/O |
| 0 | IO_L20N_0 | D6 | I/O |
| 0 | IO_L20P_0 | C6 | I/O |
| 0 | IO_L21N_0 | A3 | I/O |
| 0 | IO_L21P_0 | B4 | I/O |
| 0 | IO_L22N_0 | D5 | I/O |
| 0 | IO_L22P_0 | C5 | I/O |
| 0 | IO_L23N_0 | A2 | I/O |
| 0 | IO_L23P_0 | B3 | I/O |
| 0 | IO_L24N_0/PUDC_B | E5 | DUAL |
| 0 | IO_L24P_0/VREF_0 | E6 | VREF |
| 0 | IP_0 | D13 | INPUT |
| 0 | IP_0 | D14 | INPUT |
| 0 | IP_0 | E12 | INPUT |
| 0 | ***XC3S400A:*** IP_0<br>***XC3S200A:*** N.C. (◆) | E13 | INPUT |
| 0 | IP_0 | F7 | INPUT |
| 0 | IP_0 | F9 | INPUT |
| 0 | IP_0 | F10 | INPUT |

*Table 76:* **Spartan-3A FG320 Pinout*(Continued)***

| Bank | Pin Name | FG320 Ball | Type |
|---|---|---|---|
| 0 | IP_0 | F12 | INPUT |
| 0 | IP_0 | G7 | INPUT |
| 0 | IP_0 | G8 | INPUT |
| 0 | IP_0 | G9 | INPUT |
| 0 | IP_0 | G11 | INPUT |
| 0 | IP_0/VREF_0 | E10 | VREF |
| 0 | VCCO_0 | B5 | VCCO |
| 0 | VCCO_0 | B14 | VCCO |
| 0 | VCCO_0 | D11 | VCCO |
| 0 | VCCO_0 | E8 | VCCO |
| 1 | IO_L01N_1/LDC2 | T17 | DUAL |
| 1 | IO_L01P_1/HDC | R16 | DUAL |
| 1 | IO_L02N_1/LDC0 | U18 | DUAL |
| 1 | IO_L02P_1/LDC1 | U17 | DUAL |
| 1 | IO_L03N_1/A1 | R17 | DUAL |
| 1 | IO_L03P_1/A0 | T18 | DUAL |
| 1 | IO_L05N_1 | N16 | I/O |
| 1 | IO_L05P_1 | P16 | I/O |
| 1 | IO_L06N_1 | M14 | I/O |
| 1 | IO_L06P_1 | N15 | I/O |
| 1 | IO_L07N_1/VREF_1 | P18 | VREF |
| 1 | IO_L07P_1 | R18 | I/O |
| 1 | IO_L09N_1/A3 | M17 | DUAL |
| 1 | IO_L09P_1/A2 | M16 | DUAL |
| 1 | IO_L10N_1/A5 | N18 | DUAL |
| 1 | IO_L10P_1/A4 | N17 | DUAL |
| 1 | IO_L11N_1/A7 | L12 | DUAL |
| 1 | IO_L11P_1/A6 | L13 | DUAL |
| 1 | IO_L13N_1/A9 | K16 | DUAL |
| 1 | IO_L13P_1/A8 | L17 | DUAL |
| 1 | IO_L14N_1/RHCLK1 | K17 | RHCLK |
| 1 | IO_L14P_1/RHCLK0 | L18 | RHCLK |
| 1 | IO_L15N_1/TRDY1/RHCLK3 | J17 | RHCLK |
| 1 | IO_L15P_1/RHCLK2 | K18 | RHCLK |
| 1 | IO_L17N_1/RHCLK5 | K15 | RHCLK |
| 1 | IO_L17P_1/RHCLK4 | J16 | RHCLK |
| 1 | IO_L18N_1/RHCLK7 | H17 | RHCLK |
| 1 | IO_L18P_1/IRDY1/RHCLK6 | H18 | RHCLK |
| 1 | IO_L19N_1/A11 | G16 | DUAL |
| 1 | IO_L19P_1/A10 | H16 | DUAL |

*Table 76:* **Spartan-3A FG320 Pinout*(Continued)***

| Bank | Pin Name | FG320 Ball | Type |
|---|---|---|---|
| 1 | IO_L21N_1 | F17 | I/O |
| 1 | IO_L21P_1 | G17 | I/O |
| 1 | IO_L22N_1/A13 | E18 | DUAL |
| 1 | IO_L22P_1/A12 | F18 | DUAL |
| 1 | IO_L23N_1/A15 | H15 | DUAL |
| 1 | IO_L23P_1/A14 | J14 | DUAL |
| 1 | IO_L25N_1 | D17 | I/O |
| 1 | IO_L25P_1 | D18 | I/O |
| 1 | IO_L26N_1/A17 | E16 | DUAL |
| 1 | IO_L26P_1/A16 | F16 | DUAL |
| 1 | IO_L27N_1/A19 | F15 | DUAL |
| 1 | IO_L27P_1/A18 | G15 | DUAL |
| 1 | IO_L29N_1/A21 | E15 | DUAL |
| 1 | IO_L29P_1/A20 | D16 | DUAL |
| 1 | IO_L30N_1/A23 | B18 | DUAL |
| 1 | IO_L30P_1/A22 | C18 | DUAL |
| 1 | IO_L31N_1/A25 | B17 | DUAL |
| 1 | IO_L31P_1/A24 | C17 | DUAL |
| 1 | IP_L04N_1/VREF_1 | N14 | VREF |
| 1 | IP_L04P_1 | P15 | INPUT |
| 1 | IP_L08N_1/VREF_1 | L14 | VREF |
| 1 | IP_L08P_1 | M13 | INPUT |
| 1 | IP_L12N_1 | L16 | INPUT |
| 1 | IP_L12P_1/VREF_1 | M15 | VREF |
| 1 | IP_L16N_1 | K14 | INPUT |
| 1 | IP_L16P_1 | K13 | INPUT |
| 1 | IP_L20N_1 | J13 | INPUT |
| 1 | IP_L20P_1/VREF_1 | K12 | VREF |
| 1 | IP_L24N_1 | G14 | INPUT |
| 1 | IP_L24P_1 | H13 | INPUT |
| 1 | IP_L28N_1 | G13 | INPUT |
| 1 | IP_L28P_1/VREF_1 | H12 | VREF |
| 1 | IP_L32N_1 | F13 | INPUT |
| 1 | IP_L32P_1/VREF_1 | F14 | VREF |
| 1 | VCCO_1 | E17 | VCCO |
| 1 | VCCO_1 | H14 | VCCO |
| 1 | VCCO_1 | L15 | VCCO |
| 1 | VCCO_1 | P17 | VCCO |
| 2 | IO_L01N_2/M0 | U3 | DUAL |
| 2 | IO_L01P_2/M1 | T3 | DUAL |

*Table 76:* **Spartan-3A FG320 Pinout*(Continued)***

| Bank | Pin Name | FG320 Ball | Type |
|---|---|---|---|
| 2 | IO_L02N_2/CSO_B | V3 | DUAL |
| 2 | IO_L02P_2/M2 | V2 | DUAL |
| 2 | IO_L03N_2/VS2 | U4 | DUAL |
| 2 | IO_L03P_2/RDWR_B | T4 | DUAL |
| 2 | IO_L04N_2 | T5 | I/O |
| 2 | IO_L04P_2 | R5 | I/O |
| 2 | IO_L05N_2/VS0 | V5 | DUAL |
| 2 | IO_L05P_2/VS1 | V4 | DUAL |
| 2 | IO_L06N_2 | U6 | I/O |
| 2 | IO_L06P_2 | T6 | I/O |
| 2 | IO_L07N_2 | P8 | I/O |
| 2 | IO_L07P_2 | N8 | I/O |
| 2 | IO_L08N_2/D6 | T7 | DUAL |
| 2 | IO_L08P_2/D7 | R7 | DUAL |
| 2 | IO_L09N_2 | R9 | I/O |
| 2 | IO_L09P_2 | T8 | I/O |
| 2 | IO_L10N_2/D4 | V6 | DUAL |
| 2 | IO_L10P_2/D5 | U7 | DUAL |
| 2 | IO_L11N_2/GCLK13 | V8 | GCLK |
| 2 | IO_L11P_2/GCLK12 | U8 | GCLK |
| 2 | IO_L12N_2/GCLK15 | V9 | GCLK |
| 2 | IO_L12P_2/GCLK14 | U9 | GCLK |
| 2 | IO_L13N_2/GCLK1 | T10 | GCLK |
| 2 | IO_L13P_2/GCLK0 | U10 | GCLK |
| 2 | IO_L14N_2/GCLK3 | U11 | GCLK |
| 2 | IO_L14P_2/GCLK2 | V11 | GCLK |
| 2 | IO_L15N_2 | R10 | I/O |
| 2 | IO_L15P_2 | P10 | I/O |
| 2 | IO_L16N_2/MOSI/CSI_B | T11 | DUAL |
| 2 | IO_L16P_2 | R11 | I/O |
| 2 | IO_L17N_2 | V13 | I/O |
| 2 | IO_L17P_2 | U12 | I/O |
| 2 | IO_L18N_2/DOUT | U13 | DUAL |
| 2 | IO_L18P_2/AWAKE | T12 | PWR MGMT |
| 2 | IO_L19N_2 | P12 | I/O |
| 2 | IO_L19P_2 | N12 | I/O |
| 2 | IO_L20N_2/D3 | R13 | DUAL |
| 2 | IO_L20P_2/INIT_B | T13 | DUAL |
| 2 | IO_L21N_2 | T14 | I/O |

*Table 76:* **Spartan-3A FG320 Pinout*(Continued)***

| Bank | Pin Name | FG320 Ball | Type |
|---|---|---|---|
| 2 | IO_L21P_2 | V14 | I/O |
| 2 | IO_L22N_2/D1 | U15 | DUAL |
| 2 | IO_L22P_2/D2 | V15 | DUAL |
| 2 | IO_L23N_2 | T15 | I/O |
| 2 | IO_L23P_2 | R14 | I/O |
| 2 | IO_L24N_2/CCLK | U16 | DUAL |
| 2 | IO_L24P_2/D0/DIN/MISO | V16 | DUAL |
| 2 | IP_2 | M8 | INPUT |
| 2 | IP_2 | M9 | INPUT |
| 2 | IP_2 | M12 | INPUT |
| 2 | ***XC3S400A:*** IP_2<br>***XC3S200A:*** N.C. (◆) | N7 | INPUT |
| 2 | IP_2 | N9 | INPUT |
| 2 | IP_2 | N11 | INPUT |
| 2 | IP_2 | R6 | INPUT |
| 2 | IP_2/VREF_2 | M11 | VREF |
| 2 | IP_2/VREF_2 | N10 | VREF |
| 2 | IP_2/VREF_2 | P6 | VREF |
| 2 | IP_2/VREF_2 | P7 | VREF |
| 2 | IP_2/VREF_2 | P9 | VREF |
| 2 | IP_2/VREF_2 | P13 | VREF |
| 2 | ***XC3S400A:*** IP_2/VREF_2<br>***XC3S200A:*** N.C. (◆) | P14 | VREF |
| 2 | VCCO_2 | P11 | VCCO |
| 2 | VCCO_2 | R8 | VCCO |
| 2 | VCCO_2 | U5 | VCCO |
| 2 | VCCO_2 | U14 | VCCO |
| 3 | IO_L01N_3 | C1 | I/O |
| 3 | IO_L01P_3 | C2 | I/O |
| 3 | IO_L02N_3 | B1 | I/O |
| 3 | IO_L02P_3 | B2 | I/O |
| 3 | IO_L03N_3 | D2 | I/O |
| 3 | IO_L03P_3 | D3 | I/O |
| 3 | IO_L05N_3 | G5 | I/O |
| 3 | IO_L05P_3 | F5 | I/O |
| 3 | IO_L06N_3 | E3 | I/O |
| 3 | IO_L06P_3 | F4 | I/O |
| 3 | IO_L07N_3 | E1 | I/O |
| 3 | IO_L07P_3 | D1 | I/O |
| 3 | IO_L09N_3 | G4 | I/O |
| 3 | IO_L09P_3 | F3 | I/O |

*Table 76:* **Spartan-3A FG320 Pinout*(Continued)***

| Bank | Pin Name | FG320 Ball | Type |
|---|---|---|---|
| 3 | IO_L10N_3/VREF_3 | F1 | VREF |
| 3 | IO_L10P_3 | F2 | I/O |
| 3 | IO_L11N_3 | J6 | I/O |
| 3 | IO_L11P_3 | J7 | I/O |
| 3 | IO_L13N_3 | H1 | I/O |
| 3 | IO_L13P_3 | H2 | I/O |
| 3 | IO_L14N_3/LHCLK1 | J3 | LHCLK |
| 3 | IO_L14P_3/LHCLK0 | H3 | LHCLK |
| 3 | IO_L15N_3/IRDY2/LHCLK3 | J1 | LHCLK |
| 3 | IO_L15P_3/LHCLK2 | J2 | LHCLK |
| 3 | IO_L17N_3/LHCLK5 | K5 | LHCLK |
| 3 | IO_L17P_3/LHCLK4 | J4 | LHCLK |
| 3 | IO_L18N_3/LHCLK7 | K3 | LHCLK |
| 3 | IO_L18P_3/TRDY2/LHCLK6 | K2 | LHCLK |
| 3 | IO_L19N_3 | L2 | I/O |
| 3 | IO_L19P_3/VREF_3 | L1 | VREF |
| 3 | IO_L21N_3 | M2 | I/O |
| 3 | IO_L21P_3 | N1 | I/O |
| 3 | IO_L22N_3 | N2 | I/O |
| 3 | IO_L22P_3 | P1 | I/O |
| 3 | IO_L23N_3 | L4 | I/O |
| 3 | IO_L23P_3 | L3 | I/O |
| 3 | IO_L25N_3 | R2 | I/O |
| 3 | IO_L25P_3 | R1 | I/O |
| 3 | IO_L26N_3 | N4 | I/O |
| 3 | IO_L26P_3 | N3 | I/O |
| 3 | IO_L27N_3 | T2 | I/O |
| 3 | IO_L27P_3 | T1 | I/O |
| 3 | IO_L29N_3 | N6 | I/O |
| 3 | IO_L29P_3 | N5 | I/O |
| 3 | IO_L30N_3 | R3 | I/O |
| 3 | IO_L30P_3 | P3 | I/O |
| 3 | IO_L31N_3 | U2 | I/O |
| 3 | IO_L31P_3 | U1 | I/O |
| 3 | IP_L04N_3/VREF_3 | H7 | VREF |
| 3 | IP_L04P_3 | G6 | INPUT |
| 3 | IP_L08N_3/VREF_3 | H5 | VREF |
| 3 | IP_L08P_3 | H6 | INPUT |
| 3 | IP_L12N_3 | G2 | INPUT |
| 3 | IP_L12P_3 | G3 | INPUT |

*Table 76:* **Spartan-3A FG320 Pinout*(Continued)***

| Bank | Pin Name | FG320 Ball | Type |
|---|---|---|---|
| 3 | IP_L16N_3 | K6 | INPUT |
| 3 | IP_L16P_3 | J5 | INPUT |
| 3 | IP_L20N_3 | L6 | INPUT |
| 3 | IP_L20P_3 | L7 | INPUT |
| 3 | IP_L24N_3 | M4 | INPUT |
| 3 | IP_L24P_3 | M3 | INPUT |
| 3 | IP_L28N_3 | M5 | INPUT |
| 3 | IP_L28P_3 | M6 | INPUT |
| 3 | IP_L32N_3/VREF_3 | P4 | VREF |
| 3 | IP_L32P_3 | P5 | INPUT |
| 3 | VCCO_3 | E2 | VCCO |
| 3 | VCCO_3 | H4 | VCCO |
| 3 | VCCO_3 | L5 | VCCO |
| 3 | VCCO_3 | P2 | VCCO |
| GND | GND | A1 | GND |
| GND | GND | A7 | GND |
| GND | GND | A12 | GND |
| GND | GND | A18 | GND |
| GND | GND | C10 | GND |
| GND | GND | D4 | GND |
| GND | GND | D7 | GND |
| GND | GND | D15 | GND |
| GND | GND | F6 | GND |
| GND | GND | G1 | GND |
| GND | GND | G12 | GND |
| GND | GND | G18 | GND |
| GND | GND | H8 | GND |
| GND | GND | H10 | GND |
| GND | GND | J11 | GND |
| GND | GND | J15 | GND |
| GND | GND | K4 | GND |
| GND | GND | K8 | GND |
| GND | GND | L9 | GND |
| GND | GND | L11 | GND |
| GND | GND | M1 | GND |
| GND | GND | M7 | GND |
| GND | GND | M18 | GND |
| GND | GND | N13 | GND |
| GND | GND | R4 | GND |
| GND | GND | R12 | GND |

*Table 76:* **Spartan-3A FG320 Pinout*(Continued)***

| Bank | Pin Name | FG320 Ball | Type |
|---|---|---|---|
| GND | GND | R15 | GND |
| GND | GND | T9 | GND |
| GND | GND | V1 | GND |
| GND | GND | V7 | GND |
| GND | GND | V12 | GND |
| GND | GND | V18 | GND |
| VCCAUX | SUSPEND | T16 | PWR MGMT |
| VCCAUX | DONE | V17 | CONFIG |
| VCCAUX | PROG_B | C4 | CONFIG |
| VCCAUX | TCK | A17 | JTAG |
| VCCAUX | TDI | E4 | JTAG |
| VCCAUX | TDO | E14 | JTAG |
| VCCAUX | TMS | C3 | JTAG |
| VCCAUX | VCCAUX | A9 | VCCAUX |
| VCCAUX | VCCAUX | G10 | VCCAUX |
| VCCAUX | VCCAUX | J12 | VCCAUX |
| VCCAUX | VCCAUX | J18 | VCCAUX |
| VCCAUX | VCCAUX | K1 | VCCAUX |
| VCCAUX | VCCAUX | K7 | VCCAUX |
| VCCAUX | VCCAUX | M10 | VCCAUX |
| VCCAUX | VCCAUX | V10 | VCCAUX |
| VCCINT | VCCINT | H9 | VCCINT |
| VCCINT | VCCINT | H11 | VCCINT |
| VCCINT | VCCINT | J8 | VCCINT |
| VCCINT | VCCINT | K11 | VCCINT |
| VCCINT | VCCINT | L8 | VCCINT |
| VCCINT | VCCINT | L10 | VCCINT |

## User I/Os by Bank

Table 77 and Table 78 indicate how the available user-I/O pins are distributed between the four I/O banks on the FG320 package. The AWAKE pin is counted as a dual-purpose I/O.

*Table 77:* **User I/Os Per Bank for XC3S200A in the FG320 Package**

| Package Edge | I/O Bank | Maximum I/O | All Possible I/O Pins by Type | | | | |
|---|---|---|---|---|---|---|---|
| | | | I/O | INPUT | DUAL | VREF | CLK |
| Top | 0 | 60 | 35 | 11 | 1 | 5 | 8 |
| Right | 1 | 64 | 9 | 10 | 30 | 7 | 8 |
| Bottom | 2 | 60 | 19 | 6 | 21 | 6 | 8 |
| Left | 3 | 64 | 38 | 13 | 0 | 5 | 8 |
| **TOTAL** | | **248** | **101** | **40** | **52** | **23** | **32** |

*Table 78:* **User I/Os Per Bank for XC3S400A in the FG320 Package**

| Package Edge | I/O Bank | Maximum I/O | All Possible I/O Pins by Type | | | | |
|---|---|---|---|---|---|---|---|
| | | | I/O | INPUT | DUAL | VREF | CLK |
| Top | 0 | 61 | 35 | 12 | 1 | 5 | 8 |
| Right | 1 | 64 | 9 | 10 | 30 | 7 | 8 |
| Bottom | 2 | 62 | 19 | 7 | 21 | 7 | 8 |
| Left | 3 | 64 | 38 | 13 | 0 | 5 | 8 |
| **TOTAL** | | **251** | **101** | **42** | **52** | **24** | **32** |

## Footprint Migration Differences

Table 79 summarizes any footprint and functionality differences between the XC3S200A and the XC3S400A FPGAs that might affect easy migration between devices available in the FG320 package. There are three such balls. All other pins not listed in Table 79 unconditionally migrate between Spartan-3A devices available in the FG320 package.

The arrows indicate the direction for easy migration.

*Table 79:* **FG320 Footprint Migration Differences**

| Pin | Bank | XC3S200A | Migration | XC3S400A |
|---|---|---|---|---|
| E13 | 0 | N.C. | → | INPUT |
| N7 | 2 | N.C. | → | INPUT |
| P14 | 2 | N.C. | → | INPUT/VREF |
| **DIFFERENCES** | | | **3** | |

Legend:

→ This pin can unconditionally migrate from the device on the left to the device on the right. Migration in the other direction is possible depending on how the pin is configured for the device on the right.

## FG320 Footprint

Bank 0

| | 1 | 2 | 3 | 4 | 5 | 6 | 7 | 8 | 9 | 10 | 11 | 12 | 13 | 14 | 15 | 16 | 17 | 18 |
|---|---|---|---|---|---|---|---|---|---|---|---|---|---|---|---|---|---|---|
| A | GND | I/O L23N_0 | I/O L21N_0 | I/O L18N_0 VREF_0 | I/O L18P_0 | I/O L17P_0 | GND | I/O L13P_0 GCLK8 | VCCAUX | I/O L12P_0 GCLK6 | I/O L09N_0 | GND | I/O L06N_0 VREF_0 | I/O L03N_0 | I/O L03P_0 | I/O L02N_0 | TCK | GND |
| B | I/O L02N_3 | I/O L02P_3 | I/O L23P_0 | I/O L21P_0 | VCCO_0 | I/O L17N_0 | I/O L13N_0 GCLK9 | I/O L14P_0 GCLK10 | I/O L12N_0 GCLK7 | I/O L11P_0 GCLK4 | I/O L09P_0 | I/O L07N_0 | I/O L06P_0 | VCCO_0 | I/O L04P_0 | I/O L02P_0 VREF_0 | I/O L31N_1 A25 | I/O L30N_1 A23 |
| C | I/O L01N_3 | I/O L01P_3 | TMS | PROG_B | I/O L22P_0 | I/O L20P_0 | I/O L15N_0 | I/O L14N_0 GCLK11 | I/O L11N_0 GCLK5 | GND | I/O L10P_0 | I/O L07P_0 | I/O L05P_0 | I/O L04N_0 | I/O L01N_0 | I/O L01P_0 | I/O L31P_1 A24 | I/O L30P_1 A22 |
| D | I/O L07P_3 | I/O L03N_3 | I/O L03P_3 | GND | I/O L22N_0 | I/O L20N_0 | GND | I/O L15P_0 | I/O L16P_0 | I/O L10N_0 | VCCO_0 | I/O L05N_0 | INPUT | INPUT | GND | I/O L29P_1 A20 | I/O L25N_1 | I/O L25P_1 |
| E | I/O L07N_3 | VCCO_3 | I/O L06N_3 | TDI | I/O L24N_0 PUDC_B | I/O L24P_0 VREF_0 | I/O L19N_0 | VCCO_0 | I/O L16N_0 | INPUT VREF_0 | I/O L08P_0 | INPUT | INPUT ◆ | TDO | I/O L29N_1 A21 | I/O L26N_1 A17 | VCCO_1 | I/O L22N_1 A13 |
| F | I/O L10N_3 VREF_3 | I/O L10P_3 | I/O L09P_3 | I/O L06P_3 | I/O L05P_3 | GND | INPUT | I/O L19P_0 | INPUT | INPUT | I/O L08N_0 | INPUT | INPUT L32N_1 | INPUT L32P_1 VREF_1 | I/O L27N_1 A19 | I/O L26P_1 A16 | I/O L21N_1 | I/O L22P_1 A12 |
| G | GND | INPUT L12N_3 | INPUT L12P_3 | I/O L09N_3 | I/O L05N_3 | INPUT L04P_3 | INPUT | INPUT | INPUT | VCCAUX | INPUT | GND | INPUT L28N_1 | INPUT L24N_1 | I/O L27P_1 A18 | I/O L19N_1 A11 | I/O L21P_1 | GND |
| H | I/O L13N_3 | I/O L13P_3 | I/O L14P_3 LHCLK0 | VCCO_3 | INPUT L08N_3 VREF_3 | INPUT L08P_3 | INPUT L04N_3 VREF_3 | GND | VCCINT | GND | VCCINT | INPUT L28P_1 VREF_1 | INPUT L24P_1 | VCCO_1 | I/O L23N_1 A15 | I/O L19P_1 A10 | I/O L18N_1 RHCLK7 | I/O L18P_1 IRDY1 RHCLK6 |
| J | I/O L15N_3 IRDY2 LHCLK3 | I/O L15P_3 LHCLK2 | I/O L14N_3 LHCLK1 | I/O L17P_3 LHCLK4 | INPUT L16P_3 | I/O L11N_3 | I/O L11P_3 | VCCINT | | | GND | VCCAUX | INPUT L20N_1 | I/O L23P_1 A14 | GND | I/O L17P_1 RHCLK4 | I/O L15N_1 TRDY1 RHCLK3 | VCCAUX |
| K | VCCAUX | I/O L18P_3 TRDY2 LHCLK6 | I/O L18N_3 LHCLK7 | GND | I/O L17N_3 LHCLK5 | INPUT L16N_3 | VCCAUX | GND | | | VCCINT | INPUT L20P_1 VREF_1 | INPUT L16P_1 | INPUT L16N_1 | I/O L17N_1 RHCLK5 | I/O L13N_1 A9 | I/O L14N_1 RHCLK1 | I/O L15P_1 RHCLK2 |
| L | I/O L19P_3 VREF_3 | I/O L19N_3 | I/O L23P_3 | I/O L23N_3 | VCCO_3 | INPUT L20N_3 | INPUT L20P_3 | VCCINT | GND | VCCINT | GND | I/O L11N_1 A7 | I/O L11P_1 A6 | INPUT L08N_1 VREF_1 | VCCO_1 | INPUT L12N_1 | I/O L13P_1 A8 | I/O L14P_1 RHCLK0 |
| M | GND | I/O L21N_3 | INPUT L24P_3 | INPUT L24N_3 | INPUT L28N_3 | INPUT L28P_3 | GND | INPUT | INPUT | VCCAUX | INPUT VREF_2 | INPUT | INPUT L08P_1 | I/O L06N_1 | INPUT L12P_1 VREF_1 | I/O L09P_1 A2 | I/O L09N_1 A3 | GND |
| N | I/O L21P_3 | I/O L22N_3 | I/O L26P_3 | I/O L26N_3 | I/O L29P_3 | I/O L29N_3 | INPUT ◆ | I/O L07P_2 | INPUT | INPUT VREF_2 | INPUT | I/O L19P_2 | GND | INPUT L04N_1 VREF_1 | I/O L06P_1 | I/O L05N_1 | I/O L10P_1 A4 | I/O L10N_1 A5 |
| P | I/O L22P_3 | VCCO_3 | I/O L30P_3 | INPUT L32N_3 VREF_3 | INPUT L32P_3 | INPUT VREF_2 | INPUT VREF_2 | I/O L07N_2 | INPUT VREF_2 | I/O L15P_2 | VCCO_2 | I/O L19N_2 | INPUT VREF_2 | INPUT VREF_2 ◆ | INPUT L04P_1 | I/O L05P_1 | VCCO_1 | I/O L07N_1 VREF_1 |
| R | I/O L25P_3 | I/O L25N_3 | I/O L30N_3 | GND | I/O L04P_2 | INPUT | I/O L08P_2 D7 | VCCO_2 | I/O L09N_2 | I/O L15N_2 | I/O L16P_2 | GND | I/O L20N_2 D3 | I/O L23P_2 | GND | I/O L01P_1 HDC | I/O L03N_1 A1 | I/O L07P_1 |
| T | I/O L27P_3 | I/O L27N_3 | I/O L01P_2 M1 | I/O L03P_2 RDWR_B | I/O L04N_2 | I/O L06P_2 | I/O L08N_2 D6 | I/O L09P_2 | GND | I/O L13N_2 GCLK1 | I/O L16N_2 MOSI CSI_B | I/O L18P_2 AWAKE | I/O L20P_2 INIT_B | I/O L21N_2 | I/O L23N_2 | SUSPEND | I/O L01N_1 LDC2 | I/O L03P_1 A0 |
| U | I/O L31P_3 | I/O L31N_3 | I/O L01N_2 M0 | I/O L03N_2 VS2 | VCCO_2 | I/O L06N_2 | I/O L10P_2 D5 | I/O L11P_2 GCLK12 | I/O L12P_2 GCLK14 | I/O L13P_2 GCLK0 | I/O L14N_2 GCLK3 | I/O L17P_2 | I/O L18N_2 DOUT | VCCO_2 | I/O L22N_2 D1 | I/O L24N_2 CCLK | I/O L02P_1 LDC1 | I/O L02N_1 LDC0 |
| V | GND | I/O L02P_2 M2 | I/O L02N_2 CSO_B | I/O L05P_2 VS1 | I/O L05N_2 VS0 | I/O L10N_2 D4 | GND | I/O L11N_2 GCLK13 | I/O L12N_2 GCLK15 | VCCAUX | I/O L14P_2 GCLK2 | GND | I/O L17N_2 | I/O L21P_2 | I/O L22P_2 D2 | I/O L24P_2 D0 DIN/MISO | DONE | GND |

Bank 3 | Bank 1

Bank 2

DS529-4_05_012009

*Figure 23:* **FG320 Package Footprint (Top View)**

| | | | | | | | |
|---|---|---|---|---|---|---|---|
| 101 | **I/O:** Unrestricted, general-purpose user I/O | 51 | **DUAL:** Configuration pins, then possible user-I/O | 23 - 24 | **VREF:** User I/O or input voltage reference for bank | 2 | **SUSPEND:** Dedicated SUSPEND and dual-purpose AWAKE Power Management pins |
| 40 - 42 | **INPUT:** Unrestricted, general-purpose input pin | 32 | **CLK:** User I/O, input, or global buffer input | 16 | **VCCO:** Output voltage supply for bank | | |
| 2 | **CONFIG:** Dedicated configuration pins | 4 | **JTAG:** Dedicated JTAG port pins | 6 | **VCCINT:** Internal core supply voltage (+1.2V) | | |
| 3 | **N.C.:** Not connected. Only the XC3S200A has these pins (◆). | 32 | **GND:** Ground | 8 | **VCCAUX:** Auxiliary supply voltage | | |

## FG400: 400-ball Fine-pitch Ball Grid Array

The 400-ball fine-pitch ball grid array, FG400, supports two different Spartan-3A FPGAs, the XC3S400A and the XC3S700A. Both devices share a common footprint for this package as shown in Table 80 and Figure 24.

Table 80 lists all the FG400 package pins. They are sorted by bank number and then by pin name. Pairs of pins that form a differential I/O pair appear together in the table. The table also shows the pin number for each pin and the pin type, as defined earlier.

An electronic version of this package pinout table and footprint diagram is available for download from the Xilinx website at

www.xilinx.com/support/documentation/data_sheets/s3a_pin.zip.

### Pinout Table

*Table 80:* **Spartan-3A FG400 Pinout**

| Bank | Pin Name | FG400 Ball | Type |
|---|---|---|---|
| 0 | IO_L01N_0 | A18 | I/O |
| 0 | IO_L01P_0 | B18 | I/O |
| 0 | IO_L02N_0 | C17 | I/O |
| 0 | IO_L02P_0/VREF_0 | D17 | VREF |
| 0 | IO_L03N_0 | E15 | I/O |
| 0 | IO_L03P_0 | D16 | I/O |
| 0 | IO_L04N_0 | A17 | I/O |
| 0 | IO_L04P_0/VREF_0 | B17 | VREF |
| 0 | IO_L05N_0 | A16 | I/O |
| 0 | IO_L05P_0 | C16 | I/O |
| 0 | IO_L06N_0 | C15 | I/O |
| 0 | IO_L06P_0 | D15 | I/O |
| 0 | IO_L07N_0 | A14 | I/O |
| 0 | IO_L07P_0 | C14 | I/O |
| 0 | IO_L08N_0 | A15 | I/O |
| 0 | IO_L08P_0 | B15 | I/O |
| 0 | IO_L09N_0 | F13 | I/O |
| 0 | IO_L09P_0 | E13 | I/O |
| 0 | IO_L10N_0/VREF_0 | C13 | VREF |
| 0 | IO_L10P_0 | D14 | I/O |
| 0 | IO_L11N_0 | C12 | I/O |
| 0 | IO_L11P_0 | B13 | I/O |
| 0 | IO_L12N_0 | F12 | I/O |
| 0 | IO_L12P_0 | D12 | I/O |
| 0 | IO_L13N_0 | A12 | I/O |

*Table 80:* **Spartan-3A FG400 Pinout*(Continued)***

| Bank | Pin Name | FG400 Ball | Type |
|---|---|---|---|
| 0 | IO_L13P_0 | B12 | I/O |
| 0 | IO_L14N_0 | C11 | I/O |
| 0 | IO_L14P_0 | B11 | I/O |
| 0 | IO_L15N_0/GCLK5 | E11 | GCLK |
| 0 | IO_L15P_0/GCLK4 | D11 | GCLK |
| 0 | IO_L16N_0/GCLK7 | C10 | GCLK |
| 0 | IO_L16P_0/GCLK6 | A10 | GCLK |
| 0 | IO_L17N_0/GCLK9 | E10 | GCLK |
| 0 | IO_L17P_0/GCLK8 | D10 | GCLK |
| 0 | IO_L18N_0/GCLK11 | A8 | GCLK |
| 0 | IO_L18P_0/GCLK10 | A9 | GCLK |
| 0 | IO_L19N_0 | C9 | I/O |
| 0 | IO_L19P_0 | B9 | I/O |
| 0 | IO_L20N_0 | C8 | I/O |
| 0 | IO_L20P_0 | B8 | I/O |
| 0 | IO_L21N_0 | D8 | I/O |
| 0 | IO_L21P_0 | C7 | I/O |
| 0 | IO_L22N_0/VREF_0 | F9 | VREF |
| 0 | IO_L22P_0 | E9 | I/O |
| 0 | IO_L23N_0 | F8 | I/O |
| 0 | IO_L23P_0 | E8 | I/O |
| 0 | IO_L24N_0 | A7 | I/O |
| 0 | IO_L24P_0 | B7 | I/O |
| 0 | IO_L25N_0 | C6 | I/O |
| 0 | IO_L25P_0 | A6 | I/O |
| 0 | IO_L26N_0 | B5 | I/O |
| 0 | IO_L26P_0 | A5 | I/O |
| 0 | IO_L27N_0 | F7 | I/O |
| 0 | IO_L27P_0 | E7 | I/O |
| 0 | IO_L28N_0 | D6 | I/O |
| 0 | IO_L28P_0 | C5 | I/O |
| 0 | IO_L29N_0 | C4 | I/O |
| 0 | IO_L29P_0 | A4 | I/O |
| 0 | IO_L30N_0 | B3 | I/O |
| 0 | IO_L30P_0 | A3 | I/O |
| 0 | IO_L31N_0 | F6 | I/O |
| 0 | IO_L31P_0 | E6 | I/O |
| 0 | IO_L32N_0/PUDC_B | B2 | DUAL |

*Table 80:* **Spartan-3A FG400 Pinout*(Continued)***

| Bank | Pin Name | FG400 Ball | Type |
|---|---|---|---|
| 0 | IO_L32P_0/VREF_0 | A2 | VREF |
| 0 | IP_0 | E14 | INPUT |
| 0 | IP_0 | F11 | INPUT |
| 0 | IP_0 | F14 | INPUT |
| 0 | IP_0 | G8 | INPUT |
| 0 | IP_0 | G9 | INPUT |
| 0 | IP_0 | G10 | INPUT |
| 0 | IP_0 | G12 | INPUT |
| 0 | IP_0 | G13 | INPUT |
| 0 | IP_0 | H9 | INPUT |
| 0 | IP_0 | H10 | INPUT |
| 0 | IP_0 | H11 | INPUT |
| 0 | IP_0 | H12 | INPUT |
| 0 | IP_0/VREF_0 | G11 | VREF |
| 0 | VCCO_0 | B4 | VCCO |
| 0 | VCCO_0 | B10 | VCCO |
| 0 | VCCO_0 | B16 | VCCO |
| 0 | VCCO_0 | D7 | VCCO |
| 0 | VCCO_0 | D13 | VCCO |
| 0 | VCCO_0 | F10 | VCCO |
| 1 | IO_L01N_1/LDC2 | V20 | DUAL |
| 1 | IO_L01P_1/HDC | W20 | DUAL |
| 1 | IO_L02N_1/LDC0 | U18 | DUAL |
| 1 | IO_L02P_1/LDC1 | V19 | DUAL |
| 1 | IO_L03N_1/A1 | R16 | DUAL |
| 1 | IO_L03P_1/A0 | T17 | DUAL |
| 1 | IO_L05N_1 | T20 | I/O |
| 1 | IO_L05P_1 | T18 | I/O |
| 1 | IO_L06N_1 | U20 | I/O |
| 1 | IO_L06P_1 | U19 | I/O |
| 1 | IO_L07N_1 | P17 | I/O |
| 1 | IO_L07P_1 | P16 | I/O |
| 1 | IO_L08N_1 | R17 | I/O |
| 1 | IO_L08P_1 | R18 | I/O |
| 1 | IO_L09N_1 | R20 | I/O |
| 1 | IO_L09P_1 | R19 | I/O |
| 1 | IO_L10N_1/VREF_1 | P20 | VREF |
| 1 | IO_L10P_1 | P18 | I/O |
| 1 | IO_L12N_1/A3 | N17 | DUAL |
| 1 | IO_L12P_1/A2 | N15 | DUAL |

*Table 80:* **Spartan-3A FG400 Pinout*(Continued)***

| Bank | Pin Name | FG400 Ball | Type |
|---|---|---|---|
| 1 | IO_L13N_1/A5 | N19 | DUAL |
| 1 | IO_L13P_1/A4 | N18 | DUAL |
| 1 | IO_L14N_1/A7 | M18 | DUAL |
| 1 | IO_L14P_1/A6 | M17 | DUAL |
| 1 | IO_L16N_1/A9 | L16 | DUAL |
| 1 | IO_L16P_1/A8 | L15 | DUAL |
| 1 | IO_L17N_1/RHCLK1 | M20 | RHCLK |
| 1 | IO_L17P_1/RHCLK0 | M19 | RHCLK |
| 1 | IO_L18N_1/TRDY1/RHCLK3 | L18 | RHCLK |
| 1 | IO_L18P_1/RHCLK2 | L19 | RHCLK |
| 1 | IO_L20N_1/RHCLK5 | L17 | RHCLK |
| 1 | IO_L20P_1/RHCLK4 | K18 | RHCLK |
| 1 | IO_L21N_1/RHCLK7 | J20 | RHCLK |
| 1 | IO_L21P_1/IRDY1/RHCLK6 | K20 | RHCLK |
| 1 | IO_L22N_1/A11 | J18 | DUAL |
| 1 | IO_L22P_1/A10 | J19 | DUAL |
| 1 | IO_L24N_1 | K16 | I/O |
| 1 | IO_L24P_1 | J17 | I/O |
| 1 | IO_L25N_1/A13 | H18 | DUAL |
| 1 | IO_L25P_1/A12 | H19 | DUAL |
| 1 | IO_L26N_1/A15 | G20 | DUAL |
| 1 | IO_L26P_1/A14 | H20 | DUAL |
| 1 | IO_L28N_1 | H17 | I/O |
| 1 | IO_L28P_1 | G18 | I/O |
| 1 | IO_L29N_1/A17 | F19 | DUAL |
| 1 | IO_L29P_1/A16 | F20 | DUAL |
| 1 | IO_L30N_1/A19 | F18 | DUAL |
| 1 | IO_L30P_1/A18 | G17 | DUAL |
| 1 | IO_L32N_1 | E19 | I/O |
| 1 | IO_L32P_1 | E20 | I/O |
| 1 | IO_L33N_1 | F17 | I/O |
| 1 | IO_L33P_1 | E18 | I/O |
| 1 | IO_L34N_1 | D18 | I/O |
| 1 | IO_L34P_1 | D20 | I/O |
| 1 | IO_L36N_1/A21 | F16 | DUAL |
| 1 | IO_L36P_1/A20 | G16 | DUAL |
| 1 | IO_L37N_1/A23 | C19 | DUAL |
| 1 | IO_L37P_1/A22 | C20 | DUAL |
| 1 | IO_L38N_1/A25 | B19 | DUAL |
| 1 | IO_L38P_1/A24 | B20 | DUAL |

*Table 80:* **Spartan-3A FG400 Pinout*(Continued)***

| Bank | Pin Name | FG400 Ball | Type |
|---|---|---|---|
| 1 | IP_1/VREF_1 | N14 | VREF |
| 1 | IP_L04N_1/VREF_1 | P15 | VREF |
| 1 | IP_L04P_1 | P14 | INPUT |
| 1 | IP_L11N_1/VREF_1 | M15 | VREF |
| 1 | IP_L11P_1 | M16 | INPUT |
| 1 | IP_L15N_1 | M13 | INPUT |
| 1 | IP_L15P_1/VREF_1 | M14 | VREF |
| 1 | IP_L19N_1 | L13 | INPUT |
| 1 | IP_L19P_1 | L14 | INPUT |
| 1 | IP_L23N_1 | K14 | INPUT |
| 1 | IP_L23P_1/VREF_1 | K15 | VREF |
| 1 | IP_L27N_1 | J15 | INPUT |
| 1 | IP_L27P_1 | J16 | INPUT |
| 1 | IP_L31N_1 | J13 | INPUT |
| 1 | IP_L31P_1/VREF_1 | J14 | VREF |
| 1 | IP_L35N_1 | H14 | INPUT |
| 1 | IP_L35P_1 | H15 | INPUT |
| 1 | IP_L39N_1 | G14 | INPUT |
| 1 | IP_L39P_1/VREF_1 | G15 | VREF |
| 1 | VCCO_1 | D19 | VCCO |
| 1 | VCCO_1 | H16 | VCCO |
| 1 | VCCO_1 | K19 | VCCO |
| 1 | VCCO_1 | N16 | VCCO |
| 1 | VCCO_1 | T19 | VCCO |
| 2 | IO_L01N_2/M0 | V4 | DUAL |
| 2 | IO_L01P_2/M1 | U4 | DUAL |
| 2 | IO_L02N_2/CSO_B | Y2 | DUAL |
| 2 | IO_L02P_2/M2 | W3 | DUAL |
| 2 | IO_L03N_2 | W4 | I/O |
| 2 | IO_L03P_2 | Y3 | I/O |
| 2 | IO_L04N_2 | R7 | I/O |
| 2 | IO_L04P_2 | T6 | I/O |
| 2 | IO_L05N_2 | U5 | I/O |
| 2 | IO_L05P_2 | V5 | I/O |
| 2 | IO_L06N_2 | U6 | I/O |
| 2 | IO_L06P_2 | T7 | I/O |
| 2 | IO_L07N_2/VS2 | U7 | DUAL |
| 2 | IO_L07P_2/RDWR_B | T8 | DUAL |
| 2 | IO_L08N_2 | Y5 | I/O |
| 2 | IO_L08P_2 | Y4 | I/O |

*Table 80:* **Spartan-3A FG400 Pinout*(Continued)***

| Bank | Pin Name | FG400 Ball | Type |
|---|---|---|---|
| 2 | IO_L09N_2/VS0 | W6 | DUAL |
| 2 | IO_L09P_2/VS1 | V6 | DUAL |
| 2 | IO_L10N_2 | Y7 | I/O |
| 2 | IO_L10P_2 | Y6 | I/O |
| 2 | IO_L11N_2 | U9 | I/O |
| 2 | IO_L11P_2 | T9 | I/O |
| 2 | IO_L12N_2/D6 | W8 | DUAL |
| 2 | IO_L12P_2/D7 | V7 | DUAL |
| 2 | IO_L13N_2 | V9 | I/O |
| 2 | IO_L13P_2 | V8 | I/O |
| 2 | IO_L14N_2/D4 | T10 | DUAL |
| 2 | IO_L14P_2/D5 | U10 | DUAL |
| 2 | IO_L15N_2/GCLK13 | Y9 | GCLK |
| 2 | IO_L15P_2/GCLK12 | W9 | GCLK |
| 2 | IO_L16N_2/GCLK15 | W10 | GCLK |
| 2 | IO_L16P_2/GCLK14 | V10 | GCLK |
| 2 | IO_L17N_2/GCLK1 | V11 | GCLK |
| 2 | IO_L17P_2/GCLK0 | Y11 | GCLK |
| 2 | IO_L18N_2/GCLK3 | V12 | GCLK |
| 2 | IO_L18P_2/GCLK2 | U11 | GCLK |
| 2 | IO_L19N_2 | R12 | I/O |
| 2 | IO_L19P_2 | T12 | I/O |
| 2 | IO_L20N_2/MOSI/CSI_B | W12 | DUAL |
| 2 | IO_L20P_2 | Y12 | I/O |
| 2 | IO_L21N_2 | W13 | I/O |
| 2 | IO_L21P_2 | Y13 | I/O |
| 2 | IO_L22N_2/DOUT | V13 | DUAL |
| 2 | IO_L22P_2/AWAKE | U13 | PWR MGMT |
| 2 | IO_L23N_2 | R13 | I/O |
| 2 | IO_L23P_2 | T13 | I/O |
| 2 | IO_L24N_2/D3 | W14 | DUAL |
| 2 | IO_L24P_2/INIT_B | Y14 | DUAL |
| 2 | IO_L25N_2 | T14 | I/O |
| 2 | IO_L25P_2 | V14 | I/O |
| 2 | IO_L26N_2/D1 | V15 | DUAL |
| 2 | IO_L26P_2/D2 | Y15 | DUAL |
| 2 | IO_L27N_2 | T15 | I/O |
| 2 | IO_L27P_2 | U15 | I/O |
| 2 | IO_L28N_2 | W16 | I/O |

*Table 80:* **Spartan-3A FG400 Pinout*(Continued)***

| Bank | Pin Name | FG400 Ball | Type |
|---|---|---|---|
| 2 | IO_L28P_2 | Y16 | I/O |
| 2 | IO_L29N_2 | U16 | I/O |
| 2 | IO_L29P_2 | V16 | I/O |
| 2 | IO_L30N_2 | Y18 | I/O |
| 2 | IO_L30P_2 | Y17 | I/O |
| 2 | IO_L31N_2 | U17 | I/O |
| 2 | IO_L31P_2 | V17 | I/O |
| 2 | IO_L32N_2/CCLK | Y19 | DUAL |
| 2 | IO_L32P_2/D0/DIN/MISO | W18 | DUAL |
| 2 | IP_2 | P9 | INPUT |
| 2 | IP_2 | P12 | INPUT |
| 2 | IP_2 | P13 | INPUT |
| 2 | IP_2 | R8 | INPUT |
| 2 | IP_2 | R10 | INPUT |
| 2 | IP_2 | T11 | INPUT |
| 2 | IP_2/VREF_2 | N9 | VREF |
| 2 | IP_2/VREF_2 | N12 | VREF |
| 2 | IP_2/VREF_2 | P8 | VREF |
| 2 | IP_2/VREF_2 | P10 | VREF |
| 2 | IP_2/VREF_2 | P11 | VREF |
| 2 | IP_2/VREF_2 | R14 | VREF |
| 2 | VCCO_2 | R11 | VCCO |
| 2 | VCCO_2 | U8 | VCCO |
| 2 | VCCO_2 | U14 | VCCO |
| 2 | VCCO_2 | W5 | VCCO |
| 2 | VCCO_2 | W11 | VCCO |
| 2 | VCCO_2 | W17 | VCCO |
| 3 | IO_L01N_3 | D3 | I/O |
| 3 | IO_L01P_3 | D4 | I/O |
| 3 | IO_L02N_3 | C2 | I/O |
| 3 | IO_L02P_3 | B1 | I/O |
| 3 | IO_L03N_3 | D2 | I/O |
| 3 | IO_L03P_3 | C1 | I/O |
| 3 | IO_L05N_3 | E1 | I/O |
| 3 | IO_L05P_3 | D1 | I/O |
| 3 | IO_L06N_3 | G5 | I/O |
| 3 | IO_L06P_3 | F4 | I/O |
| 3 | IO_L07N_3 | J5 | I/O |
| 3 | IO_L07P_3 | J6 | I/O |
| 3 | IO_L08N_3 | H4 | I/O |

*Table 80:* **Spartan-3A FG400 Pinout*(Continued)***

| Bank | Pin Name | FG400 Ball | Type |
|---|---|---|---|
| 3 | IO_L08P_3 | H6 | I/O |
| 3 | IO_L09N_3 | G4 | I/O |
| 3 | IO_L09P_3 | F3 | I/O |
| 3 | IO_L10N_3 | F2 | I/O |
| 3 | IO_L10P_3 | E3 | I/O |
| 3 | IO_L12N_3 | H2 | I/O |
| 3 | IO_L12P_3 | G3 | I/O |
| 3 | IO_L13N_3/VREF_3 | G1 | VREF |
| 3 | IO_L13P_3 | F1 | I/O |
| 3 | IO_L14N_3 | H3 | I/O |
| 3 | IO_L14P_3 | J4 | I/O |
| 3 | IO_L16N_3 | J2 | I/O |
| 3 | IO_L16P_3 | J3 | I/O |
| 3 | IO_L17N_3/LHCLK1 | K2 | LHCLK |
| 3 | IO_L17P_3/LHCLK0 | J1 | LHCLK |
| 3 | IO_L18N_3/IRDY2/LHCLK3 | L3 | LHCLK |
| 3 | IO_L18P_3/LHCLK2 | K3 | LHCLK |
| 3 | IO_L20N_3/LHCLK5 | L5 | LHCLK |
| 3 | IO_L20P_3/LHCLK4 | K4 | LHCLK |
| 3 | IO_L21N_3/LHCLK7 | M1 | LHCLK |
| 3 | IO_L21P_3/TRDY2/LHCLK6 | L1 | LHCLK |
| 3 | IO_L22N_3 | M3 | I/O |
| 3 | IO_L22P_3/VREF_3 | M2 | VREF |
| 3 | IO_L24N_3 | M5 | I/O |
| 3 | IO_L24P_3 | M4 | I/O |
| 3 | IO_L25N_3 | N2 | I/O |
| 3 | IO_L25P_3 | N1 | I/O |
| 3 | IO_L26N_3 | N4 | I/O |
| 3 | IO_L26P_3 | N3 | I/O |
| 3 | IO_L28N_3 | R1 | I/O |
| 3 | IO_L28P_3 | P1 | I/O |
| 3 | IO_L29N_3 | P4 | I/O |
| 3 | IO_L29P_3 | P3 | I/O |
| 3 | IO_L30N_3 | R3 | I/O |
| 3 | IO_L30P_3 | R2 | I/O |
| 3 | IO_L32N_3 | T2 | I/O |
| 3 | IO_L32P_3/VREF_3 | T1 | VREF |
| 3 | IO_L33N_3 | R4 | I/O |
| 3 | IO_L33P_3 | T3 | I/O |
| 3 | IO_L34N_3 | U3 | I/O |

*Table 80:* **Spartan-3A FG400 Pinout*(Continued)***

| Bank | Pin Name | FG400 Ball | Type |
|---|---|---|---|
| 3 | IO_L34P_3 | U1 | I/O |
| 3 | IO_L36N_3 | T4 | I/O |
| 3 | IO_L36P_3 | R5 | I/O |
| 3 | IO_L37N_3 | V2 | I/O |
| 3 | IO_L37P_3 | V1 | I/O |
| 3 | IO_L38N_3 | W2 | I/O |
| 3 | IO_L38P_3 | W1 | I/O |
| 3 | IP_3 | H7 | INPUT |
| 3 | IP_L04N_3/VREF_3 | G6 | VREF |
| 3 | IP_L04P_3 | G7 | INPUT |
| 3 | IP_L11N_3/VREF_3 | J7 | VREF |
| 3 | IP_L11P_3 | J8 | INPUT |
| 3 | IP_L15N_3 | K7 | INPUT |
| 3 | IP_L15P_3 | K8 | INPUT |
| 3 | IP_L19N_3 | K5 | INPUT |
| 3 | IP_L19P_3 | K6 | INPUT |
| 3 | IP_L23N_3 | L6 | INPUT |
| 3 | IP_L23P_3 | L7 | INPUT |
| 3 | IP_L27N_3 | M7 | INPUT |
| 3 | IP_L27P_3 | M8 | INPUT |
| 3 | IP_L31N_3 | N7 | INPUT |
| 3 | IP_L31P_3 | M6 | INPUT |
| 3 | IP_L35N_3 | N6 | INPUT |
| 3 | IP_L35P_3 | P5 | INPUT |
| 3 | IP_L39N_3/VREF_3 | P7 | VREF |
| 3 | IP_L39P_3 | P6 | INPUT |
| 3 | VCCO_3 | E2 | VCCO |
| 3 | VCCO_3 | H5 | VCCO |
| 3 | VCCO_3 | L2 | VCCO |
| 3 | VCCO_3 | N5 | VCCO |
| 3 | VCCO_3 | U2 | VCCO |
| GND | GND | A1 | GND |
| GND | GND | A11 | GND |
| GND | GND | A20 | GND |
| GND | GND | B6 | GND |
| GND | GND | B14 | GND |
| GND | GND | C3 | GND |
| GND | GND | C18 | GND |
| GND | GND | D9 | GND |
| GND | GND | E5 | GND |

*Table 80:* **Spartan-3A FG400 Pinout*(Continued)***

| Bank | Pin Name | FG400 Ball | Type |
|---|---|---|---|
| GND | GND | E12 | GND |
| GND | GND | F15 | GND |
| GND | GND | G2 | GND |
| GND | GND | G19 | GND |
| GND | GND | H8 | GND |
| GND | GND | H13 | GND |
| GND | GND | J9 | GND |
| GND | GND | J11 | GND |
| GND | GND | K1 | GND |
| GND | GND | K10 | GND |
| GND | GND | K12 | GND |
| GND | GND | K17 | GND |
| GND | GND | L4 | GND |
| GND | GND | L9 | GND |
| GND | GND | L11 | GND |
| GND | GND | L20 | GND |
| GND | GND | M10 | GND |
| GND | GND | M12 | GND |
| GND | GND | N8 | GND |
| GND | GND | N11 | GND |
| GND | GND | N13 | GND |
| GND | GND | P2 | GND |
| GND | GND | P19 | GND |
| GND | GND | R6 | GND |
| GND | GND | R9 | GND |
| GND | GND | T16 | GND |
| GND | GND | U12 | GND |
| GND | GND | V3 | GND |
| GND | GND | V18 | GND |
| GND | GND | W7 | GND |
| GND | GND | W15 | GND |
| GND | GND | Y1 | GND |
| GND | GND | Y10 | GND |
| GND | GND | Y20 | GND |
| VCCAUX | SUSPEND | R15 | PWR MGMT |
| VCCAUX | DONE | W19 | CONFIG |
| VCCAUX | PROG_B | D5 | CONFIG |
| VCCAUX | TCK | A19 | JTAG |
| VCCAUX | TDI | F5 | JTAG |

*Table 80:* **Spartan-3A FG400 Pinout*(Continued)***

| Bank | Pin Name | FG400 Ball | Type |
|---|---|---|---|
| VCCAUX | TDO | E17 | JTAG |
| VCCAUX | TMS | E4 | JTAG |
| VCCAUX | VCCAUX | A13 | VCCAUX |
| VCCAUX | VCCAUX | E16 | VCCAUX |
| VCCAUX | VCCAUX | H1 | VCCAUX |
| VCCAUX | VCCAUX | K13 | VCCAUX |
| VCCAUX | VCCAUX | L8 | VCCAUX |
| VCCAUX | VCCAUX | N20 | VCCAUX |
| VCCAUX | VCCAUX | T5 | VCCAUX |
| VCCAUX | VCCAUX | Y8 | VCCAUX |
| VCCINT | VCCINT | J10 | VCCINT |
| VCCINT | VCCINT | J12 | VCCINT |
| VCCINT | VCCINT | K9 | VCCINT |
| VCCINT | VCCINT | K11 | VCCINT |
| VCCINT | VCCINT | L10 | VCCINT |
| VCCINT | VCCINT | L12 | VCCINT |
| VCCINT | VCCINT | M9 | VCCINT |
| VCCINT | VCCINT | M11 | VCCINT |
| VCCINT | VCCINT | N10 | VCCINT |

## User I/Os by Bank

Table 81 indicates how the 311 available user-I/O pins are distributed between the four I/O banks on the FG400 package. The AWAKE pin is counted as a dual-purpose I/O.

*Table 81:* **User I/Os Per Bank for the XC3S400A and XC3S700A in the FG400 Package**

| Package Edge | I/O Bank | Maximum I/O | All Possible I/O Pins by Type | | | | |
|---|---|---|---|---|---|---|---|
| | | | I/O | INPUT | DUAL | VREF | CLK |
| Top | 0 | 77 | 50 | 12 | 1 | 6 | 8 |
| Right | 1 | 79 | 21 | 12 | 30 | 8 | 8 |
| Bottom | 2 | 76 | 35 | 6 | 21 | 6 | 8 |
| Left | 3 | 79 | 49 | 16 | 0 | 6 | 8 |
| **TOTAL** | | **311** | **155** | **46** | **52** | **26** | **32** |

## Footprint Migration Differences

The XC3S400A and XC3S700A FPGAs have identical footprints in the FG400 package. Designs can migrate between the XC3S400A and XC3S700A FPGAs without further consideration.

## FG400 Footprint

### Left Half of FG400 Package (Top View)

| | |
|---|---|
| 155 | **I/O:** Unrestricted, general-purpose user I/O |
| 46 | **INPUT:** Unrestricted, general-purpose input pin |
| 51 | **DUAL:** Configuration pins, then possible user I/O |
| 26 | **VREF:** User I/O or input voltage reference for bank |
| 32 | **CLK:** User I/O, input, or clock buffer input |
| 2 | **CONFIG:** Dedicated configuration pins |
| 4 | **JTAG:** Dedicated JTAG port pins |
| 2 | **SUSPEND:** Dedicated SUSPEND and dual-purpose AWAKE Power Management pins |
| 43 | **GND:** Ground |
| 22 | **VCCO:** Output voltage supply for bank |
| 9 | **VCCINT:** Internal core supply voltage (+1.2V) |
| 8 | **VCCAUX:** Auxiliary supply voltage |

Bank 0

| | 1 | 2 | 3 | 4 | 5 | 6 | 7 | 8 | 9 | 10 |
|---|---|---|---|---|---|---|---|---|---|---|
| A | GND | I/O L32P_0 VREF_0 | I/O L30P_0 | I/O L29P_0 | I/O L26P_0 | I/O L25P_0 | I/O L24N_0 | I/O L18N_0 GCLK11 | I/O L18P_0 GCLK10 | I/O L16P_0 GCLK6 |
| B | I/O L02P_3 | I/O L32N_0 PUDC_B | I/O L30N_0 | VCCO_0 | I/O L26N_0 | GND | I/O L24P_0 | I/O L20P_0 | I/O L19P_0 | VCCO_0 |
| C | I/O L03P_3 | I/O L02N_3 | GND | I/O L29N_0 | I/O L28P_0 | I/O L25N_0 | I/O L21P_0 | I/O L20N_0 | I/O L19N_0 | I/O L16N_0 GCLK7 |
| D | I/O L05P_3 | I/O L03N_3 | I/O L01N_3 | I/O L01P_3 | PROG_B | I/O L28N_0 | VCCO_0 | I/O L21N_0 | GND | I/O L17P_0 GCLK8 |
| E | I/O L05N_3 | VCCO_3 | I/O L10P_3 | TMS | GND | I/O L31P_0 | I/O L27P_0 | I/O L23P_0 | I/O L22P_0 | I/O L17N_0 GCLK9 |
| F | I/O L13P_3 | I/O L10N_3 | I/O L09P_3 | I/O L06P_3 | TDI | I/O L31N_0 | I/O L27N_0 | I/O L23N_0 | I/O L22N_0 VREF_0 | VCCO_0 |
| G | I/O L13N_3 VREF_3 | GND | I/O L12P_3 | I/O L09N_3 | I/O L06N_3 | INPUT L04N_3 VREF_3 | INPUT L04P_3 | INPUT | INPUT | INPUT |
| H | VCCAUX | I/O L12N_3 | I/O L14N_3 | I/O L08N_3 | VCCO_3 | I/O L08P_3 | INPUT | GND | INPUT | INPUT |
| J | I/O L17P_3 LHCLK0 | I/O L16N_3 | I/O L16P_3 | I/O L14P_3 | I/O L07N_3 | I/O L07P_3 | INPUT L11N_3 VREF_3 | INPUT L11P_3 | GND | VCCINT |
| K | GND | I/O L17N_3 LHCLK1 | I/O L18P_3 LHCLK2 | I/O L20P_3 LHCLK4 | INPUT L19N_3 | INPUT L19P_3 | INPUT L15N_3 | INPUT L15P_3 | VCCINT | GND |
| L | I/O L21P_3 TRDY2 LHCLK6 | VCCO_3 | I/O L18N_3 IRDY2 LHCLK3 | GND | I/O L20N_3 LHCLK5 | INPUT L23N_3 | INPUT L23P_3 | VCCAUX | GND | VCCINT |
| M | I/O L21N_3 LHCLK7 | I/O L22P_3 VREF_3 | I/O L22N_3 | I/O L24P_3 | I/O L24N_3 | INPUT L31P_3 | INPUT L27N_3 | INPUT L27P_3 | VCCINT | GND |
| N | I/O L25P_3 | I/O L25N_3 | I/O L26P_3 | I/O L26N_3 | VCCO_3 | INPUT L35N_3 | INPUT L31N_3 | GND | INPUT VREF_2 | VCCINT |
| P | I/O L28P_3 | GND | I/O L29P_3 | I/O L29N_3 | INPUT L35P_3 | INPUT L39P_3 | INPUT L39N_3 VREF_3 | INPUT VREF_2 | INPUT | INPUT VREF_2 |
| R | I/O L28N_3 | I/O L30P_3 | I/O L30N_3 | I/O L33N_3 | I/O L36P_3 | GND | I/O L04N_2 | INPUT | GND | INPUT |
| T | I/O L32P_3 VREF_3 | I/O L32N_3 | I/O L33P_3 | I/O L36N_3 | VCCAUX | I/O L04P_2 | I/O L06P_2 | I/O L07P_2 RDWR_B | I/O L11P_2 | I/O L14N_2 D4 |
| U | I/O L34P_3 | VCCO_3 | I/O L34N_3 | I/O L01P_2 M1 | I/O L05N_2 | I/O L06N_2 | I/O L07N_2 VS2 | VCCO_2 | I/O L11N_2 | I/O L14P_2 D5 |
| V | I/O L37P_3 | I/O L37N_3 | GND | I/O L01N_2 M0 | I/O L05P_2 | I/O L09P_2 VS1 | I/O L12P_2 D7 | I/O L13P_2 | I/O L13N_2 | I/O L16P_2 GCLK14 |
| W | I/O L38P_3 | I/O L38N_3 | I/O L02P_2 M2 | I/O L03N_2 | VCCO_2 | I/O L09N_2 VS0 | GND | I/O L12N_2 D6 | I/O L15P_2 GCLK12 | I/O L16N_2 GCLK15 |
| Y | GND | I/O L02N_2 CSO_B | I/O L03P_2 | I/O L08P_2 | I/O L08N_2 | I/O L10P_2 | I/O L10N_2 | VCCAUX | I/O L15N_2 GCLK13 | GND |

Bank 3

Bank 2

DS529-4_03_011608

*Figure 24:* **FG400 Package Footprint (Top View)**

## Right Half of FG400 Package (Top View)

Bank 0

| 11 | 12 | 13 | 14 | 15 | 16 | 17 | 18 | 19 | 20 | |
|---|---|---|---|---|---|---|---|---|---|---|
| GND | I/O L13N_0 | VCCAUX | I/O L07N_0 | I/O L08N_0 | I/O L05N_0 | I/O L04N_0 | I/O L01N_0 | TCK | GND | A |
| I/O L14P_0 | I/O L13P_0 | I/O L11P_0 | GND | I/O L08P_0 | VCCO_0 | I/O L04P_0 VREF_0 | I/O L01P_0 | I/O L38N_1 A25 | I/O L38P_1 A24 | B |
| I/O L14N_0 | I/O L11N_0 | I/O L10N_0 VREF_0 | I/O L07P_0 | I/O L06N_0 | I/O L05P_0 | I/O L02N_0 | GND | I/O L37N_1 A23 | I/O L37P_1 A22 | C |
| I/O L15P_0 GCLK4 | I/O L12P_0 | VCCO_0 | I/O L10P_0 | I/O L06P_0 | I/O L03P_0 | I/O L02P_0 VREF_0 | I/O L34N_1 | VCCO_1 | I/O L34P_1 | D |
| I/O L15N_0 GCLK5 | GND | I/O L09P_0 | INPUT | I/O L03N_0 | VCCAUX | TDO | I/O L33P_1 | I/O L32N_1 | I/O L32P_1 | E |
| INPUT | I/O L12N_0 | I/O L09N_0 | INPUT | GND | I/O L36N_1 A21 | I/O L33N_1 | I/O L30N_1 A19 | I/O L29N_1 A17 | I/O L29P_1 A16 | F |
| INPUT VREF_0 | INPUT | INPUT | INPUT L39N_1 | INPUT L39P_1 VREF_1 | I/O L36P_1 A20 | I/O L30P_1 A18 | I/O L28P_1 | GND | I/O L26N_1 A15 | G |
| INPUT | INPUT | GND | INPUT L35N_1 | INPUT L35P_1 | VCCO_1 | I/O L28N_1 | I/O L25N_1 A13 | I/O L25P_1 A12 | I/O L26P_1 A14 | H |
| GND | VCCINT | INPUT L31N_1 | INPUT L31P_1 VREF_1 | INPUT L27N_1 | INPUT L27P_1 | I/O L24P_1 | I/O L22N_1 A11 | I/O L22P_1 A10 | I/O L21N_1 RHCLK7 | J |
| VCCINT | GND | VCCAUX | INPUT L23N_1 | INPUT L23P_1 VREF_1 | I/O L24N_1 | GND | I/O L20P_1 RHCLK4 | VCCO_1 | I/O L21P_1 IRDY1 RHCLK6 | K |
| GND | VCCINT | INPUT L19N_1 | INPUT L19P_1 | I/O L16P_1 A8 | I/O L16N_1 A9 | I/O L20N_1 RHCLK5 | I/O L18N_1 TRDY1 RHCLK3 | I/O L18P_1 RHCLK2 | GND | L |
| VCCINT | GND | INPUT L15N_1 | INPUT L15P_1 VREF_1 | INPUT L11N_1 VREF_1 | INPUT L11P_1 | I/O L14P_1 A6 | I/O L14N_1 A7 | I/O L17P_1 RHCLK0 | I/O L17N_1 RHCLK1 | M |
| GND | INPUT VREF_2 | GND | INPUT VREF_1 | I/O L12P_1 A2 | VCCO_1 | I/O L12N_1 A3 | I/O L13P_1 A4 | I/O L13N_1 A5 | VCCAUX | N |
| INPUT VREF_2 | INPUT | INPUT | INPUT L04P_1 | INPUT L04N_1 VREF_1 | I/O L07P_1 | I/O L07N_1 | I/O L10P_1 | GND | I/O L10N_1 VREF_1 | P |
| VCCO_2 | I/O L19N_2 | I/O L23N_2 | INPUT VREF_2 | SUSPEND | I/O L03N_1 A1 | I/O L08N_1 | I/O L08P_1 | I/O L09P_1 | I/O L09N_1 | R |
| INPUT | I/O L19P_2 | I/O L23P_2 | I/O L25N_2 | I/O L27N_2 | GND | I/O L03P_1 A0 | I/O L05P_1 | VCCO_1 | I/O L05N_1 | T |
| I/O L18P_2 GCLK2 | GND | I/O L22P_2 AWAKE | VCCO_2 | I/O L27P_2 | I/O L29N_2 | I/O L31N_2 | I/O L02N_1 LDC0 | I/O L06P_1 | I/O L06N_1 | U |
| I/O L17N_2 GCLK1 | I/O L18N_2 GCLK3 | I/O L22N_2 DOUT | I/O L25P_2 | I/O L26N_2 D1 | I/O L29P_2 | I/O L31P_2 | GND | I/O L02P_1 LDC1 | I/O L01N_1 LDC2 | V |
| VCCO_2 | I/O L20N_2 MOSI CSI_B | I/O L21N_2 | I/O L24N_2 D3 | GND | I/O L28N_2 | VCCO_2 | I/O L32P_2 D0 DIN/MISO | DONE | I/O L01P_1 HDC | W |
| I/O L17P_2 GCLK0 | I/O L20P_2 | I/O L21P_2 | I/O L24P_2 INIT_B | I/O L26P_2 D2 | I/O L28P_2 | I/O L30P_2 | I/O L30N_2 | I/O L32N_2 CCLK | GND | Y |

Bank 1

Bank 2

DS529-4_04_012009

## FG484: 484-ball Fine-pitch Ball Grid Array

The 484-ball fine-pitch ball grid array, FG484, supports both the XC3S700A and the XC3S1400A FPGAs. There are three pinout differences, as described in Table 85.

Table 82 lists all the FG484 package pins. They are sorted by bank number and then by pin name. Pairs of pins that form a differential I/O pair appear together in the table. The table also shows the pin number for each pin and the pin type, as defined earlier.

The shaded rows indicate pinout differences between the XC3S700A and the XC3S1400A FPGAs. The XC3S700A has three unconnected balls, indicated as N.C. (No Connection) in Table 82 and with the black diamond character (◆) in Table 82 and Figure 25.

An electronic version of this package pinout table and footprint diagram is available for download from the Xilinx website at

www.xilinx.com/support/documentation/data_sheets/s3a_pin.zip.

### Pinout Table

*Table 82:* **Spartan-3A FG484 Pinout**

| Bank | Pin Name | FG484 Ball | Type |
|---|---|---|---|
| 0 | IO_L01N_0 | D18 | I/O |
| 0 | IO_L01P_0 | E17 | I/O |
| 0 | IO_L02N_0 | C19 | I/O |
| 0 | IO_L02P_0/VREF_0 | D19 | VREF |
| 0 | IO_L03N_0 | A20 | I/O |
| 0 | IO_L03P_0 | B20 | I/O |
| 0 | IO_L04N_0 | F15 | I/O |
| 0 | IO_L04P_0 | E15 | I/O |
| 0 | IO_L05N_0 | A18 | I/O |
| 0 | IO_L05P_0 | C18 | I/O |
| 0 | IO_L06N_0 | A19 | I/O |
| 0 | IO_L06P_0/VREF_0 | B19 | VREF |
| 0 | IO_L07N_0 | C17 | I/O |
| 0 | IO_L07P_0 | D17 | I/O |
| 0 | IO_L08N_0 | C16 | I/O |
| 0 | IO_L08P_0 | D16 | I/O |
| 0 | IO_L09N_0 | E14 | I/O |
| 0 | IO_L09P_0 | C14 | I/O |
| 0 | IO_L10N_0 | A17 | I/O |
| 0 | IO_L10P_0 | B17 | I/O |
| 0 | IO_L11N_0 | C15 | I/O |

*Table 82:* **Spartan-3A FG484 Pinout*(Continued)***

| Bank | Pin Name | FG484 Ball | Type |
|---|---|---|---|
| 0 | IO_L11P_0 | D15 | I/O |
| 0 | IO_L12N_0/VREF_0 | A15 | VREF |
| 0 | IO_L12P_0 | A16 | I/O |
| 0 | IO_L13N_0 | A14 | I/O |
| 0 | IO_L13P_0 | B15 | I/O |
| 0 | IO_L14N_0 | E13 | I/O |
| 0 | IO_L14P_0 | F13 | I/O |
| 0 | IO_L15N_0 | C13 | I/O |
| 0 | IO_L15P_0 | D13 | I/O |
| 0 | IO_L16N_0 | A13 | I/O |
| 0 | IO_L16P_0 | B13 | I/O |
| 0 | IO_L17N_0/GCLK5 | E12 | GCLK |
| 0 | IO_L17P_0/GCLK4 | C12 | GCLK |
| 0 | IO_L18N_0/GCLK7 | A11 | GCLK |
| 0 | IO_L18P_0/GCLK6 | A12 | GCLK |
| 0 | IO_L19N_0/GCLK9 | C11 | GCLK |
| 0 | IO_L19P_0/GCLK8 | B11 | GCLK |
| 0 | IO_L20N_0/GCLK11 | E11 | GCLK |
| 0 | IO_L20P_0/GCLK10 | D11 | GCLK |
| 0 | IO_L21N_0 | C10 | I/O |
| 0 | IO_L21P_0 | A10 | I/O |
| 0 | IO_L22N_0 | A8 | I/O |
| 0 | IO_L22P_0 | A9 | I/O |
| 0 | IO_L23N_0 | E10 | I/O |
| 0 | IO_L23P_0 | D10 | I/O |
| 0 | IO_L24N_0/VREF_0 | C9 | VREF |
| 0 | IO_L24P_0 | B9 | I/O |
| 0 | IO_L25N_0 | C8 | I/O |
| 0 | IO_L25P_0 | B8 | I/O |
| 0 | IO_L26N_0 | A6 | I/O |
| 0 | IO_L26P_0 | A7 | I/O |
| 0 | IO_L27N_0 | C7 | I/O |
| 0 | IO_L27P_0 | D7 | I/O |
| 0 | IO_L28N_0 | A5 | I/O |
| 0 | IO_L28P_0 | B6 | I/O |
| 0 | IO_L29N_0 | D6 | I/O |
| 0 | IO_L29P_0 | C6 | I/O |
| 0 | IO_L30N_0 | D8 | I/O |

*Table 82:* **Spartan-3A FG484 Pinout*(Continued)***

| Bank | Pin Name | FG484 Ball | Type |
|---|---|---|---|
| 0 | IO_L30P_0 | E9 | I/O |
| 0 | IO_L31N_0 | B4 | I/O |
| 0 | IO_L31P_0 | A4 | I/O |
| 0 | IO_L32N_0 | D5 | I/O |
| 0 | IO_L32P_0 | C5 | I/O |
| 0 | IO_L33N_0 | B3 | I/O |
| 0 | IO_L33P_0 | A3 | I/O |
| 0 | IO_L34N_0 | F8 | I/O |
| 0 | IO_L34P_0 | E7 | I/O |
| 0 | IO_L35N_0 | E6 | I/O |
| 0 | IO_L35P_0 | F7 | I/O |
| 0 | IO_L36N_0/PUDC_B | A2 | DUAL |
| 0 | IO_L36P_0/VREF_0 | B2 | VREF |
| 0 | IP_0 | E16 | INPUT |
| 0 | IP_0 | E8 | INPUT |
| 0 | IP_0 | F10 | INPUT |
| 0 | IP_0 | F12 | INPUT |
| 0 | IP_0 | F16 | INPUT |
| 0 | IP_0 | G10 | INPUT |
| 0 | IP_0 | G11 | INPUT |
| 0 | IP_0 | G12 | INPUT |
| 0 | IP_0 | G13 | INPUT |
| 0 | IP_0 | G14 | INPUT |
| 0 | IP_0 | G15 | INPUT |
| 0 | IP_0 | G16 | INPUT |
| 0 | IP_0 | G7 | INPUT |
| 0 | IP_0 | G9 | INPUT |
| 0 | IP_0 | H10 | INPUT |
| 0 | IP_0 | H13 | INPUT |
| 0 | IP_0 | H14 | INPUT |
| 0 | IP_0/VREF_0 | G8 | VREF |
| 0 | IP_0/VREF_0 | H12 | VREF |
| 0 | IP_0/VREF_0 | H9 | VREF |
| 0 | VCCO_0 | B10 | VCCO |
| 0 | VCCO_0 | B14 | VCCO |
| 0 | VCCO_0 | B18 | VCCO |
| 0 | VCCO_0 | B5 | VCCO |
| 0 | VCCO_0 | F14 | VCCO |
| 0 | VCCO_0 | F9 | VCCO |
| 1 | IO_L01N_1/LDC2 | Y21 | DUAL |

*Table 82:* **Spartan-3A FG484 Pinout*(Continued)***

| Bank | Pin Name | FG484 Ball | Type |
|---|---|---|---|
| 1 | IO_L01P_1/HDC | AA22 | DUAL |
| 1 | IO_L02N_1/LDC0 | W20 | DUAL |
| 1 | IO_L02P_1/LDC1 | W19 | DUAL |
| 1 | IO_L03N_1/A1 | T18 | DUAL |
| 1 | IO_L03P_1/A0 | T17 | DUAL |
| 1 | IO_L05N_1 | W21 | I/O |
| 1 | IO_L05P_1 | Y22 | I/O |
| 1 | IO_L06N_1 | V20 | I/O |
| 1 | IO_L06P_1 | V19 | I/O |
| 1 | IO_L07N_1 | V22 | I/O |
| 1 | IO_L07P_1 | W22 | I/O |
| 1 | IO_L09N_1 | U21 | I/O |
| 1 | IO_L09P_1 | U22 | I/O |
| 1 | IO_L10N_1 | U19 | I/O |
| 1 | IO_L10P_1 | U20 | I/O |
| 1 | IO_L11N_1 | T22 | I/O |
| 1 | IO_L11P_1 | T20 | I/O |
| 1 | IO_L13N_1 | T19 | I/O |
| 1 | IO_L13P_1 | R20 | I/O |
| 1 | IO_L14N_1 | R22 | I/O |
| 1 | IO_L14P_1 | R21 | I/O |
| 1 | IO_L15N_1/VREF_1 | P22 | VREF |
| 1 | IO_L15P_1 | P20 | I/O |
| 1 | IO_L17N_1/A3 | P18 | DUAL |
| 1 | IO_L17P_1/A2 | R19 | DUAL |
| 1 | IO_L18N_1/A5 | N21 | DUAL |
| 1 | IO_L18P_1/A4 | N22 | DUAL |
| 1 | IO_L19N_1/A7 | N19 | DUAL |
| 1 | IO_L19P_1/A6 | N20 | DUAL |
| 1 | IO_L20N_1/A9 | N17 | DUAL |
| 1 | IO_L20P_1/A8 | N18 | DUAL |
| 1 | IO_L21N_1/RHCLK1 | L22 | RHCLK |
| 1 | IO_L21P_1/RHCLK0 | M22 | RHCLK |
| 1 | IO_L22N_1/TRDY1/RHCLK3 | L20 | RHCLK |
| 1 | IO_L22P_1/RHCLK2 | L21 | RHCLK |
| 1 | IO_L24N_1/RHCLK5 | M20 | RHCLK |
| 1 | IO_L24P_1/RHCLK4 | M18 | RHCLK |
| 1 | IO_L25N_1/RHCLK7 | K19 | RHCLK |
| 1 | IO_L25P_1/IRDY1/RHCLK6 | K20 | RHCLK |
| 1 | IO_L26N_1/A11 | J22 | DUAL |

*Table 82:* **Spartan-3A FG484 Pinout*(Continued)***

| Bank | Pin Name | FG484 Ball | Type |
|---|---|---|---|
| 1 | IO_L26P_1/A10 | K22 | DUAL |
| 1 | IO_L28N_1 | L19 | I/O |
| 1 | IO_L28P_1 | L18 | I/O |
| 1 | IO_L29N_1/A13 | J20 | DUAL |
| 1 | IO_L29P_1/A12 | J21 | DUAL |
| 1 | IO_L30N_1/A15 | G22 | DUAL |
| 1 | IO_L30P_1/A14 | H22 | DUAL |
| 1 | IO_L32N_1 | K18 | I/O |
| 1 | IO_L32P_1 | K17 | I/O |
| 1 | IO_L33N_1/A17 | H20 | DUAL |
| 1 | IO_L33P_1/A16 | H21 | DUAL |
| 1 | IO_L34N_1/A19 | F21 | DUAL |
| 1 | IO_L34P_1/A18 | F22 | DUAL |
| 1 | IO_L36N_1 | G20 | I/O |
| 1 | IO_L36P_1 | G19 | I/O |
| 1 | IO_L37N_1 | H19 | I/O |
| 1 | IO_L37P_1 | J18 | I/O |
| 1 | IO_L38N_1 | F20 | I/O |
| 1 | IO_L38P_1 | E20 | I/O |
| 1 | IO_L40N_1 | F18 | I/O |
| 1 | IO_L40P_1 | F19 | I/O |
| 1 | IO_L41N_1 | D22 | I/O |
| 1 | IO_L41P_1 | E22 | I/O |
| 1 | IO_L42N_1 | D20 | I/O |
| 1 | IO_L42P_1 | D21 | I/O |
| 1 | IO_L44N_1/A21 | C21 | DUAL |
| 1 | IO_L44P_1/A20 | C22 | DUAL |
| 1 | IO_L45N_1/A23 | B21 | DUAL |
| 1 | IO_L45P_1/A22 | B22 | DUAL |
| 1 | IO_L46N_1/A25 | G17 | DUAL |
| 1 | IO_L46P_1/A24 | G18 | DUAL |
| 1 | IP_L04N_1/VREF_1 | R16 | VREF |
| 1 | IP_L04P_1 | R15 | INPUT |
| 1 | IP_L08N_1 | P16 | INPUT |
| 1 | IP_L08P_1 | P15 | INPUT |
| 1 | IP_L12N_1/VREF_1 | R18 | VREF |
| 1 | IP_L12P_1 | R17 | INPUT |
| 1 | IP_L16N_1/VREF_1 | N16 | VREF |
| 1 | IP_L16P_1 | N15 | INPUT |
| 1 | IP_L23N_1 | M16 | INPUT |

*Table 82:* **Spartan-3A FG484 Pinout*(Continued)***

| Bank | Pin Name | FG484 Ball | Type |
|---|---|---|---|
| 1 | IP_L23P_1 | M17 | INPUT |
| 1 | IP_L27N_1 | L16 | INPUT |
| 1 | IP_L27P_1/VREF_1 | M15 | VREF |
| 1 | IP_L31N_1 | K16 | INPUT |
| 1 | IP_L31P_1 | L15 | INPUT |
| 1 | IP_L35N_1 | K15 | INPUT |
| 1 | IP_L35P_1/VREF_1 | K14 | VREF |
| 1 | IP_L39N_1 | H18 | INPUT |
| 1 | IP_L39P_1 | H17 | INPUT |
| 1 | IP_L43N_1/VREF_1 | J15 | VREF |
| 1 | IP_L43P_1 | J16 | INPUT |
| 1 | IP_L47N_1 | H15 | INPUT |
| 1 | IP_L47P_1/VREF_1 | H16 | VREF |
| VCCAUX | SUSPEND | U18 | PWR MGMT |
| 1 | VCCO_1 | E21 | VCCO |
| 1 | VCCO_1 | J17 | VCCO |
| 1 | VCCO_1 | K21 | VCCO |
| 1 | VCCO_1 | P17 | VCCO |
| 1 | VCCO_1 | P21 | VCCO |
| 1 | VCCO_1 | V21 | VCCO |
| 2 | IO_L01N_2/M0 | W5 | DUAL |
| 2 | IO_L01P_2/M1 | V6 | DUAL |
| 2 | IO_L02N_2/CSO_B | Y4 | DUAL |
| 2 | IO_L02P_2/M2 | W4 | DUAL |
| 2 | IO_L03N_2 | AA3 | I/O |
| 2 | IO_L03P_2 | AB2 | I/O |
| 2 | IO_L04N_2 | AA4 | I/O |
| 2 | IO_L04P_2 | AB3 | I/O |
| 2 | IO_L05N_2 | Y5 | I/O |
| 2 | IO_L05P_2 | W6 | I/O |
| 2 | IO_L06N_2 | AB5 | I/O |
| 2 | IO_L06P_2 | AB4 | I/O |
| 2 | IO_L07N_2 | Y6 | I/O |
| 2 | IO_L07P_2 | W7 | I/O |
| 2 | IO_L08N_2 | AB6 | I/O |
| 2 | IO_L08P_2 | AA6 | I/O |
| 2 | IO_L09N_2/VS2 | W9 | DUAL |
| 2 | IO_L09P_2/RDWR_B | V9 | DUAL |
| 2 | IO_L10N_2 | AB7 | I/O |

*Table 82:* **Spartan-3A FG484 Pinout*(Continued)***

| Bank | Pin Name | FG484 Ball | Type |
|---|---|---|---|
| 2 | IO_L10P_2 | Y7 | I/O |
| 2 | IO_L11N_2/VS0 | Y8 | DUAL |
| 2 | IO_L11P_2/VS1 | W8 | DUAL |
| 2 | IO_L12N_2 | AB8 | I/O |
| 2 | IO_L12P_2 | AA8 | I/O |
| 2 | IO_L13N_2 | Y10 | I/O |
| 2 | IO_L13P_2 | V10 | I/O |
| 2 | IO_L14N_2/D6 | AB9 | DUAL |
| 2 | IO_L14P_2/D7 | Y9 | DUAL |
| 2 | IO_L15N_2 | AB10 | I/O |
| 2 | IO_L15P_2 | AA10 | I/O |
| 2 | IO_L16N_2/D4 | AB11 | DUAL |
| 2 | IO_L16P_2/D5 | Y11 | DUAL |
| 2 | IO_L17N_2/GCLK13 | V11 | GCLK |
| 2 | IO_L17P_2/GCLK12 | U11 | GCLK |
| 2 | IO_L18N_2/GCLK15 | Y12 | GCLK |
| 2 | IO_L18P_2/GCLK14 | W12 | GCLK |
| 2 | IO_L19N_2/GCLK1 | AB12 | GCLK |
| 2 | IO_L19P_2/GCLK0 | AA12 | GCLK |
| 2 | IO_L20N_2/GCLK3 | U12 | GCLK |
| 2 | IO_L20P_2/GCLK2 | V12 | GCLK |
| 2 | IO_L21N_2 | Y13 | I/O |
| 2 | IO_L21P_2 | AB13 | I/O |
| 2 | IO_L22N_2/MOSI/CSI_B | AB14 | DUAL |
| 2 | IO_L22P_2 | AA14 | I/O |
| 2 | IO_L23N_2 | Y14 | I/O |
| 2 | IO_L23P_2 | W13 | I/O |
| 2 | IO_L24N_2/ DOUT | AA15 | DUAL |
| 2 | IO_L24P_2/AWAKE | AB15 | PWR MGMT |
| 2 | IO_L25N_2 | Y15 | I/O |
| 2 | IO_L25P_2 | W15 | I/O |
| 2 | IO_L26N_2/D3 | U13 | DUAL |
| 2 | IO_L26P_2/INIT_B | V13 | DUAL |
| 2 | IO_L27N_2 | Y16 | I/O |
| 2 | IO_L27P_2 | AB16 | I/O |
| 2 | IO_L28N_2/D1 | Y17 | DUAL |
| 2 | IO_L28P_2/D2 | AA17 | DUAL |
| 2 | IO_L29N_2 | AB18 | I/O |
| 2 | IO_L29P_2 | AB17 | I/O |

*Table 82:* **Spartan-3A FG484 Pinout*(Continued)***

| Bank | Pin Name | FG484 Ball | Type |
|---|---|---|---|
| 2 | IO_L30N_2 | V15 | I/O |
| 2 | IO_L30P_2 | V14 | I/O |
| 2 | IO_L31N_2 | V16 | I/O |
| 2 | IO_L31P_2 | W16 | I/O |
| 2 | IO_L32N_2 | AA19 | I/O |
| 2 | IO_L32P_2 | AB19 | I/O |
| 2 | IO_L33N_2 | V17 | I/O |
| 2 | IO_L33P_2 | W18 | I/O |
| 2 | IO_L34N_2 | W17 | I/O |
| 2 | IO_L34P_2 | Y18 | I/O |
| 2 | IO_L35N_2 | AA21 | I/O |
| 2 | IO_L35P_2 | AB21 | I/O |
| 2 | IO_L36N_2/CCLK | AA20 | DUAL |
| 2 | IO_L36P_2/D0/DIN/MISO | AB20 | DUAL |
| 2 | IP_2 | P12 | INPUT |
| 2 | IP_2 | R10 | INPUT |
| 2 | IP_2 | R11 | INPUT |
| 2 | IP_2 | R9 | INPUT |
| 2 | IP_2 | T13 | INPUT |
| 2 | IP_2 | T14 | INPUT |
| 2 | IP_2 | T9 | INPUT |
| 2 | IP_2 | U10 | INPUT |
| 2 | IP_2 | U15 | INPUT |
| 2 | ***XC3S1400A:*** IP_2<br>***XC3S700A:*** N.C. (◆) | U16 | INPUT |
| 2 | ***XC3S1400A:*** IP_2<br>***XC3S700A:*** N.C. (◆) | U7 | INPUT |
| 2 | IP_2 | U8 | INPUT |
| 2 | IP_2 | V7 | INPUT |
| 2 | IP_2/VREF_2 | R12 | VREF |
| 2 | IP_2/VREF_2 | R13 | VREF |
| 2 | IP_2/VREF_2 | R14 | VREF |
| 2 | IP_2/VREF_2 | T10 | VREF |
| 2 | IP_2/VREF_2 | T11 | VREF |
| 2 | IP_2/VREF_2 | T15 | VREF |
| 2 | IP_2/VREF_2 | T16 | VREF |
| 2 | IP_2/VREF_2 | T7 | VREF |
| 2 | ***XC3S1400A:*** IP_2/VREF_2<br>***XC3S700A:*** N.C. (◆) | T8 | VREF |
| 2 | IP_2/VREF_2 | V8 | VREF |
| 2 | VCCO_2 | AA13 | VCCO |

*Table 82:* **Spartan-3A FG484 Pinout*(Continued)***

| Bank | Pin Name | FG484 Ball | Type |
|---|---|---|---|
| 2 | VCCO_2 | AA18 | VCCO |
| 2 | VCCO_2 | AA5 | VCCO |
| 2 | VCCO_2 | AA9 | VCCO |
| 2 | VCCO_2 | U14 | VCCO |
| 2 | VCCO_2 | U9 | VCCO |
| 3 | IO_L01N_3 | D2 | I/O |
| 3 | IO_L01P_3 | C1 | I/O |
| 3 | IO_L02N_3 | C2 | I/O |
| 3 | IO_L02P_3 | B1 | I/O |
| 3 | IO_L03N_3 | E4 | I/O |
| 3 | IO_L03P_3 | D3 | I/O |
| 3 | IO_L05N_3 | G5 | I/O |
| 3 | IO_L05P_3 | G6 | I/O |
| 3 | IO_L06N_3 | E1 | I/O |
| 3 | IO_L06P_3 | D1 | I/O |
| 3 | IO_L07N_3 | E3 | I/O |
| 3 | IO_L07P_3 | F4 | I/O |
| 3 | IO_L08N_3 | G4 | I/O |
| 3 | IO_L08P_3 | F3 | I/O |
| 3 | IO_L09N_3 | H6 | I/O |
| 3 | IO_L09P_3 | H5 | I/O |
| 3 | IO_L10N_3 | J5 | I/O |
| 3 | IO_L10P_3 | K6 | I/O |
| 3 | IO_L12N_3 | F1 | I/O |
| 3 | IO_L12P_3 | F2 | I/O |
| 3 | IO_L13N_3 | G1 | I/O |
| 3 | IO_L13P_3 | G3 | I/O |
| 3 | IO_L14N_3 | H3 | I/O |
| 3 | IO_L14P_3 | H4 | I/O |
| 3 | IO_L16N_3 | H1 | I/O |
| 3 | IO_L16P_3 | H2 | I/O |
| 3 | IO_L17N_3/VREF_3 | J1 | VREF |
| 3 | IO_L17P_3 | J3 | I/O |
| 3 | IO_L18N_3 | K4 | I/O |
| 3 | IO_L18P_3 | K5 | I/O |
| 3 | IO_L20N_3 | K2 | I/O |
| 3 | IO_L20P_3 | K3 | I/O |
| 3 | IO_L21N_3/LHCLK1 | L3 | LHCLK |
| 3 | IO_L21P_3/LHCLK0 | L5 | LHCLK |
| 3 | IO_L22N_3/IRDY2/LHCLK3 | L1 | LHCLK |

*Table 82:* **Spartan-3A FG484 Pinout*(Continued)***

| Bank | Pin Name | FG484 Ball | Type |
|---|---|---|---|
| 3 | IO_L22P_3/LHCLK2 | K1 | LHCLK |
| 3 | IO_L24N_3/LHCLK5 | M2 | LHCLK |
| 3 | IO_L24P_3/LHCLK4 | M1 | LHCLK |
| 3 | IO_L25N_3/LHCLK7 | M4 | LHCLK |
| 3 | IO_L25P_3/TRDY2/LHCLK6 | M3 | LHCLK |
| 3 | IO_L26N_3 | N3 | I/O |
| 3 | IO_L26P_3/VREF_3 | N1 | VREF |
| 3 | IO_L28N_3 | P2 | I/O |
| 3 | IO_L28P_3 | P1 | I/O |
| 3 | IO_L29N_3 | P5 | I/O |
| 3 | IO_L29P_3 | P3 | I/O |
| 3 | IO_L30N_3 | N4 | I/O |
| 3 | IO_L30P_3 | M5 | I/O |
| 3 | IO_L32N_3 | R2 | I/O |
| 3 | IO_L32P_3 | R1 | I/O |
| 3 | IO_L33N_3 | R4 | I/O |
| 3 | IO_L33P_3 | R3 | I/O |
| 3 | IO_L34N_3 | T4 | I/O |
| 3 | IO_L34P_3 | R5 | I/O |
| 3 | IO_L36N_3 | T3 | I/O |
| 3 | IO_L36P_3/VREF_3 | T1 | VREF |
| 3 | IO_L37N_3 | U2 | I/O |
| 3 | IO_L37P_3 | U1 | I/O |
| 3 | IO_L38N_3 | V3 | I/O |
| 3 | IO_L38P_3 | V1 | I/O |
| 3 | IO_L40N_3 | U5 | I/O |
| 3 | IO_L40P_3 | T5 | I/O |
| 3 | IO_L41N_3 | U4 | I/O |
| 3 | IO_L41P_3 | U3 | I/O |
| 3 | IO_L42N_3 | W2 | I/O |
| 3 | IO_L42P_3 | W1 | I/O |
| 3 | IO_L43N_3 | W3 | I/O |
| 3 | IO_L43P_3 | V4 | I/O |
| 3 | IO_L44N_3 | Y2 | I/O |
| 3 | IO_L44P_3 | Y1 | I/O |
| 3 | IO_L45N_3 | AA2 | I/O |
| 3 | IO_L45P_3 | AA1 | I/O |
| 3 | IP_3/VREF_3 | J8 | VREF |
| 3 | IP_3/VREF_3 | R6 | VREF |
| 3 | IP_L04N_3/VREF_3 | H7 | VREF |

*Table 82:* **Spartan-3A FG484 Pinout*(Continued)***

| Bank | Pin Name | FG484 Ball | Type |
|---|---|---|---|
| 3 | IP_L04P_3 | H8 | INPUT |
| 3 | IP_L11N_3 | K8 | INPUT |
| 3 | IP_L11P_3 | J7 | INPUT |
| 3 | IP_L15N_3/VREF_3 | L8 | VREF |
| 3 | IP_L15P_3 | K7 | INPUT |
| 3 | IP_L19N_3 | M8 | INPUT |
| 3 | IP_L19P_3 | L7 | INPUT |
| 3 | IP_L23N_3 | M6 | INPUT |
| 3 | IP_L23P_3 | M7 | INPUT |
| 3 | IP_L27N_3 | N9 | INPUT |
| 3 | IP_L27P_3 | N8 | INPUT |
| 3 | IP_L31N_3 | N5 | INPUT |
| 3 | IP_L31P_3 | N6 | INPUT |
| 3 | IP_L35N_3 | P8 | INPUT |
| 3 | IP_L35P_3 | N7 | INPUT |
| 3 | IP_L39N_3 | R8 | INPUT |
| 3 | IP_L39P_3 | P7 | INPUT |
| 3 | IP_L46N_3/VREF_3 | T6 | VREF |
| 3 | IP_L46P_3 | R7 | INPUT |
| 3 | VCCO_3 | E2 | VCCO |
| 3 | VCCO_3 | J2 | VCCO |
| 3 | VCCO_3 | J6 | VCCO |
| 3 | VCCO_3 | N2 | VCCO |
| 3 | VCCO_3 | P6 | VCCO |
| 3 | VCCO_3 | V2 | VCCO |
| GND | GND | A1 | GND |
| GND | GND | A22 | GND |
| GND | GND | AA11 | GND |
| GND | GND | AA16 | GND |
| GND | GND | AA7 | GND |
| GND | GND | AB1 | GND |
| GND | GND | AB22 | GND |
| GND | GND | B12 | GND |
| GND | GND | B16 | GND |
| GND | GND | B7 | GND |
| GND | GND | C20 | GND |
| GND | GND | C3 | GND |
| GND | GND | D14 | GND |
| GND | GND | D9 | GND |
| GND | GND | F11 | GND |

*Table 82:* **Spartan-3A FG484 Pinout*(Continued)***

| Bank | Pin Name | FG484 Ball | Type |
|---|---|---|---|
| GND | GND | F17 | GND |
| GND | GND | F6 | GND |
| GND | GND | G2 | GND |
| GND | GND | G21 | GND |
| GND | GND | J11 | GND |
| GND | GND | J13 | GND |
| GND | GND | J14 | GND |
| GND | GND | J19 | GND |
| GND | GND | J4 | GND |
| GND | GND | J9 | GND |
| GND | GND | K10 | GND |
| GND | GND | K12 | GND |
| GND | GND | L11 | GND |
| GND | GND | L13 | GND |
| GND | GND | L17 | GND |
| GND | GND | L2 | GND |
| GND | GND | L6 | GND |
| GND | GND | L9 | GND |
| GND | GND | M10 | GND |
| GND | GND | M12 | GND |
| GND | GND | M14 | GND |
| GND | GND | M21 | GND |
| GND | GND | N11 | GND |
| GND | GND | N13 | GND |
| GND | GND | P10 | GND |
| GND | GND | P14 | GND |
| GND | GND | P19 | GND |
| GND | GND | P4 | GND |
| GND | GND | P9 | GND |
| GND | GND | T12 | GND |
| GND | GND | T2 | GND |
| GND | GND | T21 | GND |
| GND | GND | U17 | GND |
| GND | GND | U6 | GND |
| GND | GND | W10 | GND |
| GND | GND | W14 | GND |
| GND | GND | Y20 | GND |
| GND | GND | Y3 | GND |
| VCCAUX | SUSPEND | U18 | PWR MGMT |

*Table 82:* **Spartan-3A FG484 Pinout*(Continued)***

| Bank | Pin Name | FG484 Ball | Type |
|---|---|---|---|
| VCCAUX | DONE | Y19 | CONFIG |
| VCCAUX | PROG_B | C4 | CONFIG |
| VCCAUX | TCK | A21 | JTAG |
| VCCAUX | TDI | F5 | JTAG |
| VCCAUX | TDO | E19 | JTAG |
| VCCAUX | TMS | D4 | JTAG |
| VCCAUX | VCCAUX | D12 | VCCAUX |
| VCCAUX | VCCAUX | E18 | VCCAUX |
| VCCAUX | VCCAUX | E5 | VCCAUX |
| VCCAUX | VCCAUX | H11 | VCCAUX |
| VCCAUX | VCCAUX | L4 | VCCAUX |
| VCCAUX | VCCAUX | M19 | VCCAUX |
| VCCAUX | VCCAUX | P11 | VCCAUX |
| VCCAUX | VCCAUX | V18 | VCCAUX |
| VCCAUX | VCCAUX | V5 | VCCAUX |
| VCCAUX | VCCAUX | W11 | VCCAUX |
| VCCINT | VCCINT | J10 | VCCINT |
| VCCINT | VCCINT | J12 | VCCINT |
| VCCINT | VCCINT | K11 | VCCINT |
| VCCINT | VCCINT | K13 | VCCINT |
| VCCINT | VCCINT | K9 | VCCINT |
| VCCINT | VCCINT | L10 | VCCINT |
| VCCINT | VCCINT | L12 | VCCINT |
| VCCINT | VCCINT | L14 | VCCINT |
| VCCINT | VCCINT | M11 | VCCINT |
| VCCINT | VCCINT | M13 | VCCINT |
| VCCINT | VCCINT | M9 | VCCINT |
| VCCINT | VCCINT | N10 | VCCINT |
| VCCINT | VCCINT | N12 | VCCINT |
| VCCINT | VCCINT | N14 | VCCINT |
| VCCINT | VCCINT | P13 | VCCINT |

## User I/Os by Bank

Table 83 and Table 84 indicate how the user-I/O pins are distributed between the four I/O banks on the FG484 package. The AWAKE pin is counted as a dual-purpose I/O.

*Table 83:* **User I/Os Per Bank for the XC3S700A in the FG484 Package**

| Package Edge | I/O Bank | Maximum I/O | All Possible I/O Pins by Type | | | | |
|---|---|---|---|---|---|---|---|
| | | | I/O | INPUT | DUAL | VREF | CLK |
| Top | 0 | 92 | 58 | 17 | 1 | 8 | 8 |
| Right | 1 | 94 | 33 | 15 | 30 | 8 | 8 |
| Bottom | 2 | 92 | 43 | 11 | 21 | 9 | 8 |
| Left | 3 | 94 | 61 | 17 | 0 | 8 | 8 |
| **TOTAL** | | **372** | **195** | **60** | **52** | **33** | **32** |

*Table 84:* **User I/Os Per Bank for the XC3S1400A in the FG484 Package**

| Package Edge | I/O Bank | Maximum I/O | All Possible I/O Pins by Type | | | | |
|---|---|---|---|---|---|---|---|
| | | | I/O | INPUT | DUAL | VREF | CLK |
| Top | 0 | 92 | 58 | 17 | 1 | 8 | 8 |
| Right | 1 | 94 | 33 | 15 | 30 | 8 | 8 |
| Bottom | 2 | 95 | 43 | 13 | 21 | 10 | 8 |
| Left | 3 | 94 | 61 | 17 | 0 | 8 | 8 |
| **TOTAL** | | **375** | **195** | **62** | **52** | **34** | **32** |

## Footprint Migration Differences

Table 85 summarizes any footprint and functionality differences between the XC3S700A and the XC3S1400A FPGAs that might affect easy migration between devices available in the FG484 package. There are three such balls. All other pins not listed in Table 85 unconditionally migrate between Spartan-3A devices available in the FG484 package.

The arrows indicate the direction for easy migration.

*Table 85:* **FG484 Footprint Migration Differences**

| Pin | Bank | XC3S700A | Migration | XC3S1400A |
|---|---|---|---|---|
| T8 | 2 | N.C. | → | INPUT/VREF |
| U7 | 2 | N.C. | → | INPUT |
| U16 | 2 | N.C. | → | INPUT |
| **DIFFERENCES** | | | **3** | |

Legend:

→ This pin can unconditionally migrate from the device on the left to the device on the right. Migration in the other direction is possible depending on how the pin is configured for the device on the right.

## FG484 Footprint

### Left Half of FG484 Package (Top View)

| | |
|---|---|
| 195 | **I/O:** Unrestricted, general-purpose user I/O |
| 60-62 | **INPUT:** Unrestricted, general-purpose input pin |
| 51 | **DUAL:** Configuration pins, then possible user I/O |
| 33-34 | **VREF:** User I/O or input voltage reference for bank |
| 32 | **CLK:** User I/O, input, or clock buffer input |
| 2 | **SUSPEND:** Dedicated SUSPEND and dual-purpose AWAKE Power Management pins |
| 2 | **CONFIG:** Dedicated configuration pins |
| 4 | **JTAG:** Dedicated JTAG port pins |
| 53 | **GND:** Ground |
| 24 | **VCCO:** Output voltage supply for bank |
| 15 | **VCCINT:** Internal core supply voltage (+1.2V) |
| 10 | **VCCAUX:** Auxiliary supply voltage |
| 3 ◆ | **N.C.:** Not connected (XC3S700A only) |

Bank 0

| | 1 | 2 | 3 | 4 | 5 | 6 | 7 | 8 | 9 | 10 | 11 |
|---|---|---|---|---|---|---|---|---|---|---|---|
| A | GND | I/O L36N_0 PUDC_B | I/O L33P_0 | I/O L31P_0 | I/O L28N_0 | I/O L26N_0 | I/O L26P_0 | I/O L22N_0 | I/O L22P_0 | I/O L21P_0 | I/O L18N_0 GCLK7 |
| B | I/O L02P_3 | I/O L36P_0 VREF_0 | I/O L33N_0 | I/O L31N_0 | VCCO_0 | I/O L28P_0 | GND | I/O L25P_0 | I/O L24P_0 | VCCO_0 | I/O L19P_0 GCLK8 |
| C | I/O L01P_3 | I/O L02N_3 | GND | PROG_B | I/O L32P_0 | I/O L29P_0 | I/O L27N_0 | I/O L25N_0 | I/O L24N_0 VREF_0 | I/O L21N_0 | I/O L19N_0 GCLK9 |
| D | I/O L06P_3 | I/O L01N_3 | I/O L03P_3 | TMS | I/O L32N_0 | I/O L29N_0 | I/O L27P_0 | I/O L30N_0 | GND | I/O L23P_0 | I/O L20P_0 GCLK10 |
| E | I/O L06N_3 | VCCO_3 | I/O L07N_3 | I/O L03N_3 | VCCAUX | I/O L35N_0 | I/O L34P_0 | INPUT | I/O L30P_0 | I/O L23N_0 | I/O L20N_0 GCLK11 |
| F | I/O L12N_3 | I/O L12P_3 | I/O L08P_3 | I/O L07P_3 | TDI | GND | I/O L35P_0 | I/O L34N_0 | VCCO_0 | INPUT | GND |
| G | I/O L13N_3 | GND | I/O L13P_3 | I/O L08N_3 | I/O L05N_3 | I/O L05P_3 | INPUT | INPUT VREF_0 | INPUT | INPUT | INPUT |
| H | I/O L16N_3 | I/O L16P_3 | I/O L14N_3 | I/O L14P_3 | I/O L09P_3 | I/O L09N_3 | INPUT L04N_3 VREF_3 | INPUT L04P_3 | INPUT VREF_0 | INPUT | VCCAUX |
| J | I/O L17N_3 VREF_3 | VCCO_3 | I/O L17P_3 | GND | I/O L10N_3 | VCCO_3 | INPUT L11P_3 | INPUT VREF_3 | GND | VCCINT | GND |
| K | I/O L22P_3 LHCLK2 | I/O L20N_3 | I/O L20P_3 | I/O L18N_3 | I/O L18P_3 | I/O L10P_3 | INPUT L15P_3 | INPUT L11N_3 | VCCINT | GND | VCCINT |
| L | I/O L22N_3 IRDY2 LHCLK3 | GND | I/O L21N_3 LHCLK1 | VCCAUX | I/O L21P_3 LHCLK0 | GND | INPUT L19P_3 | INPUT L15N_3 VREF_3 | GND | VCCINT | GND |
| M | I/O L24P_3 LHCLK4 | I/O L24N_3 LHCLK5 | I/O L25P_3 TRDY2 LHCLK6 | I/O L25N_3 LHCLK7 | I/O L30P_3 | INPUT L23N_3 | INPUT L23P_3 | INPUT L19N_3 | VCCINT | GND | VCCINT |
| N | I/O L26P_3 VREF_3 | VCCO_3 | I/O L26N_3 | I/O L30N_3 | INPUT L31N_3 | INPUT L31P_3 | INPUT L35P_3 | INPUT L27P_3 | INPUT L27N_3 | VCCINT | GND |
| P | I/O L28P_3 | I/O L28N_3 | I/O L29P_3 | GND | I/O L29N_3 | VCCO_3 | INPUT L39P_3 | INPUT L35N_3 | GND | GND | VCCAUX |
| R | I/O L32P_3 | I/O L32N_3 | I/O L33P_3 | I/O L33N_3 | I/O L34P_3 | INPUT VREF_3 | INPUT L46P_3 | INPUT L39N_3 | INPUT | INPUT | INPUT |
| T | I/O L36P_3 VREF_3 | GND | I/O L36N_3 | I/O L34N_3 | I/O L40P_3 | INPUT L46N_3 VREF_3 | INPUT VREF_2 | INPUT VREF_2 ◆ | INPUT | INPUT VREF_2 | INPUT VREF_2 |
| U | I/O L37P_3 | I/O L37N_3 | I/O L41P_3 | I/O L41N_3 | I/O L40N_3 | GND | INPUT ◆ | INPUT | VCCO_2 | INPUT | I/O L17P_2 GCLK12 |
| V | I/O L38P_3 | VCCO_3 | I/O L38N_3 | I/O L43P_3 | VCCAUX | I/O L01P_2 M1 | INPUT | INPUT VREF_2 | I/O L09P_2 RDWR_B | I/O L13P_2 | I/O L17N_2 GCLK13 |
| W | I/O L42P_3 | I/O L42N_3 | I/O L43N_3 | I/O L02P_2 M2 | I/O L01N_2 M0 | I/O L05P_2 | I/O L07P_2 | I/O L11P_2 VS1 | I/O L09N_2 VS2 | GND | VCCAUX |
| Y | I/O L44P_3 | I/O L44N_3 | GND | I/O L02N_2 CSO_B | I/O L05N_2 | I/O L07N_2 | I/O L10P_2 | I/O L11N_2 VS0 | I/O L14P_2 D7 | I/O L13N_2 | I/O L16P_2 D5 |
| AA | I/O L45P_3 | I/O L45N_3 | I/O L03N_2 | I/O L04N_2 | VCCO_2 | I/O L08P_2 | GND | I/O L12P_2 | VCCO_2 | I/O L15P_2 | GND |
| AB | GND | I/O L03P_2 | I/O L04P_2 | I/O L06P_2 | I/O L06N_2 | I/O L08N_2 | I/O L10N_2 | I/O L12N_2 | I/O L14N_2 D6 | I/O L15N_2 | I/O L16N_2 D4 |

Bank 3

Bank 2

DS529-4_01_101106

*Figure 25:* **FG484 Package Footprint (Top View)**

**Right Half of FG484 Package (Top View)**

Bank 0

| 12 | 13 | 14 | 15 | 16 | 17 | 18 | 19 | 20 | 21 | 22 | |
|---|---|---|---|---|---|---|---|---|---|---|---|
| I/O L18P_0 GCLK6 | I/O L16N_0 | I/O L13N_0 | I/O L12N_0 VREF_0 | I/O L12P_0 | I/O L10N_0 | I/O L05N_0 | I/O L06N_0 | I/O L03N_0 | TCK | GND | A |
| GND | I/O L16P_0 | VCCO_0 | I/O L13P_0 | GND | I/O L10P_0 | VCCO_0 | I/O L06P_0 VREF_0 | I/O L03P_0 | I/O L45N_1 A23 | I/O L45P_1 A22 | B |
| I/O L17P_0 GCLK4 | I/O L15N_0 | I/O L09P_0 | I/O L11N_0 | I/O L08N_0 | I/O L07N_0 | I/O L05P_0 | I/O L02N_0 | GND | I/O L44N_1 A21 | I/O L44P_1 A20 | C |
| VCCAUX | I/O L15P_0 | GND | I/O L11P_0 | I/O L08P_0 | I/O L07P_0 | I/O L01N_0 | I/O L02P_0 VREF_0 | I/O L42N_1 | I/O L42P_1 | I/O L41N_1 | D |
| I/O L17N_0 GCLK5 | I/O L14N_0 | I/O L09N_0 | I/O L04P_0 | INPUT | I/O L01P_0 | VCCAUX | TDO | I/O L38P_1 | VCCO_1 | I/O L41P_1 | E |
| INPUT | I/O L14P_0 | VCCO_0 | I/O L04N_0 | INPUT | GND | I/O L40N_1 | I/O L40P_1 | I/O L38N_1 | I/O L34N_1 A19 | I/O L34P_1 A18 | F |
| INPUT | INPUT | INPUT | INPUT | INPUT | I/O L46N_1 A25 | I/O L46P_1 A24 | I/O L36P_1 | I/O L36N_1 | GND | I/O L30N_1 A15 | G |
| INPUT VREF_0 | INPUT | INPUT | INPUT L47N_1 | INPUT L47P_1 VREF_1 | INPUT L39P_1 | INPUT L39N_1 | I/O L37N_1 | I/O L33N_1 A17 | I/O L33P_1 A16 | I/O L30P_1 A14 | H |
| VCCINT | GND | GND | INPUT L43N_1 VREF_1 | INPUT L43P_1 | VCCO_1 | I/O L37P_1 | GND | I/O L29N_1 A13 | I/O L29P_1 A12 | I/O L26N_1 A11 | J |
| GND | VCCINT | INPUT L35P_1 VREF_1 | INPUT L35N_1 | INPUT L31N_1 | I/O L32P_1 | I/O L32N_1 | I/O L25N_1 RHCLK7 | I/O L25P_1 IRDY1 RHCLK6 | VCCO_1 | I/O L26P_1 A10 | K |
| VCCINT | GND | VCCINT | INPUT L31P_1 | INPUT L27N_1 | GND | I/O L28P_1 | I/O L28N_1 | I/O L22N_1 TRDY1 RHCLK3 | I/O L22P_1 RHCLK2 | I/O L21N_1 RHCLK1 | L |
| GND | VCCINT | GND | INPUT L27P_1 VREF_1 | INPUT L23N_1 | INPUT L23P_1 | I/O L24P_1 RHCLK4 | VCCAUX | I/O L24N_1 RHCLK5 | GND | I/O L21P_1 RHCLK0 | M |
| VCCINT | GND | VCCINT | INPUT L16P_1 | INPUT L16N_1 VREF_1 | I/O L20N_1 A9 | I/O L20P_1 A8 | I/O L19N_1 A7 | I/O L19P_1 A6 | I/O L18N_1 A5 | I/O L18P_1 A4 | N |
| INPUT | VCCINT | GND | INPUT L08P_1 | INPUT L08N_1 | VCCO_1 | I/O L17N_1 A3 | GND | I/O L15P_1 | VCCO_1 | I/O L15N_1 VREF_1 | P |
| INPUT VREF_2 | INPUT VREF_2 | INPUT VREF_2 | INPUT L04P_1 | INPUT L04N_1 VREF_1 | INPUT L12P_1 | INPUT L12N_1 VREF_1 | I/O L17P_1 A2 | I/O L13P_1 | I/O L14P_1 | I/O L14N_1 | R |
| GND | INPUT | INPUT | INPUT VREF_2 | INPUT VREF_2 | I/O L03P_1 A0 | I/O L03N_1 A1 | I/O L13N_1 | I/O L11P_1 | GND | I/O L11N_1 | T |
| I/O L20N_2 GCLK3 | I/O L26N_2 D3 | VCCO_2 | INPUT | INPUT ◆ | GND | SUSPEND | I/O L10N_1 | I/O L10P_1 | I/O L09N_1 | I/O L09P_1 | U |
| I/O L20P_2 GCLK2 | I/O L26P_2 INIT_B | I/O L30P_2 | I/O L30N_2 | I/O L31N_2 | I/O L33N_2 | VCCAUX | I/O L06P_1 | I/O L06N_1 | VCCO_1 | I/O L07N_1 | V |
| I/O L18P_2 GCLK14 | I/O L23P_2 | GND | I/O L25P_2 | I/O L31P_2 | I/O L34N_2 | I/O L33P_2 | I/O L02P_1 LDC1 | I/O L02N_1 LDC0 | I/O L05N_1 | I/O L07P_1 | W |
| I/O L18N_2 GCLK15 | I/O L21N_2 | I/O L23N_2 | I/O L25N_2 | I/O L27N_2 | I/O L28N_2 D1 | I/O L34P_2 | DONE | GND | I/O L01N_1 LDC2 | I/O L05P_1 | Y |
| I/O L19P_2 GCLK0 | VCCO_2 | I/O L22P_2 | I/O L24N_2 DOUT | GND | I/O L28P_2 D2 | VCCO_2 | I/O L32N_2 | I/O L36N_2 CCLK | I/O L35N_2 | I/O L01P_1 HDC | A A |
| I/O L19N_2 GCLK1 | I/O L21P_2 | I/O L22N_2 MOSI CSI_B | I/O L24P_2 AWAKE | I/O L27P_2 | I/O L29P_2 | I/O L29N_2 | I/O L32P_2 | I/O L36P_2 D0 DIN/MISO | I/O L35P_2 | GND | A B |

Bank 1

Bank 2

DS529-4_02_012009

**Figure 26:**

## FG676: 676-ball Fine-pitch Ball Grid Array

The 676-ball fine-pitch ball grid array, FG676, supports the XC3S1400A FPGA.

Table 86 lists all the FG676 package pins. They are sorted by bank number and then by pin name. Pairs of pins that form a differential I/O pair appear together in the table. The table also shows the pin number for each pin and the pin type, as defined earlier.

The XC3S1400A has 17 unconnected balls, indicated as N.C. (No Connection) in Table 86 and with the black diamond character (◆) in Table 86 and Figure 27.

An electronic version of this package pinout table and footprint diagram is available for download from the Xilinx website at:

www.xilinx.com/support/documentation/data_sheets/s3a_pin.zip.

### Pinout Table

*Table 86:* **Spartan-3A FG676 Pinout**

| Bank | Pin Name | FG676 Ball | Type |
|---|---|---|---|
| 0 | IO_L01N_0 | F20 | I/O |
| 0 | IO_L01P_0 | G20 | I/O |
| 0 | IO_L02N_0 | F19 | I/O |
| 0 | IO_L02P_0/VREF_0 | G19 | VREF |
| 0 | IO_L05N_0 | C22 | I/O |
| 0 | IO_L05P_0 | D22 | I/O |
| 0 | IO_L06N_0 | C23 | I/O |
| 0 | IO_L06P_0 | D23 | I/O |
| 0 | IO_L07N_0 | A22 | I/O |
| 0 | IO_L07P_0 | B23 | I/O |
| 0 | IO_L08N_0 | G17 | I/O |
| 0 | IO_L08P_0 | H17 | I/O |
| 0 | IO_L09N_0 | B21 | I/O |
| 0 | IO_L09P_0 | C21 | I/O |
| 0 | IO_L10N_0 | D21 | I/O |
| 0 | IO_L10P_0 | E21 | I/O |
| 0 | IO_L11N_0 | C20 | I/O |
| 0 | IO_L11P_0 | D20 | I/O |
| 0 | IO_L12N_0 | K16 | I/O |
| 0 | IO_L12P_0 | J16 | I/O |
| 0 | IO_L13N_0 | E17 | I/O |
| 0 | IO_L13P_0 | F17 | I/O |
| 0 | IO_L14N_0 | A20 | I/O |
| 0 | IO_L14P_0/VREF_0 | B20 | VREF |

*Table 86:* **Spartan-3A FG676 Pinout*(Continued)***

| Bank | Pin Name | FG676 Ball | Type |
|---|---|---|---|
| 0 | IO_L15N_0 | A19 | I/O |
| 0 | IO_L15P_0 | B19 | I/O |
| 0 | IO_L16N_0 | H15 | I/O |
| 0 | IO_L16P_0 | G15 | I/O |
| 0 | IO_L17N_0 | C18 | I/O |
| 0 | IO_L17P_0 | D18 | I/O |
| 0 | IO_L18N_0 | A18 | I/O |
| 0 | IO_L18P_0 | B18 | I/O |
| 0 | IO_L19N_0 | B17 | I/O |
| 0 | IO_L19P_0 | C17 | I/O |
| 0 | IO_L20N_0/VREF_0 | E15 | VREF |
| 0 | IO_L20P_0 | F15 | I/O |
| 0 | IO_L21N_0 | C16 | I/O |
| 0 | IO_L21P_0 | D17 | I/O |
| 0 | IO_L22N_0 | C15 | I/O |
| 0 | IO_L22P_0 | D16 | I/O |
| 0 | IO_L23N_0 | A15 | I/O |
| 0 | IO_L23P_0 | B15 | I/O |
| 0 | IO_L24N_0 | F14 | I/O |
| 0 | IO_L24P_0 | E14 | I/O |
| 0 | IO_L25N_0/GCLK5 | J14 | GCLK |
| 0 | IO_L25P_0/GCLK4 | K14 | GCLK |
| 0 | IO_L26N_0/GCLK7 | A14 | GCLK |
| 0 | IO_L26P_0/GCLK6 | B14 | GCLK |
| 0 | IO_L27N_0/GCLK9 | G13 | GCLK |
| 0 | IO_L27P_0/GCLK8 | F13 | GCLK |
| 0 | IO_L28N_0/GCLK11 | C13 | GCLK |
| 0 | IO_L28P_0/GCLK10 | B13 | GCLK |
| 0 | IO_L29N_0 | B12 | I/O |
| 0 | IO_L29P_0 | A12 | I/O |
| 0 | IO_L30N_0 | C12 | I/O |
| 0 | IO_L30P_0 | D13 | I/O |
| 0 | IO_L31N_0 | F12 | I/O |
| 0 | IO_L31P_0 | E12 | I/O |
| 0 | IO_L32N_0/VREF_0 | D11 | VREF |
| 0 | IO_L32P_0 | C11 | I/O |
| 0 | IO_L33N_0 | B10 | I/O |
| 0 | IO_L33P_0 | A10 | I/O |

*Table 86:* **Spartan-3A FG676 Pinout*(Continued)***

| Bank | Pin Name | FG676 Ball | Type |
|---|---|---|---|
| 0 | IO_L34N_0 | D10 | I/O |
| 0 | IO_L34P_0 | C10 | I/O |
| 0 | IO_L35N_0 | H12 | I/O |
| 0 | IO_L35P_0 | G12 | I/O |
| 0 | IO_L36N_0 | B9 | I/O |
| 0 | IO_L36P_0 | A9 | I/O |
| 0 | IO_L37N_0 | D9 | I/O |
| 0 | IO_L37P_0 | E10 | I/O |
| 0 | IO_L38N_0 | B8 | I/O |
| 0 | IO_L38P_0 | A8 | I/O |
| 0 | IO_L39N_0 | K12 | I/O |
| 0 | IO_L39P_0 | J12 | I/O |
| 0 | IO_L40N_0 | D8 | I/O |
| 0 | IO_L40P_0 | C8 | I/O |
| 0 | IO_L41N_0 | C6 | I/O |
| 0 | IO_L41P_0 | B6 | I/O |
| 0 | IO_L42N_0 | C7 | I/O |
| 0 | IO_L42P_0 | B7 | I/O |
| 0 | IO_L43N_0 | K11 | I/O |
| 0 | IO_L43P_0 | J11 | I/O |
| 0 | IO_L44N_0 | D6 | I/O |
| 0 | IO_L44P_0 | C5 | I/O |
| 0 | IO_L45N_0 | B4 | I/O |
| 0 | IO_L45P_0 | A4 | I/O |
| 0 | IO_L46N_0 | H10 | I/O |
| 0 | IO_L46P_0 | G10 | I/O |
| 0 | IO_L47N_0 | H9 | I/O |
| 0 | IO_L47P_0 | G9 | I/O |
| 0 | IO_L48N_0 | E7 | I/O |
| 0 | IO_L48P_0 | F7 | I/O |
| 0 | IO_L51N_0 | B3 | I/O |
| 0 | IO_L51P_0 | A3 | I/O |
| 0 | IO_L52N_0/PUDC_B | G8 | DUAL |
| 0 | IO_L52P_0/VREF_0 | F8 | VREF |
| 0 | IP_0 | A5 | INPUT |
| 0 | IP_0 | A7 | INPUT |
| 0 | IP_0 | A13 | INPUT |
| 0 | IP_0 | A17 | INPUT |
| 0 | IP_0 | A23 | INPUT |
| 0 | IP_0 | C4 | INPUT |

*Table 86:* **Spartan-3A FG676 Pinout*(Continued)***

| Bank | Pin Name | FG676 Ball | Type |
|---|---|---|---|
| 0 | IP_0 | D12 | INPUT |
| 0 | IP_0 | D15 | INPUT |
| 0 | IP_0 | D19 | INPUT |
| 0 | IP_0 | E11 | INPUT |
| 0 | IP_0 | E18 | INPUT |
| 0 | IP_0 | E20 | INPUT |
| 0 | IP_0 | F10 | INPUT |
| 0 | IP_0 | G14 | INPUT |
| 0 | IP_0 | G16 | INPUT |
| 0 | IP_0 | H13 | INPUT |
| 0 | IP_0 | H18 | INPUT |
| 0 | IP_0 | J10 | INPUT |
| 0 | IP_0 | J13 | INPUT |
| 0 | IP_0 | J15 | INPUT |
| 0 | IP_0/VREF_0 | D7 | VREF |
| 0 | IP_0/VREF_0 | D14 | VREF |
| 0 | IP_0/VREF_0 | G11 | VREF |
| 0 | IP_0/VREF_0 | J17 | VREF |
| 0 | N.C. (◆) | A24 | N.C. |
| 0 | N.C. (◆) | B24 | N.C. |
| 0 | N.C. (◆) | D5 | N.C. |
| 0 | N.C. (◆) | E9 | N.C. |
| 0 | N.C. (◆) | F18 | N.C. |
| 0 | N.C. (◆) | E6 | N.C. |
| 0 | N.C. (◆) | F9 | N.C. |
| 0 | N.C. (◆) | G18 | N.C. |
| 0 | VCCO_0 | B5 | VCCO |
| 0 | VCCO_0 | B11 | VCCO |
| 0 | VCCO_0 | B16 | VCCO |
| 0 | VCCO_0 | B22 | VCCO |
| 0 | VCCO_0 | E8 | VCCO |
| 0 | VCCO_0 | E13 | VCCO |
| 0 | VCCO_0 | E19 | VCCO |
| 0 | VCCO_0 | H11 | VCCO |
| 0 | VCCO_0 | H16 | VCCO |
| 1 | IO_L01N_1/LDC2 | Y21 | DUAL |
| 1 | IO_L01P_1/HDC | Y20 | DUAL |
| 1 | IO_L02N_1/LDC0 | AD25 | DUAL |
| 1 | IO_L02P_1/LDC1 | AE26 | DUAL |
| 1 | IO_L03N_1/A1 | AC24 | DUAL |

*Table 86:* **Spartan-3A FG676 Pinout*(Continued)***

| Bank | Pin Name | FG676 Ball | Type |
|---|---|---|---|
| 1 | IO_L03P_1/A0 | AC23 | DUAL |
| 1 | IO_L04N_1 | W21 | I/O |
| 1 | IO_L04P_1 | W20 | I/O |
| 1 | IO_L05N_1 | AC25 | I/O |
| 1 | IO_L05P_1 | AD26 | I/O |
| 1 | IO_L06N_1 | AB26 | I/O |
| 1 | IO_L06P_1 | AC26 | I/O |
| 1 | IO_L07N_1/VREF_1 | AB24 | VREF |
| 1 | IO_L07P_1 | AB23 | I/O |
| 1 | IO_L08N_1 | V19 | I/O |
| 1 | IO_L08P_1 | V18 | I/O |
| 1 | IO_L09N_1 | AA23 | I/O |
| 1 | IO_L09P_1 | AA22 | I/O |
| 1 | IO_L10N_1 | U20 | I/O |
| 1 | IO_L10P_1 | V21 | I/O |
| 1 | IO_L11N_1 | AA25 | I/O |
| 1 | IO_L11P_1 | AA24 | I/O |
| 1 | IO_L12N_1 | U18 | I/O |
| 1 | IO_L12P_1 | U19 | I/O |
| 1 | IO_L13N_1 | Y23 | I/O |
| 1 | IO_L13P_1 | Y22 | I/O |
| 1 | IO_L14N_1 | T20 | I/O |
| 1 | IO_L14P_1 | U21 | I/O |
| 1 | IO_L15N_1 | Y25 | I/O |
| 1 | IO_L15P_1 | Y24 | I/O |
| 1 | IO_L17N_1 | T17 | I/O |
| 1 | IO_L17P_1 | T18 | I/O |
| 1 | IO_L18N_1 | V22 | I/O |
| 1 | IO_L18P_1 | W23 | I/O |
| 1 | IO_L19N_1 | V25 | I/O |
| 1 | IO_L19P_1 | V24 | I/O |
| 1 | IO_L21N_1 | U22 | I/O |
| 1 | IO_L21P_1 | V23 | I/O |
| 1 | IO_L22N_1 | R20 | I/O |
| 1 | IO_L22P_1 | R19 | I/O |
| 1 | IO_L23N_1/VREF_1 | U24 | VREF |
| 1 | IO_L23P_1 | U23 | I/O |
| 1 | IO_L25N_1/A3 | R22 | DUAL |
| 1 | IO_L25P_1/A2 | R21 | DUAL |
| 1 | IO_L26N_1/A5 | T24 | DUAL |

*Table 86:* **Spartan-3A FG676 Pinout*(Continued)***

| Bank | Pin Name | FG676 Ball | Type |
|---|---|---|---|
| 1 | IO_L26P_1/A4 | T23 | DUAL |
| 1 | IO_L27N_1/A7 | R17 | DUAL |
| 1 | IO_L27P_1/A6 | R18 | DUAL |
| 1 | IO_L29N_1/A9 | R26 | DUAL |
| 1 | IO_L29P_1/A8 | R25 | DUAL |
| 1 | IO_L30N_1/RHCLK1 | P20 | RHCLK |
| 1 | IO_L30P_1/RHCLK0 | P21 | RHCLK |
| 1 | IO_L31N_1/TRDY1/RHCLK3 | P25 | RHCLK |
| 1 | IO_L31P_1/RHCLK2 | P26 | RHCLK |
| 1 | IO_L33N_1/RHCLK5 | N24 | RHCLK |
| 1 | IO_L33P_1/RHCLK4 | P23 | RHCLK |
| 1 | IO_L34N_1/RHCLK7 | N19 | RHCLK |
| 1 | IO_L34P_1/IRDY1/RHCLK6 | P18 | RHCLK |
| 1 | IO_L35N_1/A11 | M25 | DUAL |
| 1 | IO_L35P_1/A10 | M26 | DUAL |
| 1 | IO_L37N_1 | N21 | I/O |
| 1 | IO_L37P_1 | P22 | I/O |
| 1 | IO_L38N_1/A13 | M23 | DUAL |
| 1 | IO_L38P_1/A12 | L24 | DUAL |
| 1 | IO_L39N_1/A15 | N17 | DUAL |
| 1 | IO_L39P_1/A14 | N18 | DUAL |
| 1 | IO_L41N_1 | K26 | I/O |
| 1 | IO_L41P_1 | K25 | I/O |
| 1 | IO_L42N_1/A17 | M20 | DUAL |
| 1 | IO_L42P_1/A16 | N20 | DUAL |
| 1 | IO_L43N_1/A19 | J25 | DUAL |
| 1 | IO_L43P_1/A18 | J26 | DUAL |
| 1 | IO_L45N_1 | M22 | I/O |
| 1 | IO_L45P_1 | M21 | I/O |
| 1 | IO_L46N_1 | K22 | I/O |
| 1 | IO_L46P_1 | K23 | I/O |
| 1 | IO_L47N_1 | M18 | I/O |
| 1 | IO_L47P_1 | M19 | I/O |
| 1 | IO_L49N_1 | J22 | I/O |
| 1 | IO_L49P_1 | J23 | I/O |
| 1 | IO_L50N_1 | K21 | I/O |
| 1 | IO_L50P_1 | L22 | I/O |
| 1 | IO_L51N_1 | G24 | I/O |
| 1 | IO_L51P_1 | G23 | I/O |
| 1 | IO_L53N_1 | K20 | I/O |

*Table 86:* **Spartan-3A FG676 Pinout*(Continued)***

| Bank | Pin Name | FG676 Ball | Type |
|---|---|---|---|
| 1 | IO_L53P_1 | L20 | I/O |
| 1 | IO_L54N_1 | F24 | I/O |
| 1 | IO_L54P_1 | F25 | I/O |
| 1 | IO_L55N_1 | L17 | I/O |
| 1 | IO_L55P_1 | L18 | I/O |
| 1 | IO_L56N_1 | F23 | I/O |
| 1 | IO_L56P_1 | E24 | I/O |
| 1 | IO_L57N_1 | K18 | I/O |
| 1 | IO_L57P_1 | K19 | I/O |
| 1 | IO_L58N_1 | G22 | I/O |
| 1 | IO_L58P_1/VREF_1 | F22 | VREF |
| 1 | IO_L59N_1 | J20 | I/O |
| 1 | IO_L59P_1 | J19 | I/O |
| 1 | IO_L60N_1 | D26 | I/O |
| 1 | IO_L60P_1 | E26 | I/O |
| 1 | IO_L61N_1 | D24 | I/O |
| 1 | IO_L61P_1 | D25 | I/O |
| 1 | IO_L62N_1/A21 | H21 | DUAL |
| 1 | IO_L62P_1/A20 | J21 | DUAL |
| 1 | IO_L63N_1/A23 | C25 | DUAL |
| 1 | IO_L63P_1/A22 | C26 | DUAL |
| 1 | IO_L64N_1/A25 | G21 | DUAL |
| 1 | IO_L64P_1/A24 | H20 | DUAL |
| 1 | IP_L16N_1 | Y26 | INPUT |
| 1 | IP_L16P_1 | W25 | INPUT |
| 1 | IP_L20N_1/VREF_1 | V26 | VREF |
| 1 | IP_L20P_1 | W26 | INPUT |
| 1 | IP_L24N_1/VREF_1 | U26 | VREF |
| 1 | IP_L24P_1 | U25 | INPUT |
| 1 | IP_L28N_1 | R24 | INPUT |
| 1 | IP_L28P_1/VREF_1 | R23 | VREF |
| 1 | IP_L32N_1 | N25 | INPUT |
| 1 | IP_L32P_1 | N26 | INPUT |
| 1 | IP_L36N_1 | N23 | INPUT |
| 1 | IP_L36P_1/VREF_1 | M24 | VREF |
| 1 | IP_L40N_1 | L23 | INPUT |
| 1 | IP_L40P_1 | K24 | INPUT |
| 1 | IP_L44N_1 | H25 | INPUT |
| 1 | IP_L44P_1/VREF_1 | H26 | VREF |
| 1 | IP_L48N_1 | H24 | INPUT |

*Table 86:* **Spartan-3A FG676 Pinout*(Continued)***

| Bank | Pin Name | FG676 Ball | Type |
|---|---|---|---|
| 1 | IP_L48P_1 | H23 | INPUT |
| 1 | IP_L52N_1/VREF_1 | G25 | VREF |
| 1 | IP_L52P_1 | G26 | INPUT |
| 1 | IP_L65N_1 | B25 | INPUT |
| 1 | IP_L65P_1/VREF_1 | B26 | VREF |
| 1 | VCCO_1 | AB25 | VCCO |
| 1 | VCCO_1 | E25 | VCCO |
| 1 | VCCO_1 | H22 | VCCO |
| 1 | VCCO_1 | L19 | VCCO |
| 1 | VCCO_1 | L25 | VCCO |
| 1 | VCCO_1 | N22 | VCCO |
| 1 | VCCO_1 | T19 | VCCO |
| 1 | VCCO_1 | T25 | VCCO |
| 1 | VCCO_1 | W22 | VCCO |
| 2 | IO_L01N_2/M0 | AD4 | DUAL |
| 2 | IO_L01P_2/M1 | AC4 | DUAL |
| 2 | IO_L02N_2/CSO_B | AA7 | DUAL |
| 2 | IO_L02P_2/M2 | Y7 | DUAL |
| 2 | IO_L05N_2 | Y9 | I/O |
| 2 | IO_L05P_2 | W9 | I/O |
| 2 | IO_L06N_2 | AF3 | I/O |
| 2 | IO_L06P_2 | AE3 | I/O |
| 2 | IO_L07N_2 | AF4 | I/O |
| 2 | IO_L07P_2 | AE4 | I/O |
| 2 | IO_L08N_2 | AD6 | I/O |
| 2 | IO_L08P_2 | AC6 | I/O |
| 2 | IO_L09N_2 | W10 | I/O |
| 2 | IO_L09P_2 | V10 | I/O |
| 2 | IO_L10N_2 | AE6 | I/O |
| 2 | IO_L10P_2 | AF5 | I/O |
| 2 | IO_L11N_2 | AE7 | I/O |
| 2 | IO_L11P_2 | AD7 | I/O |
| 2 | IO_L12N_2 | AA10 | I/O |
| 2 | IO_L12P_2 | Y10 | I/O |
| 2 | IO_L13N_2 | U11 | I/O |
| 2 | IO_L13P_2 | V11 | I/O |
| 2 | IO_L14N_2 | AB7 | I/O |
| 2 | IO_L14P_2 | AC8 | I/O |
| 2 | IO_L15N_2 | AC9 | I/O |
| 2 | IO_L15P_2 | AB9 | I/O |

*Table 86:* **Spartan-3A FG676 Pinout*(Continued)***

| Bank | Pin Name | FG676 Ball | Type |
|---|---|---|---|
| 2 | IO_L16N_2 | W12 | I/O |
| 2 | IO_L16P_2 | V12 | I/O |
| 2 | IO_L17N_2/VS2 | AA12 | DUAL |
| 2 | IO_L17P_2/RDWR_B | Y12 | DUAL |
| 2 | IO_L18N_2 | AF8 | I/O |
| 2 | IO_L18P_2 | AE8 | I/O |
| 2 | IO_L19N_2/VS0 | AF9 | DUAL |
| 2 | IO_L19P_2/VS1 | AE9 | DUAL |
| 2 | IO_L20N_2 | W13 | I/O |
| 2 | IO_L20P_2 | V13 | I/O |
| 2 | IO_L21N_2 | AC12 | I/O |
| 2 | IO_L21P_2 | AB12 | I/O |
| 2 | IO_L22N_2/D6 | AF10 | DUAL |
| 2 | IO_L22P_2/D7 | AE10 | DUAL |
| 2 | IO_L23N_2 | AC11 | I/O |
| 2 | IO_L23P_2 | AD11 | I/O |
| 2 | IO_L24N_2/D4 | AE12 | DUAL |
| 2 | IO_L24P_2/D5 | AF12 | DUAL |
| 2 | IO_L25N_2/GCLK13 | Y13 | GCLK |
| 2 | IO_L25P_2/GCLK12 | AA13 | GCLK |
| 2 | IO_L26N_2/GCLK15 | AE13 | GCLK |
| 2 | IO_L26P_2/GCLK14 | AF13 | GCLK |
| 2 | IO_L27N_2/GCLK1 | AA14 | GCLK |
| 2 | IO_L27P_2/GCLK0 | Y14 | GCLK |
| 2 | IO_L28N_2/GCLK3 | AE14 | GCLK |
| 2 | IO_L28P_2/GCLK2 | AF14 | GCLK |
| 2 | IO_L29N_2 | AC14 | I/O |
| 2 | IO_L29P_2 | AD14 | I/O |
| 2 | IO_L30N_2/MOSI/CSI_B | AB15 | DUAL |
| 2 | IO_L30P_2 | AC15 | I/O |
| 2 | IO_L31N_2 | W15 | I/O |
| 2 | IO_L31P_2 | V14 | I/O |
| 2 | IO_L32N_2/DOUT | AE15 | DUAL |
| 2 | IO_L32P_2/AWAKE | AD15 | PWR MGMT |
| 2 | IO_L33N_2 | AD17 | I/O |
| 2 | IO_L33P_2 | AE17 | I/O |
| 2 | IO_L34N_2/D3 | Y15 | DUAL |
| 2 | IO_L34P_2/INIT_B | AA15 | DUAL |
| 2 | IO_L35N_2 | U15 | I/O |

*Table 86:* **Spartan-3A FG676 Pinout*(Continued)***

| Bank | Pin Name | FG676 Ball | Type |
|---|---|---|---|
| 2 | IO_L35P_2 | V15 | I/O |
| 2 | IO_L36N_2/D1 | AE18 | DUAL |
| 2 | IO_L36P_2/D2 | AF18 | DUAL |
| 2 | IO_L37N_2 | AE19 | I/O |
| 2 | IO_L37P_2 | AF19 | I/O |
| 2 | IO_L38N_2 | AB16 | I/O |
| 2 | IO_L38P_2 | AC16 | I/O |
| 2 | IO_L39N_2 | AE20 | I/O |
| 2 | IO_L39P_2 | AF20 | I/O |
| 2 | IO_L40N_2 | AC19 | I/O |
| 2 | IO_L40P_2 | AD19 | I/O |
| 2 | IO_L41N_2 | AC20 | I/O |
| 2 | IO_L41P_2 | AD20 | I/O |
| 2 | IO_L42N_2 | U16 | I/O |
| 2 | IO_L42P_2 | V16 | I/O |
| 2 | IO_L43N_2 | Y17 | I/O |
| 2 | IO_L43P_2 | AA17 | I/O |
| 2 | IO_L44N_2 | AD21 | I/O |
| 2 | IO_L44P_2 | AE21 | I/O |
| 2 | IO_L45N_2 | AC21 | I/O |
| 2 | IO_L45P_2 | AD22 | I/O |
| 2 | IO_L46N_2 | V17 | I/O |
| 2 | IO_L46P_2 | W17 | I/O |
| 2 | IO_L47N_2 | AA18 | I/O |
| 2 | IO_L47P_2 | AB18 | I/O |
| 2 | IO_L48N_2 | AE23 | I/O |
| 2 | IO_L48P_2 | AF23 | I/O |
| 2 | IO_L51N_2 | AE25 | I/O |
| 2 | IO_L51P_2 | AF25 | I/O |
| 2 | IO_L52N_2/CCLK | AE24 | DUAL |
| 2 | IO_L52P_2/D0/DIN/MISO | AF24 | DUAL |
| 2 | IP_2 | AA19 | INPUT |
| 2 | IP_2 | AB13 | INPUT |
| 2 | IP_2 | AB17 | INPUT |
| 2 | IP_2 | AB20 | INPUT |
| 2 | IP_2 | AC7 | INPUT |
| 2 | IP_2 | AC13 | INPUT |
| 2 | IP_2 | AC17 | INPUT |
| 2 | IP_2 | AC18 | INPUT |
| 2 | IP_2 | AD9 | INPUT |

*Table 86:* **Spartan-3A FG676 Pinout*(Continued)***

| Bank | Pin Name | FG676 Ball | Type |
|---|---|---|---|
| 2 | IP_2 | AD10 | INPUT |
| 2 | IP_2 | AD16 | INPUT |
| 2 | IP_2 | AF2 | INPUT |
| 2 | IP_2 | AF7 | INPUT |
| 2 | IP_2 | Y11 | INPUT |
| 2 | IP_2/VREF_2 | AA9 | VREF |
| 2 | IP_2/VREF_2 | AA20 | VREF |
| 2 | IP_2/VREF_2 | AB6 | VREF |
| 2 | IP_2/VREF_2 | AB10 | VREF |
| 2 | IP_2/VREF_2 | AC10 | VREF |
| 2 | IP_2/VREF_2 | AD12 | VREF |
| 2 | IP_2/VREF_2 | AF15 | VREF |
| 2 | IP_2/VREF_2 | AF17 | VREF |
| 2 | IP_2/VREF_2 | AF22 | VREF |
| 2 | IP_2/VREF_2 | Y16 | VREF |
| 2 | N.C. (◆) | AA8 | N.C. |
| 2 | N.C. (◆) | AC5 | N.C. |
| 2 | N.C. (◆) | AC22 | N.C. |
| 2 | N.C. (◆) | AD5 | N.C. |
| 2 | N.C. (◆) | Y18 | N.C. |
| 2 | N.C. (◆) | Y19 | N.C. |
| 2 | N.C. (◆) | AD23 | N.C. |
| 2 | N.C. (◆) | W18 | N.C. |
| 2 | N.C. (◆) | Y8 | N.C. |
| 2 | VCCO_2 | AB8 | VCCO |
| 2 | VCCO_2 | AB14 | VCCO |
| 2 | VCCO_2 | AB19 | VCCO |
| 2 | VCCO_2 | AE5 | VCCO |
| 2 | VCCO_2 | AE11 | VCCO |
| 2 | VCCO_2 | AE16 | VCCO |
| 2 | VCCO_2 | AE22 | VCCO |
| 2 | VCCO_2 | W11 | VCCO |
| 2 | VCCO_2 | W16 | VCCO |
| 3 | IO_L01N_3 | J9 | I/O |
| 3 | IO_L01P_3 | J8 | I/O |
| 3 | IO_L02N_3 | B1 | I/O |
| 3 | IO_L02P_3 | B2 | I/O |
| 3 | IO_L03N_3 | H7 | I/O |
| 3 | IO_L03P_3 | G6 | I/O |
| 3 | IO_L05N_3 | K8 | I/O |

*Table 86:* **Spartan-3A FG676 Pinout*(Continued)***

| Bank | Pin Name | FG676 Ball | Type |
|---|---|---|---|
| 3 | IO_L05P_3 | K9 | I/O |
| 3 | IO_L06N_3 | E4 | I/O |
| 3 | IO_L06P_3 | D3 | I/O |
| 3 | IO_L07N_3 | F4 | I/O |
| 3 | IO_L07P_3 | E3 | I/O |
| 3 | IO_L09N_3 | G4 | I/O |
| 3 | IO_L09P_3 | F5 | I/O |
| 3 | IO_L10N_3 | H6 | I/O |
| 3 | IO_L10P_3 | J7 | I/O |
| 3 | IO_L11N_3 | F2 | I/O |
| 3 | IO_L11P_3 | E1 | I/O |
| 3 | IO_L13N_3 | J6 | I/O |
| 3 | IO_L13P_3 | K7 | I/O |
| 3 | IO_L14N_3 | F3 | I/O |
| 3 | IO_L14P_3 | G3 | I/O |
| 3 | IO_L15N_3 | L9 | I/O |
| 3 | IO_L15P_3 | L10 | I/O |
| 3 | IO_L17N_3 | H1 | I/O |
| 3 | IO_L17P_3 | H2 | I/O |
| 3 | IO_L18N_3 | L7 | I/O |
| 3 | IO_L18P_3 | K6 | I/O |
| 3 | IO_L19N_3 | J4 | I/O |
| 3 | IO_L19P_3 | J5 | I/O |
| 3 | IO_L21N_3 | M9 | I/O |
| 3 | IO_L21P_3 | M10 | I/O |
| 3 | IO_L22N_3 | K4 | I/O |
| 3 | IO_L22P_3 | K5 | I/O |
| 3 | IO_L23N_3 | K2 | I/O |
| 3 | IO_L23P_3 | K3 | I/O |
| 3 | IO_L25N_3 | L3 | I/O |
| 3 | IO_L25P_3 | L4 | I/O |
| 3 | IO_L26N_3 | M7 | I/O |
| 3 | IO_L26P_3 | M8 | I/O |
| 3 | IO_L27N_3 | M3 | I/O |
| 3 | IO_L27P_3 | M4 | I/O |
| 3 | IO_L28N_3 | M6 | I/O |
| 3 | IO_L28P_3 | M5 | I/O |
| 3 | IO_L29N_3/VREF_3 | M1 | VREF |
| 3 | IO_L29P_3 | M2 | I/O |
| 3 | IO_L30N_3 | N4 | I/O |

*Table 86:* **Spartan-3A FG676 Pinout*(Continued)***

| Bank | Pin Name | FG676 Ball | Type |
|---|---|---|---|
| 3 | IO_L30P_3 | N5 | I/O |
| 3 | IO_L31N_3 | N2 | I/O |
| 3 | IO_L31P_3 | N1 | I/O |
| 3 | IO_L32N_3/LHCLK1 | N7 | LHCLK |
| 3 | IO_L32P_3/LHCLK0 | N6 | LHCLK |
| 3 | IO_L33N_3/IRDY2/LHCLK3 | P2 | LHCLK |
| 3 | IO_L33P_3/LHCLK2 | P1 | LHCLK |
| 3 | IO_L34N_3/LHCLK5 | P3 | LHCLK |
| 3 | IO_L34P_3/LHCLK4 | P4 | LHCLK |
| 3 | IO_L35N_3/LHCLK7 | P10 | LHCLK |
| 3 | IO_L35P_3/TRDY2/LHCLK6 | N9 | LHCLK |
| 3 | IO_L36N_3 | R2 | I/O |
| 3 | IO_L36P_3/VREF_3 | R1 | VREF |
| 3 | IO_L37N_3 | R4 | I/O |
| 3 | IO_L37P_3 | R3 | I/O |
| 3 | IO_L38N_3 | T4 | I/O |
| 3 | IO_L38P_3 | T3 | I/O |
| 3 | IO_L39N_3 | P6 | I/O |
| 3 | IO_L39P_3 | P7 | I/O |
| 3 | IO_L40N_3 | R6 | I/O |
| 3 | IO_L40P_3 | R5 | I/O |
| 3 | IO_L41N_3 | P9 | I/O |
| 3 | IO_L41P_3 | P8 | I/O |
| 3 | IO_L42N_3 | U4 | I/O |
| 3 | IO_L42P_3 | T5 | I/O |
| 3 | IO_L43N_3 | R9 | I/O |
| 3 | IO_L43P_3/VREF_3 | R10 | VREF |
| 3 | IO_L44N_3 | U2 | I/O |
| 3 | IO_L44P_3 | U1 | I/O |
| 3 | IO_L45N_3 | R7 | I/O |
| 3 | IO_L45P_3 | R8 | I/O |
| 3 | IO_L47N_3 | V2 | I/O |
| 3 | IO_L47P_3 | V1 | I/O |
| 3 | IO_L48N_3 | T9 | I/O |
| 3 | IO_L48P_3 | T10 | I/O |
| 3 | IO_L49N_3 | V5 | I/O |
| 3 | IO_L49P_3 | U5 | I/O |
| 3 | IO_L51N_3 | U6 | I/O |
| 3 | IO_L51P_3 | T7 | I/O |
| 3 | IO_L52N_3 | W4 | I/O |

*Table 86:* **Spartan-3A FG676 Pinout*(Continued)***

| Bank | Pin Name | FG676 Ball | Type |
|---|---|---|---|
| 3 | IO_L52P_3 | W3 | I/O |
| 3 | IO_L53N_3 | Y2 | I/O |
| 3 | IO_L53P_3 | Y1 | I/O |
| 3 | IO_L55N_3 | AA3 | I/O |
| 3 | IO_L55P_3 | AA2 | I/O |
| 3 | IO_L56N_3 | U8 | I/O |
| 3 | IO_L56P_3 | U7 | I/O |
| 3 | IO_L57N_3 | Y6 | I/O |
| 3 | IO_L57P_3 | Y5 | I/O |
| 3 | IO_L59N_3 | V6 | I/O |
| 3 | IO_L59P_3 | V7 | I/O |
| 3 | IO_L60N_3 | AC1 | I/O |
| 3 | IO_L60P_3 | AB1 | I/O |
| 3 | IO_L61N_3 | V8 | I/O |
| 3 | IO_L61P_3 | U9 | I/O |
| 3 | IO_L63N_3 | W6 | I/O |
| 3 | IO_L63P_3 | W7 | I/O |
| 3 | IO_L64N_3 | AC3 | I/O |
| 3 | IO_L64P_3 | AC2 | I/O |
| 3 | IO_L65N_3 | AD2 | I/O |
| 3 | IO_L65P_3 | AD1 | I/O |
| 3 | IP_L04N_3/VREF_3 | C1 | VREF |
| 3 | IP_L04P_3 | C2 | INPUT |
| 3 | IP_L08N_3 | D1 | INPUT |
| 3 | IP_L08P_3 | D2 | INPUT |
| 3 | IP_L12N_3/VREF_3 | H4 | VREF |
| 3 | IP_L12P_3 | G5 | INPUT |
| 3 | IP_L16N_3 | G1 | INPUT |
| 3 | IP_L16P_3 | G2 | INPUT |
| 3 | IP_L20N_3/VREF_3 | J2 | VREF |
| 3 | IP_L20P_3 | J3 | INPUT |
| 3 | IP_L24N_3 | K1 | INPUT |
| 3 | IP_L24P_3 | J1 | INPUT |
| 3 | IP_L46N_3 | V4 | INPUT |
| 3 | IP_L46P_3 | U3 | INPUT |
| 3 | IP_L50N_3/VREF_3 | W2 | VREF |
| 3 | IP_L50P_3 | W1 | INPUT |
| 3 | IP_L54N_3 | Y4 | INPUT |
| 3 | IP_L54P_3 | Y3 | INPUT |
| 3 | IP_L58N_3/VREF_3 | AA5 | VREF |

*Table 86:* **Spartan-3A FG676 Pinout*(Continued)***

| Bank | Pin Name | FG676 Ball | Type |
|---|---|---|---|
| 3 | IP_L58P_3 | AA4 | INPUT |
| 3 | IP_L62N_3 | AB4 | INPUT |
| 3 | IP_L62P_3 | AB3 | INPUT |
| 3 | IP_L66N_3/VREF_3 | AE2 | VREF |
| 3 | IP_L66P_3 | AE1 | INPUT |
| 3 | VCCO_3 | AB2 | VCCO |
| 3 | VCCO_3 | E2 | VCCO |
| 3 | VCCO_3 | H5 | VCCO |
| 3 | VCCO_3 | L2 | VCCO |
| 3 | VCCO_3 | L8 | VCCO |
| 3 | VCCO_3 | P5 | VCCO |
| 3 | VCCO_3 | T2 | VCCO |
| 3 | VCCO_3 | T8 | VCCO |
| 3 | VCCO_3 | W5 | VCCO |
| GND | GND | A1 | GND |
| GND | GND | A6 | GND |
| GND | GND | A11 | GND |
| GND | GND | A16 | GND |
| GND | GND | A21 | GND |
| GND | GND | A26 | GND |
| GND | GND | AA1 | GND |
| GND | GND | AA6 | GND |
| GND | GND | AA11 | GND |
| GND | GND | AA16 | GND |
| GND | GND | AA21 | GND |
| GND | GND | AA26 | GND |
| GND | GND | AD3 | GND |
| GND | GND | AD8 | GND |
| GND | GND | AD13 | GND |
| GND | GND | AD18 | GND |
| GND | GND | AD24 | GND |
| GND | GND | AF1 | GND |
| GND | GND | AF6 | GND |
| GND | GND | AF11 | GND |
| GND | GND | AF16 | GND |
| GND | GND | AF21 | GND |
| GND | GND | AF26 | GND |
| GND | GND | C3 | GND |
| GND | GND | C9 | GND |
| GND | GND | C14 | GND |

*Table 86:* **Spartan-3A FG676 Pinout*(Continued)***

| Bank | Pin Name | FG676 Ball | Type |
|---|---|---|---|
| GND | GND | C19 | GND |
| GND | GND | C24 | GND |
| GND | GND | F1 | GND |
| GND | GND | F6 | GND |
| GND | GND | F11 | GND |
| GND | GND | F16 | GND |
| GND | GND | F21 | GND |
| GND | GND | F26 | GND |
| GND | GND | H3 | GND |
| GND | GND | H8 | GND |
| GND | GND | H14 | GND |
| GND | GND | H19 | GND |
| GND | GND | J24 | GND |
| GND | GND | K10 | GND |
| GND | GND | K17 | GND |
| GND | GND | L1 | GND |
| GND | GND | L6 | GND |
| GND | GND | L11 | GND |
| GND | GND | L13 | GND |
| GND | GND | L15 | GND |
| GND | GND | L21 | GND |
| GND | GND | L26 | GND |
| GND | GND | M12 | GND |
| GND | GND | M14 | GND |
| GND | GND | M16 | GND |
| GND | GND | N3 | GND |
| GND | GND | N8 | GND |
| GND | GND | N11 | GND |
| GND | GND | N15 | GND |
| GND | GND | P12 | GND |
| GND | GND | P16 | GND |
| GND | GND | P19 | GND |
| GND | GND | P24 | GND |
| GND | GND | R11 | GND |
| GND | GND | R13 | GND |
| GND | GND | R15 | GND |
| GND | GND | T1 | GND |
| GND | GND | T6 | GND |
| GND | GND | T12 | GND |
| GND | GND | T14 | GND |

*Table 86:* **Spartan-3A FG676 Pinout*(Continued)***

| Bank | Pin Name | FG676 Ball | Type |
|---|---|---|---|
| GND | GND | T16 | GND |
| GND | GND | T21 | GND |
| GND | GND | T26 | GND |
| GND | GND | U10 | GND |
| GND | GND | U13 | GND |
| GND | GND | U17 | GND |
| GND | GND | V3 | GND |
| GND | GND | W8 | GND |
| GND | GND | W14 | GND |
| GND | GND | W19 | GND |
| GND | GND | W24 | GND |
| VCCAUX | SUSPEND | V20 | PWR MGMT |
| VCCAUX | DONE | AB21 | CONFIG |
| VCCAUX | PROG_B | A2 | CONFIG |
| VCCAUX | TCK | A25 | JTAG |
| VCCAUX | TDI | G7 | JTAG |
| VCCAUX | TDO | E23 | JTAG |
| VCCAUX | TMS | D4 | JTAG |
| VCCAUX | VCCAUX | AB5 | VCCAUX |
| VCCAUX | VCCAUX | AB11 | VCCAUX |
| VCCAUX | VCCAUX | AB22 | VCCAUX |
| VCCAUX | VCCAUX | E5 | VCCAUX |
| VCCAUX | VCCAUX | E16 | VCCAUX |
| VCCAUX | VCCAUX | E22 | VCCAUX |
| VCCAUX | VCCAUX | J18 | VCCAUX |
| VCCAUX | VCCAUX | K13 | VCCAUX |
| VCCAUX | VCCAUX | L5 | VCCAUX |
| VCCAUX | VCCAUX | N10 | VCCAUX |
| VCCAUX | VCCAUX | P17 | VCCAUX |
| VCCAUX | VCCAUX | T22 | VCCAUX |
| VCCAUX | VCCAUX | U14 | VCCAUX |
| VCCAUX | VCCAUX | V9 | VCCAUX |
| VCCINT | VCCINT | K15 | VCCINT |
| VCCINT | VCCINT | L12 | VCCINT |
| VCCINT | VCCINT | L14 | VCCINT |
| VCCINT | VCCINT | L16 | VCCINT |
| VCCINT | VCCINT | M11 | VCCINT |
| VCCINT | VCCINT | M13 | VCCINT |
| VCCINT | VCCINT | M15 | VCCINT |

*Table 86:* **Spartan-3A FG676 Pinout*(Continued)***

| Bank | Pin Name | FG676 Ball | Type |
|---|---|---|---|
| VCCINT | VCCINT | M17 | VCCINT |
| VCCINT | VCCINT | N12 | VCCINT |
| VCCINT | VCCINT | N13 | VCCINT |
| VCCINT | VCCINT | N14 | VCCINT |
| VCCINT | VCCINT | N16 | VCCINT |
| VCCINT | VCCINT | P11 | VCCINT |
| VCCINT | VCCINT | P13 | VCCINT |
| VCCINT | VCCINT | P14 | VCCINT |
| VCCINT | VCCINT | P15 | VCCINT |
| VCCINT | VCCINT | R12 | VCCINT |
| VCCINT | VCCINT | R14 | VCCINT |
| VCCINT | VCCINT | R16 | VCCINT |
| VCCINT | VCCINT | T11 | VCCINT |
| VCCINT | VCCINT | T13 | VCCINT |
| VCCINT | VCCINT | T15 | VCCINT |
| VCCINT | VCCINT | U12 | VCCINT |

## User I/Os by Bank

Table 87 indicates how the 502 available user-I/O pins are distributed between the four I/O banks on the FG676 package. The AWAKE pin is counted as a dual-purpose I/O.

*Table 87:* **User I/Os Per Bank for the XC3S1400A in the FG676 Package**

| Package Edge | I/O Bank | Maximum I/O | All Possible I/O Pins by Type | | | | |
|---|---|---|---|---|---|---|---|
| | | | I/O | INPUT | DUAL | VREF | CLK |
| Top | 0 | 120 | 82 | 20 | 1 | 9 | 8 |
| Right | 1 | 130 | 67 | 15 | 30 | 10 | 8 |
| Bottom | 2 | 120 | 67 | 14 | 21 | 10 | 8 |
| Left | 3 | 132 | 97 | 18 | 0 | 9 | 8 |
| **TOTAL** | | **502** | **313** | **67** | **52** | **38** | **32** |

## Footprint Migration Differences

The XC3S1400A FPGA is the only Spartan-3A device offered in the FG676 package. However, Table 88 summarizes footprint and functionality differences between the XC3S1400A and the XC3SD1800A in the Spartan-3A DSP family. There are 17 unconnected balls in the XC3S1400A that become 16 input-only pins and one I/O pin in the XC3SD1800A. All other pins not listed in Table 88 unconditionally migrate between the Spartan-3A devices and the Spartan-3A DSP devices available in the FG676 package. The arrows indicate the direction for easy migration. For more details on the Spartan-3A DSP family and pinouts, and additional differences in the FG676 pinout for the XC3SD3400A device, see DS610.

*Table 88:* **FG676 Footprint Differences**

| Pin | Bank | XC3S1400A | Migration | XC3SD1800A |
|---|---|---|---|---|
| A24 | 0 | N.C. | → | INPUT |
| B24 | 0 | N.C. | → | INPUT |
| D5 | 0 | N.C. | → | INPUT |
| E6 | 0 | N.C. | → | VREF (INPUT) |
| E9 | 0 | N.C. | → | INPUT |
| F9 | 0 | N.C. | → | VREF (INPUT) |
| F18 | 0 | N.C. | → | INPUT |
| G18 | 0 | N.C. | → | VREF (INPUT) |
| W18 | 2 | N.C. | → | VREF (INPUT) |
| Y8 | 2 | N.C. | → | VREF (INPUT) |
| Y18 | 2 | N.C. | → | INPUT |
| Y19 | 2 | N.C. | → | INPUT |
| AA8 | 2 | N.C. | → | INPUT |
| AC5 | 2 | N.C. | → | INPUT |
| AC22 | 2 | N.C. | → | I/O |
| AD5 | 2 | N.C. | → | INPUT |
| AD23 | 2 | N.C. | → | VREF(INPUT) |
| **DIFFERENCES** | | | **17** | |

Legend:

→ This pin can unconditionally migrate from the device on the left to the device on the right. Migration in the other direction is possible depending on how the pin is configured for the device on the right.

## FG676 Footprint

### Left Half of FG676 Package (Top View)

- 313 — **I/O:** Unrestricted, general-purpose user I/O
- 67 — **INPUT:** Unrestricted, general-purpose input pin
- 51 — **DUAL:** Configuration pins, then possible user I/O
- 2 — **SUSPEND:** Dedicated SUSPEND and dual-purpose AWAKE Power Management pins
- 38 — **VREF:** User I/O or input voltage reference for bank
- 32 — **CLK:** User I/O, input, or clock buffer input
- 2 — **CONFIG:** Dedicated configuration pins
- 4 — **JTAG:** Dedicated JTAG port pins
- 77 — **GND:** Ground
- 36 — **VCCO:** Output voltage supply for bank
- 23 — **VCCINT:** Internal core supply voltage (+1.2V)
- 14 — **VCCAUX:** Auxiliary supply voltage
- 17 ◆ — **N.C.:** Not connected

Bank 0

| | 1 | 2 | 3 | 4 | 5 | 6 | 7 | 8 | 9 | 10 | 11 | 12 | 13 |
|---|---|---|---|---|---|---|---|---|---|---|---|---|---|
| A | GND | PROG_B | I/O L51P_0 | I/O L45P_0 | INPUT | GND | INPUT | I/O L38P_0 | I/O L36P_0 | I/O L33P_0 | GND | I/O L29P_0 | INPUT |
| B | I/O L02N_3 | I/O L02P_3 | I/O L51N_0 | I/O L45N_0 | VCCO_0 | I/O L41P_0 | I/O L42P_0 | I/O L38N_0 | I/O L36N_0 | I/O L33N_0 | VCCO_0 | I/O L29N_0 | I/O L28P_0 GCLK10 |
| C | INPUT L04N_3 VREF_3 | INPUT L04P_3 | GND | INPUT | I/O L44P_0 | I/O L41N_0 | I/O L42N_0 | I/O L40P_0 | GND | I/O L34P_0 | I/O L32P_0 | I/O L30N_0 | I/O L28N_0 GCLK11 |
| D | INPUT L08N_3 | INPUT L08P_3 | I/O L06P_3 | TMS | N.C. ◆ | I/O L44N_0 | INPUT VREF_0 | I/O L40N_0 | I/O L37N_0 | I/O L34N_0 | I/O L32N_0 VREF_0 | INPUT | I/O L30P_0 |
| E | I/O L11P_3 | VCCO_3 | I/O L07P_3 | I/O L06N_3 | VCCAUX | N.C. ◆ | I/O L48N_0 | VCCO_0 | N.C. ◆ | I/O L37P_0 | INPUT | I/O L31P_0 | VCCO_0 |
| F | GND | I/O L11N_3 | I/O L14N_3 | I/O L07N_3 | I/O L09P_3 | GND | I/O L48P_0 | I/O L52P_0 VREF_0 | N.C. ◆ | INPUT | GND | I/O L31N_0 | I/O L27P_0 GCLK8 |
| G | INPUT L16N_3 | INPUT L16P_3 | I/O L14P_3 | I/O L09N_3 | INPUT L12P_3 | I/O L03P_3 | TDI | I/O L52N_0 PUDC_B | I/O L47P_0 | I/O L46P_0 | INPUT VREF_0 | I/O L35P_0 | I/O L27N_0 GCLK9 |
| H | I/O L17N_3 | I/O L17P_3 | GND | INPUT L12N_3 VREF_3 | VCCO_3 | I/O L10N_3 | I/O L03N_3 | GND | I/O L47N_0 | I/O L46N_0 | VCCO_0 | I/O L35N_0 | INPUT |
| J | INPUT L24P_3 | INPUT L20N_3 VREF_3 | INPUT L20P_3 | I/O L19N_3 | I/O L19P_3 | I/O L13N_3 | I/O L10P_3 | I/O L01P_3 | I/O L01N_3 | INPUT | I/O L43P_0 | I/O L39P_0 | INPUT |
| K | INPUT L24N_3 | I/O L23N_3 | I/O L23P_3 | I/O L22N_3 | I/O L22P_3 | I/O L18P_3 | I/O L13P_3 | I/O L05N_3 | I/O L05P_3 | GND | I/O L43N_0 | I/O L39N_0 | VCCAUX |
| L | GND | VCCO_3 | I/O L25N_3 | I/O L25P_3 | VCCAUX | GND | I/O L18N_3 | VCCO_3 | I/O L15N_3 | I/O L15P_3 | GND | VCCINT | GND |
| M | I/O L29N_3 VREF_3 | I/O L29P_3 | I/O L27N_3 | I/O L27P_3 | I/O L28P_3 | I/O L28N_3 | I/O L26N_3 | I/O L26P_3 | I/O L21N_3 | I/O L21P_3 | VCCINT | GND | VCCINT |
| N | I/O L31P_3 | I/O L31N_3 | GND | I/O L30N_3 | I/O L30P_3 | I/O L32P_3 LHCLK0 | I/O L32N_3 LHCLK1 | GND | I/O L35P_3 TRDY2 LHCLK6 | VCCAUX | GND | VCCINT | VCCINT |
| P | I/O L33P_3 LHCLK2 | I/O L33N_3 IRDY2 LHCLK3 | I/O L34N_3 LHCLK5 | I/O L34P_3 LHCLK4 | VCCO_3 | I/O L39N_3 | I/O L39P_3 | I/O L41P_3 | I/O L41N_3 | I/O L35N_3 LHCLK7 | VCCINT | GND | VCCINT |
| R | I/O L36P_3 VREF_3 | I/O L36N_3 | I/O L37P_3 | I/O L37N_3 | I/O L40P_3 | I/O L40N_3 | I/O L45N_3 | I/O L45P_3 | I/O L43N_3 | I/O L43P_3 VREF_3 | GND | VCCINT | GND |
| T | GND | VCCO_3 | I/O L38P_3 | I/O L38N_3 | I/O L42P_3 | GND | I/O L51P_3 | VCCO_3 | I/O L48N_3 | I/O L48P_3 | VCCINT | GND | VCCINT |
| U | I/O L44P_3 | I/O L44N_3 | INPUT L46P_3 | I/O L42N_3 | I/O L49P_3 | I/O L51N_3 | I/O L56P_3 | I/O L56N_3 | I/O L61P_3 | GND | I/O L13N_2 | VCCINT | GND |
| V | I/O L47P_3 | I/O L47N_3 | GND | INPUT L46N_3 | I/O L49N_3 | I/O L59N_3 | I/O L59P_3 | I/O L61N_3 | VCCAUX | I/O L09P_2 | I/O L13P_2 | I/O L16P_2 | I/O L20P_2 |
| W | INPUT L50P_3 | INPUT L50N_3 VREF_3 | I/O L52P_3 | I/O L52N_3 | VCCO_3 | I/O L63N_3 | I/O L63P_3 | GND | I/O L05P_2 | I/O L09N_2 | VCCO_2 | I/O L16N_2 | I/O L20N_2 |
| Y | I/O L53P_3 | I/O L53N_3 | INPUT L54P_3 | INPUT L54N_3 | I/O L57P_3 | I/O L57N_3 | I/O L02P_2 M2 | N.C. ◆ | I/O L05N_2 | I/O L12P_2 | INPUT | I/O L17P_2 RDWR_B | I/O L25N_2 GCLK13 |
| AA | GND | I/O L55P_3 | I/O L55N_3 | INPUT L58P_3 | INPUT L58N_3 VREF_3 | GND | I/O L02N_2 CSO_B | N.C. ◆ | INPUT VREF_2 | I/O L12N_2 | GND | I/O L17N_2 VS2 | I/O L25P_2 GCLK12 |
| AB | I/O L60P_3 | VCCO_3 | INPUT L62P_3 | INPUT L62N_3 | VCCAUX | INPUT VREF_2 | I/O L14N_2 | VCCO_2 | I/O L15P_2 | INPUT VREF_2 | VCCAUX | I/O L21P_2 | INPUT |
| AC | I/O L60N_3 | I/O L64P_3 | I/O L64N_3 | I/O L01P_2 M1 | N.C. ◆ | I/O L08P_2 | INPUT | I/O L14P_2 | I/O L15N_2 | INPUT VREF_2 | I/O L23N_2 | I/O L21N_2 | INPUT |
| AD | I/O L65P_3 | I/O L65N_3 | GND | I/O L01N_2 M0 | N.C. ◆ | I/O L08N_2 | I/O L11P_2 | GND | INPUT | INPUT | I/O L23P_2 | INPUT VREF_2 | GND |
| AE | INPUT L66P_3 | INPUT L66N_3 VREF_3 | I/O L06P_2 | I/O L07P_2 | VCCO_2 | I/O L10N_2 | I/O L11N_2 | I/O L18P_2 | I/O L19P_2 VS1 | I/O L22P_2 D7 | VCCO_2 | I/O L24N_2 D4 | I/O L26N_2 GCLK15 |
| AF | GND | INPUT | I/O L06N_2 | I/O L07N_2 | I/O L10P_2 | GND | INPUT | I/O L18N_2 | I/O L19N_2 VS0 | I/O L22N_2 D6 | GND | I/O L24P_2 D5 | I/O L26P_2 GCLK14 |

Bank 3

Bank 2

DS529-4_07_102506

*Figure 27:* **FG676 Package Footprint (Top View)**

## Right Half of FG676 Package (Top View)

Bank 0

| 14 | 15 | 16 | 17 | 18 | 19 | 20 | 21 | 22 | 23 | 24 | 25 | 26 | |
|---|---|---|---|---|---|---|---|---|---|---|---|---|---|
| I/O L26N_0 GCLK7 | I/O L23N_0 | GND | INPUT | I/O L18N_0 | I/O L15N_0 | I/O L14N_0 | GND | I/O L07N_0 | INPUT | N.C. ◆ | TCK | GND | A |
| I/O L26P_0 GCLK6 | I/O L23P_0 | VCCO_0 | I/O L19N_0 | I/O L18P_0 | I/O L15P_0 | I/O L14P_0 VREF_0 | I/O L09N_0 | VCCO_0 | I/O L07P_0 | N.C. ◆ | INPUT L65N_1 | INPUT L65P_1 VREF_1 | B |
| GND | I/O L22N_0 | I/O L21N_0 | I/O L19P_0 | I/O L17N_0 | GND | I/O L11N_0 | I/O L09P_0 | I/O L05N_0 | I/O L06N_0 | GND | I/O L63N_1 A23 | I/O L63P_1 A22 | C |
| INPUT VREF_0 | INPUT | I/O L22P_0 | I/O L21P_0 | I/O L17P_0 | INPUT | I/O L11P_0 | I/O L10N_0 | I/O L05P_0 | I/O L06P_0 | I/O L61N_1 | I/O L61P_1 | I/O L60N_1 | D |
| I/O L24P_0 | I/O L20N_0 VREF_0 | VCCAUX | I/O L13N_0 | INPUT | VCCO_0 | INPUT | I/O L10P_0 | VCCAUX | TDO | I/O L56P_1 | VCCO_1 | I/O L60P_1 | E |
| I/O L24N_0 | I/O L20P_0 | GND | I/O L13P_0 | N.C. ◆ | I/O L02N_0 | I/O L01N_0 | GND | I/O L58P_1 VREF_1 | I/O L56N_1 | I/O L54N_1 | I/O L54P_1 | GND | F |
| INPUT | I/O L16P_0 | INPUT | I/O L08N_0 | N.C. ◆ | I/O L02P_0 VREF_0 | I/O L01P_0 | I/O L64N_1 A25 | I/O L58N_1 | I/O L51P_1 | I/O L51N_1 | INPUT L52N_1 VREF_1 | INPUT L52P_1 | G |
| GND | I/O L16N_0 | VCCO_0 | I/O L08P_0 | INPUT | GND | I/O L64P_1 A24 | I/O L62N_1 A21 | VCCO_1 | INPUT L48P_1 | INPUT L48N_1 | INPUT L44N_1 | INPUT L44P_1 VREF_1 | H |
| I/O L25N_0 GCLK5 | INPUT | I/O L12P_0 | INPUT VREF_0 | VCCAUX | I/O L59P_1 | I/O L59N_1 | I/O L62P_1 A20 | I/O L49N_1 | I/O L49P_1 | GND | I/O L43N_1 A19 | I/O L43P_1 A18 | J |
| I/O L25P_0 GCLK4 | VCCINT | I/O L12N_0 | GND | I/O L57N_1 | I/O L57P_1 | I/O L53N_1 | I/O L50N_1 | I/O L46N_1 | I/O L46P_1 | INPUT L40P_1 | I/O L41P_1 | I/O L41N_1 | K |
| VCCINT | GND | VCCINT | I/O L55N_1 | I/O L55P_1 | VCCO_1 | I/O L53P_1 | GND | I/O L50P_1 | INPUT L40N_1 | I/O L38P_1 A12 | VCCO_1 | GND | L |
| GND | VCCINT | GND | VCCINT | I/O L47N_1 | I/O L47P_1 | I/O L42N_1 A17 | I/O L45P_1 | I/O L45N_1 | I/O L38N_1 A13 | INPUT L36P_1 VREF_1 | I/O L35N_1 A11 | I/O L35P_1 A10 | M |
| VCCINT | GND | VCCINT | I/O L39N_1 A15 | I/O L39P_1 A14 | I/O L34N_1 RHCLK7 | I/O L42P_1 A16 | I/O L37N_1 | VCCO_1 | INPUT L36N_1 | I/O L33N_1 RHCLK5 | INPUT L32N_1 | INPUT L32P_1 | N |
| VCCINT | VCCINT | GND | VCCAUX | I/O L34P_1 IRDY1 RHCLK6 | GND | I/O L30N_1 RHCLK1 | I/O L30P_1 RHCLK0 | I/O L37P_1 | I/O L33P_1 RHCLK4 | GND | I/O L31N_1 TRDY1 RHCLK3 | I/O L31P_1 RHCLK2 | P |
| VCCINT | GND | VCCINT | I/O L27N_1 A7 | I/O L27P_1 A6 | I/O L22P_1 | I/O L22N_1 | I/O L25P_1 A2 | I/O L25N_1 A3 | INPUT L28P_1 VREF_1 | INPUT L28N_1 | I/O L29P_1 A8 | I/O L29N_1 A9 | R |
| GND | VCCINT | GND | I/O L17N_1 | I/O L17P_1 | VCCO_1 | I/O L14N_1 | GND | VCCAUX | I/O L26P_1 A4 | I/O L26N_1 A5 | VCCO_1 | GND | T |
| VCCAUX | I/O L35N_2 | I/O L42N_2 | GND | I/O L12N_1 | I/O L12P_1 | I/O L10N_1 | I/O L14P_1 | I/O L21N_1 | I/O L23P_1 | I/O L23N_1 VREF_1 | INPUT L24P_1 | INPUT L24N_1 VREF_1 | U |
| I/O L31P_2 | I/O L35P_2 | I/O L42P_2 | I/O L46N_2 | I/O L08P_1 | I/O L08N_1 | SUSPEND | I/O L10P_1 | I/O L18N_1 | I/O L21P_1 | I/O L19P_1 | I/O L19N_1 | INPUT L20N_1 VREF_1 | V |
| GND | I/O L31N_2 | VCCO_2 | I/O L46P_2 | N.C. ◆ | GND | I/O L04P_1 | I/O L04N_1 | VCCO_1 | I/O L18P_1 | GND | INPUT L16P_1 | INPUT L20P_1 | W |
| I/O L27P_2 GCLK0 | I/O L34N_2 D3 | INPUT 2 VREF_2 | I/O L43N_2 | N.C. ◆ | N.C. ◆ | I/O L01P_1 HDC | I/O L01N_1 LDC2 | I/O L13P_1 | I/O L13N_1 | I/O L15P_1 | I/O L15N_1 | INPUT L16N_1 | Y |
| I/O L27N_2 GCLK1 | I/O L34P_2 INIT_B | GND | I/O L43P_2 | I/O L47N_2 | INPUT | INPUT VREF_2 | GND | I/O L09P_1 | I/O L09N_1 | I/O L11P_1 | I/O L11N_1 | GND | A A |
| VCCO_2 | I/O L30N_2 MOSI CSI_B | I/O L38N_2 | INPUT | I/O L47P_2 | VCCO_2 | INPUT | DONE | VCCAUX | I/O L07P_1 | I/O L07N_1 VREF_1 | VCCO_1 | I/O L06N_1 | A B |
| I/O L29N_2 | I/O L30P_2 | I/O L38P_2 | INPUT | INPUT | I/O L40N_2 | I/O L41N_2 | I/O L45N_2 | N.C. ◆ | I/O L03P_1 A0 | I/O L03N_1 A1 | I/O L05N_1 | I/O L06P_1 | A C |
| I/O L29P_2 | I/O L32P_2 AWAKE | INPUT | I/O L33N_2 | GND | I/O L40P_2 | I/O L41P_2 | I/O L44N_2 | I/O L45P_2 | N.C. ◆ | GND | I/O L02N_1 LDC0 | I/O L05P_1 | A D |
| I/O L28N_2 GCLK3 | I/O L32N_2 DOUT | VCCO_2 | I/O L33P_2 | I/O L36N_2 D1 | I/O L37N_2 | I/O L39N_2 | I/O L44P_2 | VCCO_2 | I/O L48N_2 | I/O L52N_2 CCLK | I/O L51N_2 | I/O L02P_1 LDC1 | A E |
| I/O L28P_2 GCLK2 | INPUT VREF_2 | GND | INPUT VREF_2 | I/O L36P_2 D2 | I/O L37P_2 | I/O L39P_2 | GND | INPUT VREF_2 | I/O L48P_2 | I/O L52P_2 D0 DIN/MISO | I/O L51P_2 | GND | A F |

Bank 1

Bank 2

DS529-4_08_012009

## Revision History

The following table shows the revision history for this document.

| Date | Version | Revision |
|---|---|---|
| 12/05/06 | 1.0 | Initial release. |
| 02/02/07 | 1.1 | Promoted to Preliminary status. Added DOUT pin to DUAL-type pins in Table 57. Corrected counts for DUAL pins and differential pairs in Table 59. Corrected minor typographical error on pin names for pin numbers P24 and P25 in Table 65. Highlighted the differences in differential I/O pairs between the XC3S50A and XC3S200A in the FT256 package, shown in Table 67 and added Table 73 and Table 74 to summarize the differences. |
| 03/16/07 | 1.2 | Corrected minor typographical error in Figure 19. |
| 04/23/07 | 1.3 | Added reference to compatible Spartan-3A DSP family. |
| 05/08/07 | 1.4 | Added note regarding banking rules. |
| 07/10/07 | 1.5 | Updated Thermal Characteristics in Table 61. |
| 04/15/08 | 1.6 | Added VQ100 for XC3S50A and XC3S200A and added FT256 for XC3S700A and XCS1400A to Table 58, Table 59, and Table 61. Updated Thermal Characteristics with latest data in Table 61. Corrected bank for T8 and type for U16 in Table 85. Removed VREF name on 6 unconnected N.C. pins for XC3S1400A FG676 in Table 86 and Figure 27. These pins are noted as VREF if migrating up to the XC3SD1800A in Table 88. |
| 05/28/08 | 1.7 | Added "Package Overview" section. |
| 03/06/09 | 1.8 | Corrected bank designation for SUSPEND to VCCAUX. Corrected bank designation for JTAG pins in XC3S700A and XC3S1400A FT256 to VCCAUX. |
| 08/19/10 | 2.0 | Corrected pin 36 number in Figure 17 and Figure 18. Noted difference in FT256 P10/T10 function between XC3S50A and larger devices in Table 67 and Table 73. |
| 12/18/18 | 2.1 | Updated for *Lead-Frame Plating Composition Change For Legacy Eutectic Products* (XCN18024). Updated Table 60 and Note 1. Removed Table 61. |

Компания «ЭлектроПласт» предлагает заключение долгосрочных отношений при поставках импортных электронных компонентов на взаимовыгодных условиях!

Наши преимущества:

- Оперативные поставки широкого спектра электронных компонентов отечественного и импортного производства напрямую от производителей и с крупнейших мировых складов;
- Поставка более 17-ти миллионов наименований электронных компонентов;
- Поставка сложных, дефицитных, либо снятых с производства позиций;
- Оперативные сроки поставки под заказ (от 5 рабочих дней);
- Экспресс доставка в любую точку России;
- Техническая поддержка проекта, помощь в подборе аналогов, поставка прототипов;
- Система менеджмента качества сертифицирована по Международному стандарту ISO 9001;
- Лицензия ФСБ на осуществление работ с использованием сведений, составляющих государственную тайну;
- Поставка специализированных компонентов (Xilinx, Altera, Analog Devices, Intersil, Interpoint, Microsemi, Aeroflex, Peregrine, Syfer, Eurofarad, Texas Instrument, Miteq, Cobham, E2V, MA-COM, Hittite, Mini-Circuits,General Dynamics и др.);

Помимо этого, одним из направлений компании «ЭлектроПласт» является направление «Источники питания». Мы предлагаем Вам помощь Конструкторского отдела:

- Подбор оптимального решения, техническое обоснование при выборе компонента;
- Подбор аналогов;
- Консультации по применению компонента;
- Поставка образцов и прототипов;
- Техническая поддержка проекта;
- Защита от снятия компонента с производства.

**Как с нами связаться**

**Телефон:** 8 (812) 309 58 32 (многоканальный)
**Факс:** 8 (812) 320-02-42
**Электронная почта:** org@eplast1.ru
**Адрес:** 198099, г. Санкт-Петербург, ул. Калинина, дом 2, корпус 4, литера А.