SEALED, ILLUMINATED ROCKER SWITCHES

ATTRACTIVE & RUGGED FOR WET & DUSTY ENVIRONMENTS

The OTTO K3 rocker switch is a quality, precision switch designed to comply with standards established for appliance, marine (ignition protection) and off-road vehicles along with other demanding applications where rugged rocker switches are required.

K3 sealed rocker switches snap into industry-standard panel cutouts. Choose illuminated and printed legends, thru-panel drain option and switching compatibility from low level to 20 amps.

The K3 offers a choice of LED, incandescent and neon illumination. Legends can be stamped onto a non-illuminated button, stamped onto an illuminated lens or laser etched into the lens and backlit.

Available in standard and low level contact ratings, the K3 rockers will fit a wide range of applications. Expect a minimum of 25,000 cycles at a full rated load of 20 amps resistive or 15 amps inductive. 100,000 cycles mechanical. A full complement of switch operation is available including momentary and maintained action in 2 or 3-position switches in SPST, SPDT, SPTT, DPST and DPDT circuit arrangements.

OTTO can provide custom colors upon request. Value-added assemblies with wire leads are also available. Please consult the factory for assistance.

Features:

- **Sealed watertight per IP68S**
- **Snap-in panel mounting into industry standard panel cutout**
- **Optional panel seal gasket**
- **Thru-panel drain option**
- **LED, neon & incandescent lighting**
- **0.250" Quick Connect terminals**
- **Optional one-piece connector**
- **Optional terminal barriers**
- **Low level up to 20 amp switch**
- **Configurable Single Pole Triple Throw (SPTT) with external jumpers**
- **RoHS/WEEE/Reach compliant**

Standard Characteristics/Ratings:		
ELECTRICAL RATINGS:		
Load	**Sea Level @ 12/28VDC**	**Sea Level @ 125VAC, 60Hz**
Resistive	20A	16A
Inductive	15A	15A
Lamp	5A	5A
Motor	0.5HP @ 110VAC	
DWV	1050Vrms except across light terminals	
Low Level	10mA @ 30mV	
Electrical Life:	25,000 cycles	
LIGHTING:		
Light Source	**Rating**	
Incandescent	(VDC) 6V, 12V, 24V	
Neon	(VAC) 125V, 250V	
LED	(VDC) 2V, 6V, 12V, 24V	
Mechanical Life:	100,000 cycles	
Seal:	IP68S	
Operating Temp Range:	-40°C to +85°C	
MATERIALS:		
Case:	Thermoplastic, black	
Button:	Thermoplastic	
Terminals/Contact:	Brass, silver alloy with silver plate, gold flash for low level	
Terminal Hardware:	K3 series recommended Quick Connect terminals: AMP 60253-2 for 12-16 AWG AMP 42100-2 for 14-18 AWG	
Mounting Hardware:	None provided	

SEALED, ILLUMINATED ROCKER SWITCHES

K3 SERIES PART NUMBER CODE

Part Number Code Continued Below

K3 X X XX X X

Base Options

A. With Keying Pin Only
Standard Rating
Silver Plate
B. Without Barriers or Pin
Standard Rating
Silver Plate
C. With Terminal Barriers Only
Standard Rating
Silver Plate
D. With Keying Pin Only
Low Level Rating
Gold Plate
E. Without Barriers or Pin
Low Level Rating
Gold Plate
F. With Terminal Barriers Only
Low Level Rating
Gold Plate
G. With Keying Pin Only
Standard Rating
No Plate
H. Without Barriers or Pin
Standard Rating
No Plate
J. With Terminal Barriers Only
Standard Rating
No Plate

Case Style/Button Color

A. Case With Drain Holes
Button Color: Black
B. Case Without Drain Holes
Button Color: Black
C. Case With Drain Holes
Button Color: Red
D. Case Without Drain Holes
Button Color: Red
E. Case With Drain Holes
Button Color: White
F. Case Without Drain Holes
Button Color: White

NOTE: Switch case is black for all options below:

1. Case With Drain Holes
Button Not Included
2. Case Without Drain Holes
Button Not Included

Switch Action/Circuit

	Position "A"	Position "B"	Position "C"	Circuit
1A.	3-4	NONE	OFF	SPST
2A.	3-4/8-9	NONE	OFF	DPST
1B.	3-4	NONE	3-2	SPDT
2B.	3-4/8-9	NONE	3-2/8-7	DPDT
1C.	(3-4)	NONE	OFF	SPST
2C.	(3-4)/(8-9)	NONE	OFF	DPST
1D.	(3-4)	NONE	3-2	SPDT
2D.	(3-4)/(8-9)	NONE	3-2/8-7	DPDT
1E.	(3-4)	OFF	(3-2)	SPDT
2E.	(3-4)/(8-9)	OFF	(3-2)/(8-7)	DPDT
1F.	3-4	OFF	3-2	SPDT
2F.	3-4/8-9	OFF	3-2/8-7	DPDT
1G.	(3-4)	OFF	3-2	SPDT
2G.	(3-4)/(8-9)	OFF	3-2/8-7	DPDT

Special Circuits

	Position "A"	Position "B"	Position "C"	Special Circuits
1H.	3-4/8-9	8-9	OFF	ON/ON/OFF
1J.	3-4/8-9	8-9	NONE	ON/ON/NONE
1K.	(3-4)/(8-9)	8-9	OFF	(ON)/ON/OFF
1L	(3-4)/(8-9)	8-9	NONE	(ON)/ON/NONE
1M.	3-4/8-9	3-2/8-9	3-2/8-7	ON/ON/ON
1N.	(3-4)/(8-9)	3-2/8-9	3-2/8-7	(ON)/ON/ON
1P.	(3-4)/(8-9)	3-2/8-9	(3-2)/(8-7)	(ON)/ON/(ON)
2R.	3-4/8-9	OFF/8-9	OFF/OFF	ON/OFF/OFF ON/ON/OFF
2S.	(3-4)/8-9	OFF/8-9	OFF/OFF	(ON)/OFF/OFF ON/ON/OFF

NOTE: ( ) denotes momentary action.

Light Source Type

A. No Illumination
B. 6V Incandescent
C. 12V Incandescent
D. 24V Incandescent
E. 125VAC Neon
F. 250VAC Neon
G. 2V Red LED
H. 2V Green LED
J. 2V Amber LED
K. 6V Red LED
L. 6V Green LED
M. 6V Amber LED
N. 12V Red LED
P. 12V Green LED
Q. 12V Amber LED
R. 24V Red LED
S. 24V Green LED
T. 24V Amber LED

Light Circuit

	Circuit	Terminal Connections
A.	None	None
B.	Dep. in "A"	1(-) & 4(+)
C.	Dep. in "C"	2(+) & 5(-)
D.	Ind. in "A"	1(-) & 6(+)
E.	Ind. in "C"	5(-) & 10(+)
F.	Dep. in "A" Dep. in "C"	1(-) & 4(+) 2(+) & 5(-)
G.	Dep. in "A" Ind. in "C"	1(-) & 4(+) 5(-) & 10(+)
H.	Ind. in "A" Dep. in "C"	1(-) & 6(+) 2(+) & 5(-)
J.	Ind. in "A" Ind. in "C"	1(-) & 6(+) 5(-) & 10(+)

NOTE: Polarity only applies to LED circuits.

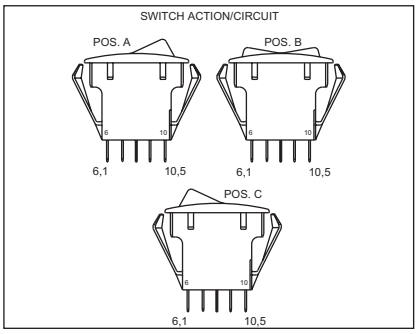

K3 PART NUMBER CODE - CONTINUED FROM ABOVE

– X X XX XX X X X

Lens Color

Position "A"	Position "C"
1. Transparent Red	**1.** Transparent Red
2. Transparent Green	**2.** Transparent Green
3. Transparent Amber ①	**3.** Transparent Amber ①
4. Clear ①	**4.** Clear ①
5. Translucent White ②	**5.** Translucent White ②
Z. No Lens ③	**Z.** No Lens ③

NOTE: It is not recommended to use green LEDs with translucent white lenses. This will reduce light intensity. Use clear lenses with green LEDs for maximum light intensity.

① Recommended for neon lamps.
② Special Order: Ultra bright green LED to be used with translucent white lenses.
③ Legend colors "B" & "D" are only available on lens color "Z".

STOP HERE for lighted switches without legends.

Example: K3AAIFNH-44

STOP HERE for unlighted switches without legends.

Example: K3AAIFAA

Legend Style

Position "A"	Position "C"
ZZ. No Legend	**ZZ.** No Legend

NOTE: For all other legend options, refer to the legend table on page 162, find the two digit code and enter the code in the appropriate position(s).

Legend Color

Position "A"	Position "C"
1. Red	**1.** Red
2. Black	**2.** Black
9. White	**9.** White
B. Backlight/ Daylight White ④	**B.** Backlight/ Daylight White ④
D. Backlight/ Deadfront ④	**D.** Backlight/ Deadfront ④
Z. No Legend	**Z.** No Legend

④ For legend color "B" and "D", please use button color "A" & "B" and lens color "Z" for each position.

Legend Orientation

	Position "A"	Position "C"
1. Std.	A	C
2. 90°	A	C
3. 180°	A	C
4. 270°	A	C

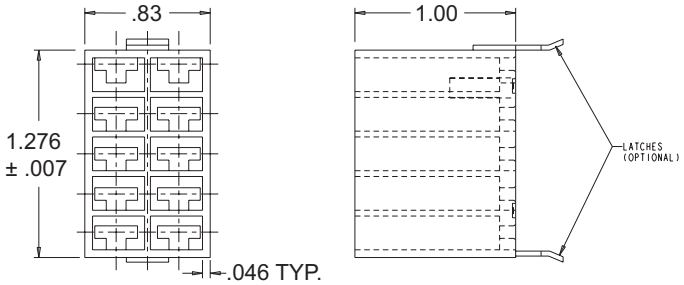

K3 Connector

P/N 801775-2A Without Latches
P/N 801775-2B With Latches

Panel Seal Gasket

P/N 807037

Order separately for use with switches without drain holes.

Panel Plug

See Panel Plug (PP) page 167.

• K3 panel plugs available as shown on page 160.

Recommended Quick Connect Terminals:
AMP 60253-2 for 12-16 AWG
AMP 42100-2 for 14-18 AWG

Specifications Subject To Change Without Notice

SEALED, ILLUMINATED ROCKER SWITCHES

SNAP-IN PANEL MOUNTING, ATTRACTIVE & RUGGED FOR WET & DUSTY ENVIRONMENTS

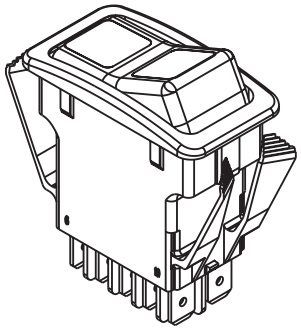

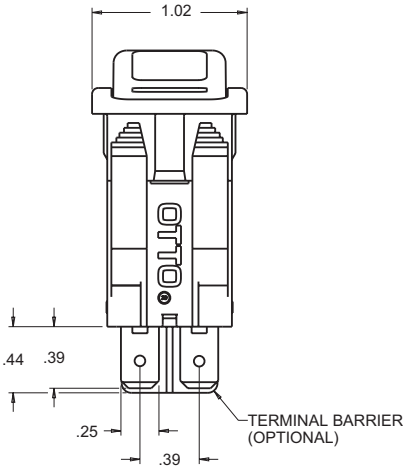

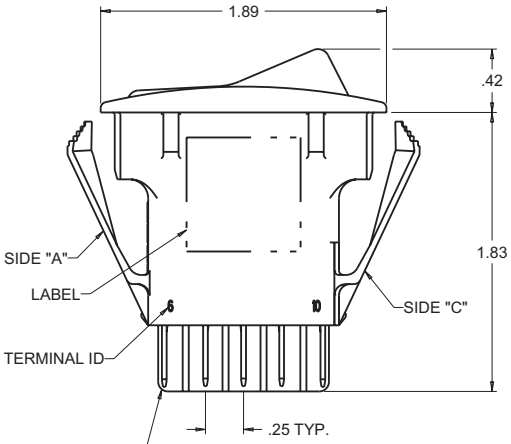

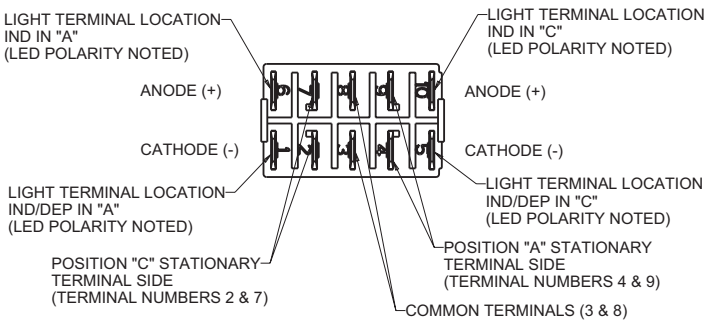

TERMINAL LOCATIONS AS VIEWED FROM
BOTTOM OF SWITCH (CASE REMOVED FOR CLARITY)
CONTACT MADE IN OPPOSITE DIRECTION OF ROCKER TRAVEL

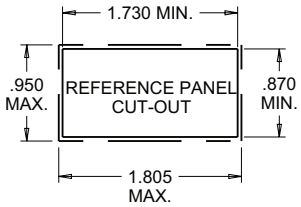

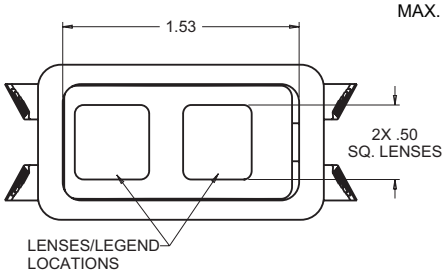

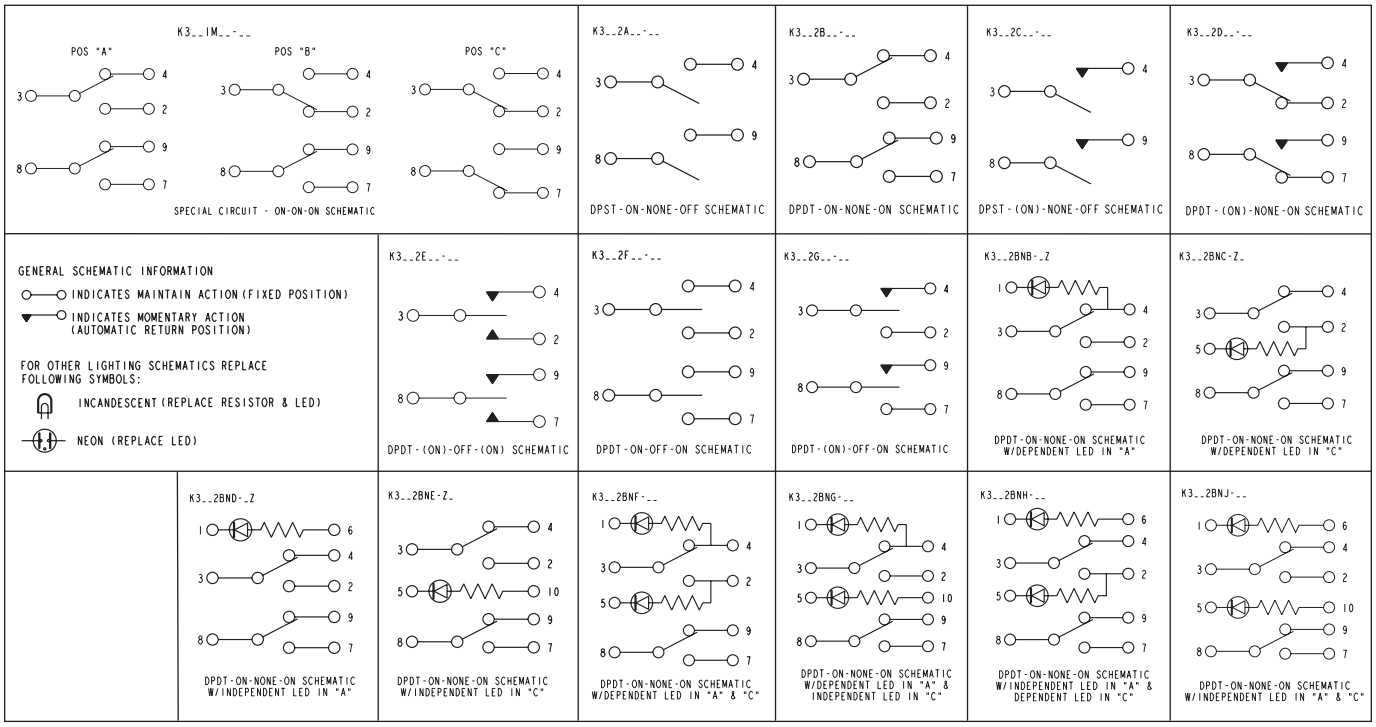

Компания «ЭлектроПласт» предлагает заключение долгосрочных отношений при поставках импортных электронных компонентов на взаимовыгодных условиях!

Наши преимущества:

- Оперативные поставки широкого спектра электронных компонентов отечественного и импортного производства напрямую от производителей и с крупнейших мировых складов;
- Поставка более 17-ти миллионов наименований электронных компонентов;
- Поставка сложных, дефицитных, либо снятых с производства позиций;
- Оперативные сроки поставки под заказ (от 5 рабочих дней);
- Экспресс доставка в любую точку России;
- Техническая поддержка проекта, помощь в подборе аналогов, поставка прототипов;
- Система менеджмента качества сертифицирована по Международному стандарту ISO 9001;
- Лицензия ФСБ на осуществление работ с использованием сведений, составляющих государственную тайну;
- Поставка специализированных компонентов (Xilinx, Altera, Analog Devices, Intersil, Interpoint, Microsemi, Aeroflex, Peregrine, Syfer, Eurofarad, Texas Instrument, Miteq, Cobham, E2V, MA-COM, Hittite, Mini-Circuits,General Dynamics и др.);

Помимо этого, одним из направлений компании «ЭлектроПласт» является направление «Источники питания». Мы предлагаем Вам помощь Конструкторского отдела:

- Подбор оптимального решения, техническое обоснование при выборе компонента;
- Подбор аналогов;
- Консультации по применению компонента;
- Поставка образцов и прототипов;
- Техническая поддержка проекта;
- Защита от снятия компонента с производства.

Как с нами связаться

Телефон: 8 (812) 309 58 32 (многоканальный)
Факс: 8 (812) 320-02-42
Электронная почта: org@eplast1.ru
Адрес: 198099, г. Санкт-Петербург, ул. Калинина, дом 2, корпус 4, литера А.