Freescale Semiconductor
Data Sheet: Technical Data

Document Number: MC9328MX1
Rev. 7, 12/2006

RoHS

MC9328MX1

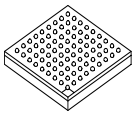

Package Information
Plastic Package
Case 1304B-01
(MAPBGA–225)

Ordering Information

See Table 1 on page 3

MC9328MX1

1 Introduction

The i.MX Family of applications processors provides a leap in performance with an ARM9™ microprocessor core and highly integrated system functions. The i.MX family specifically addresses the requirements of the personal, portable product market by providing intelligent integrated peripherals, an advanced processor core, and power management capabilities.

The MC9328MX1 (i.MX1) processor features the advanced and power-efficient ARM920T™ core that operates at speeds up to 200 MHz. Integrated modules, which include a USB device, an LCD controller, and an MMC/SD host controller, support a suite of peripherals to enhance portable products seeking to provide a rich multimedia experience. It is packaged in a 256-contact Mold Array Process-Ball Grid Array (MAPBGA). Figure 1 shows the functional block diagram of the i.MX1 processor.

Contents

1 Introduction 1
2 Signals and Connections 4
3 Electrical Characteristics 22
4 Functional Description and Application Information 25
5 Pin-Out and Package Information 96
6 Product Documentation 98
Contact Information . . . . . Last Page

ARM POWERED

Freescale reserves the right to change the detail specifications as may be required to permit improvements in the design of its products.
© Freescale Semiconductor, Inc., 2004, 2005, 2006. All rights reserved.

freescale semiconductor

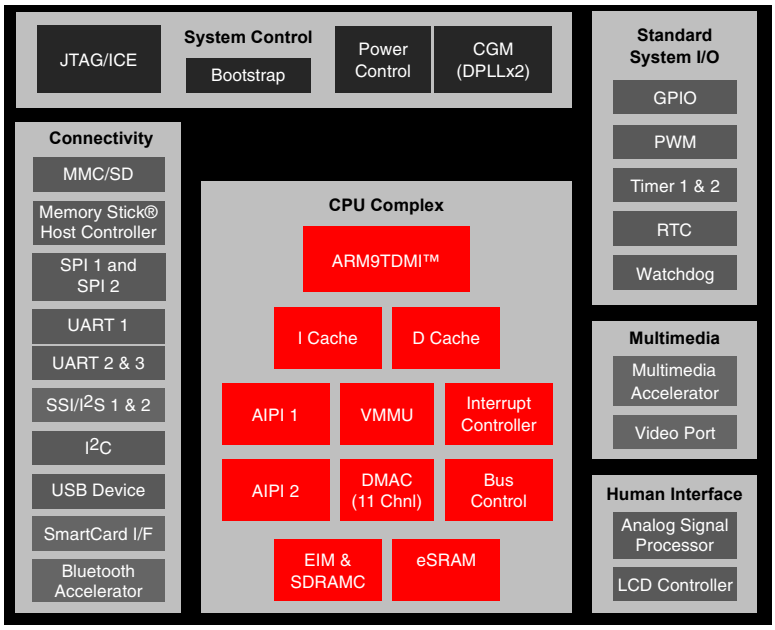

Figure 1. i.MX1 Functional Block Diagram

1.1 Features

To support a wide variety of applications, the processor offers a robust array of features, including the following:

- ARM920T™ Microprocessor Core
- AHB to IP Bus Interfaces (AIPIs)
- External Interface Module (EIM)
- SDRAM Controller (SDRAMC)
- DPLL Clock and Power Control Module
- Three Universal Asynchronous Receiver/Transmitters (UART 1, UART 2, and UART3)
- Two Serial Peripheral Interfaces (SPI1 and SPI2)
- Two General-Purpose 32-bit Counters/Timers
- Watchdog Timer
- Real-Time Clock/Sampling Timer (RTC)
- LCD Controller (LCDC)
- Pulse-Width Modulation (PWM) Module
- Universal Serial Bus (USB) Device
- Multimedia Card and Secure Digital (MMC/SD) Host Controller Module
- Memory Stick® Host Controller (MSHC)
- Direct Memory Access Controller (DMAC)
- Two Synchronous Serial Interfaces and an Inter-IC Sound (SSI1 and SSI2/I^2S) Module
- Inter-IC (I^2C) Bus Module
- Video Port

- General-Purpose I/O (GPIO) Ports
- Bootstrap Mode
- Analog Signal Processing (ASP) Module
- Bluetooth™ Accelerator (BTA)
- Multimedia Accelerator (MMA)
- Power Management Features
- Operating Voltage Range: 1.7 V to 1.9 V core, 1.7 V to 3.3 V I/O
- 256-pin MAPBGA Package

1.2 Target Applications

The i.MX1 processor is targeted for advanced information appliances, smart phones, Web browsers, based on the popular Palm OS platform, and messaging applications such as wireless cellular products, including the Accompli^{TM} 008 GSM/GPRS interactive communicator.

1.3 Ordering Information

Table 1 provides ordering information.

Table 1. Ordering Information

Package Type	Frequency	Temperature	Solderball Type	Order Number
256-lead MAPBGA	200 MHz	0°C to 70°C	Pb-free	MC9328MX1VM20(R2)
		-30°C to 70°C	Pb-free	MC9328MX1DVM20(R2)
	150 MHz	0°C to 70°C	Pb-free	MC9328MX1VM15(R2)
		-30°C to 70°C	Pb-free	MC9328MX1DVM15(R2)
		-40°C to 85°C	Pb-free	MC9328MX1CVM15(R2)

1.4 Conventions

This document uses the following conventions:

- $\overline{\text{OVERBAR}}$ is used to indicate a signal that is active when pulled low: for example, $\overline{\text{RESET}}$.
- *Logic level one* is a voltage that corresponds to Boolean true (1) state.
- *Logic level zero* is a voltage that corresponds to Boolean false (0) state.
- To *set* a bit or bits means to establish logic level one.
- To *clear* a bit or bits means to establish logic level zero.
- A *signal* is an electronic construct whose state conveys or changes in state convey information.
- A *pin* is an external physical connection. The same pin can be used to connect a number of signals.
- *Asserted* means that a discrete signal is in active logic state.
  - *Active low* signals change from logic level one to logic level zero.
  - *Active high* signals change from logic level zero to logic level one.

- *Negated* means that an asserted discrete signal changes logic state.
  - *Active low* signals change from logic level zero to logic level one.
  - *Active high* signals change from logic level one to logic level zero.
- LSB means *least significant bit* or *bits*, and MSB means *most significant bit* or *bits*. References to low and high bytes or words are spelled out.
- Numbers preceded by a percent sign (%) are binary. Numbers preceded by a dollar sign ($) or *0x* are hexadecimal.

2 Signals and Connections

Table 2 identifies and describes the i.MX1 processor signals that are assigned to package pins. The signals are grouped by the internal module that they are connected to.

Table 2. i.MX1 Signal Descriptions

Signal Name	Function/Notes
External Bus/Chip-Select (EIM)	
A[24:0]	Address bus signals
D[31:0]	Data bus signals
$\overline{EB0}$	MSB Byte Strobe—Active low external enable byte signal that controls D [31:24].
$\overline{EB1}$	Byte Strobe—Active low external enable byte signal that controls D [23:16].
$\overline{EB2}$	Byte Strobe—Active low external enable byte signal that controls D [15:8].
$\overline{EB3}$	LSB Byte Strobe—Active low external enable byte signal that controls D [7:0].
$\overline{OE}$	Memory Output Enable—Active low output enables external data bus.
$\overline{CS}$ [5:0]	Chip-Select—The chip-select signals $\overline{CS}$ [3:2] are multiplexed with $\overline{CSD}$ [1:0] and are selected by the Function Multiplexing Control Register (FMCR). By default $\overline{CSD}$ [1:0] is selected.
$\overline{ECB}$	Active low input signal sent by a flash device to the EIM whenever the flash device must terminate an on-going burst sequence and initiate a new (long first access) burst sequence.
$\overline{LBA}$	Active low signal sent by a flash device causing the external burst device to latch the starting burst address.
BCLK (burst clock)	Clock signal sent to external synchronous memories (such as burst flash) during burst mode.
$\overline{RW}$	$\overline{RW}$ signal—Indicates whether external access is a read (high) or write (low) cycle. Used as a $\overline{WE}$ input signal by external DRAM.
$\overline{DTACK}$	$\overline{DTACK}$ signal—The external input data acknowledge signal. When using the external DTACK signal as a data acknowledge signal, the bus time-out monitor generates a bus error when a bus cycle is not terminated by the external DTACK signal after 1022 clock counts have elapsed.
Bootstrap	
BOOT [3:0]	System Boot Mode Select—The operational system boot mode of the i.MX1 processor upon system reset is determined by the settings of these pins.
SDRAM Controller	
SDBA [4:0]	SDRAM non-interleave mode bank address multiplexed with address signals A [15:11]. These signals are logically equivalent to core address p_addr [25:21] in SDRAM cycles.

Table 2. i.MX1 Signal Descriptions (Continued)

Signal Name	Function/Notes
SDIBA [3:0]	SDRAM interleave addressing mode bank address multiplexed with address signals A [19:16]. These signals are logically equivalent to core address p_addr [12:9] in SDRAM cycles.
MA [11:10]	SDRAM address signals
MA [9:0]	SDRAM address signals which are multiplexed with address signals A [10:1]. MA [9:0] are selected on SDRAM cycles.
DQM [3:0]	SDRAM data enable
$\overline{\text{CSD0}}$	SDRAM Chip-select signal which is multiplexed with the $\overline{\text{CS2}}$ signal. These two signals are selectable by programming the system control register.
$\overline{\text{CSD1}}$	SDRAM Chip-select signal which is multiplexed with $\overline{\text{CS3}}$ signal. These two signals are selectable by programming the system control register. By default, $\overline{\text{CSD1}}$ is selected, so it can be used as boot chip-select by properly configuring BOOT [3:0] input pins.
$\overline{\text{RAS}}$	SDRAM Row Address Select signal
$\overline{\text{CAS}}$	SDRAM Column Address Select signal
$\overline{\text{SDWE}}$	SDRAM Write Enable signal
SDCKE0	SDRAM Clock Enable 0
SDCKE1	SDRAM Clock Enable 1
SDCLK	SDRAM Clock
$\overline{\text{RESET_SF}}$	Not Used
Clocks and Resets	
EXTAL16M	Crystal input (4 MHz to 16 MHz), or a 16 MHz oscillator input when the internal oscillator circuit is shut down.
XTAL16M	Crystal output
EXTAL32K	32 kHz crystal input
XTAL32K	32 kHz crystal output
CLKO	Clock Out signal selected from internal clock signals.
$\overline{\text{RESET_IN}}$	Master Reset—External active low Schmitt trigger input signal. When this signal goes active, all modules (except the reset module and the clock control module) are reset.
$\overline{\text{RESET_OUT}}$	Reset Out—Internal active low output signal from the Watchdog Timer module and is asserted from the following sources: Power-on reset, External reset ($\overline{\text{RESET_IN}}$), and Watchdog time-out.
POR	Power On Reset—Internal active high Schmitt trigger input signal. The POR signal is normally generated by an external RC circuit designed to detect a power-up event.
JTAG	
$\overline{\text{TRST}}$	Test Reset Pin—External active low signal used to asynchronously initialize the JTAG controller.
$\overline{\text{TDO}}$	Serial Output for test instructions and data. Changes on the falling edge of TCK.
TDI	Serial Input for test instructions and data. Sampled on the rising edge of TCK.
TCK	Test Clock to synchronize test logic and control register access through the JTAG port.
TMS	Test Mode Select to sequence the JTAG test controller's state machine. Sampled on the rising edge of TCK.

Table 2. i.MX1 Signal Descriptions (Continued)

Signal Name	Function/Notes
DMA	
$\overline{\text{DMA_REQ}}$	$\overline{\text{DMA Request}}$—external DMA request signal. Multiplexed with SPI1_SPI_RDY.
BIG_ENDIAN	Big Endian—Input signal that determines the configuration of the external chip-select space. If it is driven logic-high at reset, the external chip-select space will be configured to big endian. If it is driven logic-low at reset, the external chip-select space will be configured to little endian. This input must not change state after power-on reset negates or during chip operation.
ETM	
ETMTRACESYNC	ETM sync signal which is multiplexed with A24. ETMTRACESYNC is selected in ETM mode.
ETMTRACECLK	ETM clock signal which is multiplexed with A23. ETMTRACECLK is selected in ETM mode.
ETMPIPESTAT [2:0]	ETM status signals which are multiplexed with A [22:20]. ETMPIPESTAT [2:0] are selected in ETM mode.
ETMTRACEPKT [7:0]	ETM packet signals which are multiplexed with $\overline{\text{ECB}}$, $\overline{\text{LBA}}$, BCLK (burst clock), PA17, A [19:16]. ETMTRACEPKT [7:0] are selected in ETM mode.
CMOS Sensor Interface	
CSI_D [7:0]	Sensor port data
CSI_MCLK	Sensor port master clock
CSI_VSYNC	Sensor port vertical sync
CSI_HSYNC	Sensor port horizontal sync
CSI_PIXCLK	Sensor port data latch clock
LCD Controller	
LD [15:0]	LCD Data Bus—All LCD signals are driven low after reset and when LCD is off.
FLM/VSYNC	Frame Sync or Vsync—This signal also serves as the clock signal output for the gate driver (dedicated signal SPS for Sharp panel HR-TFT).
LP/HSYNC	Line pulse or H sync
LSCLK	Shift clock
ACD/OE	Alternate crystal direction/output enable.
CONTRAST	This signal is used to control the LCD bias voltage as contrast control.
SPL_SPR	Program horizontal scan direction (Sharp panel dedicated signal).
PS	Control signal output for source driver (Sharp panel dedicated signal).
CLS	Start signal output for gate driver. This signal is an inverted version of PS (Sharp panel dedicated signal).
REV	Signal for common electrode driving signal preparation (Sharp panel dedicated signal).
SIM	
SIM_CLK	SIM Clock
SIM_RST	SIM Reset
SIM_RX	Receive Data

Table 2. i.MX1 Signal Descriptions (Continued)

Signal Name	Function/Notes
SIM_TX	Transmit Data
SIM_PD	Presence Detect Schmitt trigger input
SIM_SVEN	SIM Vdd Enable
SPI 1 and SPI 2	
SPI1_MOSI	Master Out/Slave In
SPI1_MISO	Slave In/Master Out
SPI1_$\overline{SS}$	Slave Select (Selectable polarity)
SPI1_SCLK	Serial Clock
SPI1_$\overline{SPI_RDY}$	Serial Data Ready
SPI2_TXD	SPI2 Master TxData Output—This signal is multiplexed with a GPI/O pin yet shows up as a primary or alternative signal in the signal multiplex scheme table. Please refer to the SPI and GPIO chapters in the *MC9328MX1 Reference Manual* for information about how to bring this signal to the assigned pin.
SPI2_RXD	SPI2 Master RxData Input—This signal is multiplexed with a GPI/O pin yet shows up as a primary or alternative signal in the signal multiplex scheme table. Please refer to the SPI and GPIO chapters in the *MC9328MX1 Reference Manual* for information about how to bring this signal to the assigned pin.
SPI2_$\overline{SS}$	SPI2 Slave Select—This signal is multiplexed with a GPI/O pin yet shows up as a primary or alternative signal in the signal multiplex scheme table. Please refer to the SPI and GPIO chapters in the *MC9328MX1 Reference Manual* for information about how to bring this signal to the assigned pin.
SPI2_SCLK	SPI2 Serial Clock—This signal is multiplexed with a GPI/O pin yet shows up as a primary or alternative signal in the signal multiplex scheme table. Please refer to the SPI and GPIO chapters in the *MC9328MX1 Reference Manual* for information about how to bring this signal to the assigned pin.
General Purpose Timers	
TIN	Timer Input Capture or Timer Input Clock—The signal on this input is applied to both timers simultaneously.
TMR2OUT	Timer 2 Output
USB Device	
USBD_VMO	USB Minus Output
USBD_VPO	USB Plus Output
USBD_VM	USB Minus Input
USBD_VP	USB Plus Input
USBD_SUSPND	USB Suspend Output
USBD_RCV	USB Receive Data
$\overline{USBD_ROE}$	USB $\overline{OE}$
USBD_AFE	USB Analog Front End Enable
Secure Digital Interface	
SD_CMD	SD Command—If the system designer does not wish to make use of the internal pull-up, via the Pull-up enable register, a 4.7K–69K external pull up resistor must be added.

Table 2. i.MX1 Signal Descriptions (Continued)

Signal Name	Function/Notes
SD_CLK	MMC Output Clock
SD_DAT [3:0]	Data—If the system designer does not wish to make use of the internal pull-up, via the Pull-up enable register, a 50K–69K external pull up resistor must be added.
Memory Stick Interface	
MS_BS	Memory Stick Bus State (Output)—Serial bus control signal
MS_SDIO	Memory Stick Serial Data (Input/Output)
MS_SCLKO	Memory Stick Serial Clock (Input)—Serial protocol clock source for SCLK Divider
MS_SCLKI	Memory Stick External Clock (Output)—Test clock input pin for SCLK divider. This pin is only for test purposes, not for use in application mode.
MS_PI0	General purpose Input0—Can be used for Memory Stick Insertion/Extraction detect
MS_PI1	General purpose Input1—Can be used for Memory Stick Insertion/Extraction detect
UARTs – IrDA/Auto-Bauding	
UART1_RXD	Receive Data
UART1_TXD	Transmit Data
$\overline{\text{UART1_RTS}}$	Request to Send
$\overline{\text{UART1_CTS}}$	Clear to Send
UART2_RXD	Receive Data
UART2_TXD	Transmit Data
$\overline{\text{UART2_RTS}}$	Request to Send
$\overline{\text{UART2_CTS}}$	Clear to Send
$\overline{\text{UART2_DSR}}$	Data Set Ready
$\overline{\text{UART2_RI}}$	Ring Indicator
$\overline{\text{UART2_DCD}}$	Data Carrier Detect
$\overline{\text{UART2_DTR}}$	Data Terminal Ready
UART3_RXD	Receive Data
UART3_TXD	Transmit Data
$\overline{\text{UART3_RTS}}$	Request to Send
$\overline{\text{UART3_CTS}}$	Clear to Send
$\overline{\text{UART3_DSR}}$	Data Set Ready
$\overline{\text{UART3_RI}}$	Ring Indicator
$\overline{\text{UART3_DCD}}$	Data Carrier Detect
$\overline{\text{UART3_DTR}}$	Data Terminal Ready
Serial Audio Port – SSI (configurable to I^2S protocol)	
SSI_TXDAT	Transmit Data
SSI_RXDAT	Receive Data

Table 2. i.MX1 Signal Descriptions (Continued)

Signal Name	Function/Notes
SSI_TXCLK	Transmit Serial Clock
SSI_RXCLK	Receive Serial Clock
SSI_TXFS	Transmit Frame Sync
SSI_RXFS	Receive Frame Sync
SSI2_TXDAT	TxD
SSI2_RXDAT	RxD
SSI2_TXCLK	Transmit Serial Clock
SSI2_RXCLK	Receive Serial Clock
SSI2_TXFS	Transmit Frame Sync
SSI2_RXFS	Receive Frame Sync
I^2C	
I2C_SCL	I^2C Clock
I2C_SDA	I^2C Data
PWM	
PWMO	PWM Output
ASP	
UIN	Positive U analog input (for low voltage, temperature measurement)
UIP	Negative U analog input (for low voltage, temperature measurement)
PX1	Positive pen-X analog input
PY1	Positive pen-Y analog input
PX2	Negative pen-X analog input
PY2	Negative pen-Y analog input
R1A	Positive resistance input (a)
R1B	Positive resistance input (b)
R2A	Negative resistance input (a)
R2B	Negative resistance input (b)
RVP	Positive reference for pen ADC
RVM	Negative reference for pen ADC
AVDD	Analog power supply
AGND	Analog ground
BlueTooth	
BT1	I/O clock signal
BT2	Output
BT3	Input

Table 2. i.MX1 Signal Descriptions (Continued)

Signal Name	Function/Notes
BT4	Input
BT5	Output
BT6	Output
BT7	Output
BT8	Output
BT9	Output
BT10	Output
BT11	Output
BT12	Output
BT13	Output
BTRF VDD	Power supply from external BT RFIC
BTRF GND	Ground from external BT RFIC
Test Function	
TRISTATE	Forces all I/O signals to high impedance for test purposes. For normal operation, terminate this input with a 1 k ohm resistor to ground. (TRI-STATE® is a registered trademark of National Semiconductor.)
Digital Supply Pins	
NVDD	Digital Supply for the I/O pins
NVSS	Digital Ground for the I/O pins
Supply Pins – Analog Modules	
AVDD	Supply for analog blocks
Internal Power Supply	
QVDD	Power supply pins for silicon internal circuitry
QVSS	Ground pins for silicon internal circuitry

2.1 I/O Pads Power Supply and Signal Multiplexing Scheme

This section describes detailed information about both the power supply for each I/O pin and its function multiplexing scheme. The user can reference information provided in Table 6 on page 23 to configure the power supply scheme for each device in the system (memory and external peripherals). The function multiplexing information also shown in Table 6 allows the user to select the function of each pin by configuring the appropriate GPIO registers when those pins are multiplexed to provide different functions.

Table 3. MC9328MX1 Signal Multiplexing Scheme

I/O Supply Voltage	BGA Pin	Primary			Alternate		GPIO					RESE State (At/After)	Default
		Signal	Dir	Pull-up	Signal	Dir	Mux	Pull-up	Ain	Bin	Aout		
NVDD1	K8	NVDD1	Static										
NVDD1	B1	A24	O		ETMTRACESYNC	O	PA0	69K	SPI2_CLK			L	A24
NVDD1	C2	D31	I/O	69K								Pull-H	
NVDD1	C1	A23	O		ETMTRACECLK	O	PA31	69K				L	A23
NVDD1	D2	D30	I/O	69K								Pull-H	
NVDD1	D1	A22	O		ETMPIPESTAT2	O	PA30	69K				L	A22
NVDD1	D3	D29	I/O	69K								Pull-H	
NVDD1	E2	A21	O		ETMPIPESTAT1	O	PA29	69K				L	A21
NVDD1	E3	D28	I/O	69K								Pull-H	
NVDD1	E1	A20	O		ETMPIPESTAT0	O	PA28	69K				L	A20
NVDD1	F2	D27	I/O	69K								Pull-H	
NVDD1	F4	A19	O		ETMTRACEPKT3	O	PA27	69K				L	A19
NVDD1	E4	D26	I/O	69K								Pull-H	
	A1	VSS	Static										
NVDD1	H5	NVDD1	Static										
NVDD1	F1	A18	O		ETMTRACEPKT2	O	PA26	69K				L	A18
NVDD1	F3	D25	I/O	69K								Pull-H	
NVDD1	G2	A17	O		ETMTRACEPKT1	O	PA25	69K				L	A17
NVDD1	G3	D24	I/O	69K								Pull-H	
NVDD1	F5	A16	O		ETMTRACEPKT0	O	PA24	69K				L	A16
NVDD1	G4	D23	I/O	69K								Pull-H	
NVDD1	G1	A15	O									L	
NVDD1	H2	D22	I/O	69K								Pull-H	
NVDD1	H3	A14	O									L	

Table 3. MC9328MX1 Signal Multiplexing Scheme (Continued)

I/O Supply Voltage	BGA Pin	Primary			Alternate		GPIO					RESE State (At/After)	Default
		Signal	Dir	Pull-up	Signal	Dir	Mux	Pull-up	Ain	Bin	Aout		
NVDD1	G5	D21	I/O	69K								Pull-H	
NVDD1	H1	A13	O									L	
NVDD1	H4	D20	I/O	69K								Pull-H	
	T1	VSS	Static										
QVDD1	H9	QVDD1	Static										
	H8	VSS	Static										
NVDD1	J5	NVDD1	Static										
NVDD1	J1	A12	O									L	
NVDD1	J4	D19	I/O	69K								Pull-H	
NVDD1	J2	A11	O									L	
NVDD1	J3	D18	I/O	69K								Pull-H	
NVDD1	K1	A10	O									L	
NVDD1	K4	D17	I/O	69K								Pull-H	
NVDD1	K3	A9	O									L	
NVDD1	K2	D16	I/O	69K								Pull-H	
NVDD1	L1	A8	O									L	
NVDD1	L4	D15	I/O	69K								Pull-H	
NVDD1	L2	A7	O									L	
NVDD1	L5	D14	I/O	69K								Pull-H	
	K6	VSS	Static										
NVDD1	K5	NVDD1	Static										
NVDD1	M4	A6	O									L	
NVDD1	L3	D13	I/O	69K								Pull-H	
NVDD1	M1	A5	O									L	
NVDD1	M2	D12	I/O	69K								Pull-H	

Table 3. MC9328MX1 Signal Multiplexing Scheme (Continued)

I/O Supply Voltage	BGA Pin	Primary			Alternate		GPIO					RESE State (At/After)	Default
		Signal	Dir	Pull-up	Signal	Dir	Mux	Pull-up	Ain	Bin	Aout		
NVDD1	N1	A4	O									L	
NVDD1	M3	D11	I/O	69K								Pull-H	
NVDD1	P3	$\overline{EB0}$	O									H	
NVDD1	N3	D10	I/O	69K								Pull-H	
NVDD1	P1	A3	O									L	
NVDD1	N2	$\overline{EB1}$	O									H	
NVDD1	P2	D9	I/O	69K								Pull-H	
NVDD1	R1	$\overline{EB2}$	O									H	
	M6	VSS	Static										
NVDD1	H6	NVDD1	Static										
NVDD1	T2	A2	O									L	
NVDD1	R2	$\overline{EB3}$	O									H	
NVDD1	R5	D8	I/O	69K								Pull-H	
NVDD1	T3	$\overline{OE}$	O									H	
NVDD1	R3	A1	O									L	
NVDD1	T4	$\overline{CS5}$	O				PA23	69K				Pull-H	PA23
NVDD1	N4	D7	I/O	69K								Pull-H	
NVDD1	R4	$\overline{CS4}$	O				PA22	69K				Pull-H	PA22
NVDD1	N5	A0	O				PA21	69K				L	A0
NVDD1	P4	$\overline{CS3}$	O		$\overline{CSD1}$							H	$\overline{CSD1}$
NVDD1	P5	D6	I/O	69K								Pull-H	
NVDD1	T5	$\overline{CS2}$	O		$\overline{CSD0}$							H	$\overline{CSD0}$
	H7	VSS	Static										
NVDD1	J6	NVDD1	Static										
NVDD1	M5	SDCLK	O									H	

Table 3. MC9328MX1 Signal Multiplexing Scheme (Continued)

I/O Supply Voltage	BGA Pin	Primary			Alternate		GPIO					RESE State (At/After)	Default
		Signal	Dir	Pull-up	Signal	Dir	Mux	Pull-up	Ain	Bin	Aout		
NVDD1	T6	$\overline{CS1}$	O									H	
NVDD1	T7	$\overline{CS0}$	O									H[1]	
NVDD1	R6	D5	I/O	69K								Pull-H	
NVDD1	P6	$\overline{ECB}$	I		ETMTRACEPKT7		PA20	69K				Pull-H	$\overline{ECB}$
NVDD1	N6	D4	I/O	69K								Pull-H	
NVDD1	R7	$\overline{LBA}$	O		ETMTRACEPKT6		PA19	69K				H	$\overline{LBA}$
NVDD1	P8	D3	I/O	69K								Pull-H	
NVDD1	R8	BCLK			ETMTRACEPKT5		PA18	69K				L	BCLK
NVDD1	P7	D2	I/O	69K								Pull-H	
	J7	VSS	Static										
NVDD1	L6	NVDD1	Static										
NVDD1	N7	DTACK	I		ETMTRACEPKT4		PA17	69K	SPI2_SS	A25		Pull-H	PA17
NVDD1	N8	D1	I/O	69K								Pull-H	
NVDD1	M7	$\overline{RW}$										H	
NVDD1	T8	MA11	O									L	
NVDD1	M8	MA10	O									L	
NVDD1	R9	D0	I/O	69K								Pull-H	
	K7	VSS	Static										
NVDD1	P9	DQM3	O									L	
NVDD1	T9	DQM2	O									L	
NVDD1	N9	DQM1	O									L	
NVDD1	R10	DQM0	O									L	
NVDD1	M9	$\overline{RAS}$	O									H	
NVDD1	L8	$\overline{CAS}$	O									H	
NVDD1	J8	NVDD1	Static										

Table 3. MC9328MX1 Signal Multiplexing Scheme (Continued)

I/O Supply Voltage	BGA Pin	Primary			Alternate		GPIO					RESE State (At/After)	Default
		Signal	Dir	Pull-up	Signal	Dir	Mux	Pull-up	Ain	Bin	Aout		
NVDD1	T10	$\overline{\text{SDWE}}$	O									H	
NVDD1	R11	SDCKE0	O									H	
NVDD1	P10	SDCKE1	O									H	
NVDD1	N10	$\overline{\text{RESET_SF}}$	O									L/H	
NVDD1	T11	CLKO	O									L	
	L7	VSS	Static										
AVDD1	T12	AVDD1	Static										
AVDD1	M10	$\overline{\text{RESET_IN}}$	I	69K								L/H[2]	
AVDD1	N11	$\overline{\text{RESET_OUT}}$	O									L/H	
AVDD1	R12	POR	I									H/L[2]	
AVDD1	M11	BIG_ENDIAN	I									Hiz[3]	
AVDD1	P11	BOOT3	I									Hiz[4]	
AVDD1	N12	BOOT2	I									Hiz[4]	
AVDD1	R13	BOOT1	I									Hiz[4]	
AVDD1	P12	BOOT0	I									Hiz[4]	
AVDD1	T13	TRISTATE	I									Hiz[4]	
AVDD1	P13	$\overline{\text{TRST}}$	I	69K								H	
QVDD2	R15	QVDD2	Static										
	T16	VSS	Static										
AVDD1	T14	EXTAL16M	I									Hiz	
AVDD1	T15	XTAL16M	O										
AVDD1	R16	EXTAL32K	I									Hiz	
AVDD1	P16	XTAL32K	O										
NVDD2	K10	NVDD2	Static										

Table 3. MC9328MX1 Signal Multiplexing Scheme (Continued)

I/O Supply Voltage	BGA Pin	Primary			Alternate		GPIO					RESE State (At/After)	Default
		Signal	Dir	Pull-up	Signal	Dir	Mux	Pull-up	Ain	Bin	Aout		
NVDD2	R14	$\overline{TDO}$	O									Hiz[5]	
NVDD2	N15	TMS	I	69K								Pull-H	
NVDD2	L9	TCK	I	69K								Pull-H	
NVDD2	N16	TDI	I	69K								Pull-H	
NVDD2	P14	I2C_SCL	O				PA16	69K				Pull-H	PA16
NVDD2	P15	I2C_SDA	I/O				PA15	69K				Pull-H	PA15
NVDD2	N13	CSI_PIXCLK	I				PA14	69K				Pull-H	PA14
NVDD2	M13	CSI_HSYNC	I				PA13	69K				Pull-H	PA13
NVDD2	M14	CSI_VSYNC	I				PA12	69K				Pull-H	PA12
NVDD2	N14	CSI_D7	I				PA11	69K				Pull-H	PA11
NVDD2	M15	CSI_D6	I				PA10	69K				Pull-H	PA10
NVDD2	M16	CSI_D5	I				PA9	69K				Pull-H	PA9
NVDD2	J10	VSS	Static										
NVDD2	M12	CSI_D4	I				PA8	69K				Pull-H	PA8
NVDD2	L16	CSI_D3	I				PA7	69K				Pull-H	PA7
NVDD2	L15	CSI_D2	I				PA6	69K				Pull-H	PA6
NVDD2	L14	CSI_D1	I				PA5	69K				Pull-H	PA5
NVDD2	L13	CSI_D0	I				PA4	69K				Pull-H	PA4
NVDD2	L12	CSI_MCLK	O				PA3	69K				Pull-H	PA3
NVDD2	L11	PWMO	O				PA2	69K				Pull-H	PA2
NVDD2	L10	TIN	I				PA1	69K			SPI2_RxD	Pull-H	PA1
NVDD2	K15	TMR2OUT	O				PD31	69K	SPI2_TxD			Pull-H	PD31
NVDD2	K16	LD15	O				PD30	69K				Pull-H	PD30
NVDD2	K14	LD14	O				PD29	69K				Pull-H	PD29
NVDD2	K13	LD13	O				PD28	69K				Pull-H	PD28

Table 3. MC9328MX1 Signal Multiplexing Scheme (Continued)

I/O Supply Voltage	BGA Pin	Primary			Alternate		GPIO					RESE State (At/After)	Default
		Signal	Dir	Pull-up	Signal	Dir	Mux	Pull-up	Ain	Bin	Aout		
NVDD2	K12	LD12	O				PD27	69K				Pull-H	PD27
QVDD3	J15	QVDD3	Static										
	J16	VSS	Static										
NVDD2	K9	NVDD2	Static										
NVDD2	J14	LD11	O				PD26	69K				Pull-H	PD26
NVDD2	K11	LD10	O				PD25	69K				Pull-H	PD25
NVDD2	H15	LD9	O				PD24	69K				Pull-H	PD24
NVDD2	J13	LD8	O				PD23	69K				Pull-H	PD23
NVDD2	J12	LD7	O				PD22	69K				Pull-H	PD22
NVDD2	J11	LD6	O				PD21	69K				Pull-H	PD21
NVDD2	H14	LD5	O				PD20	69K				Pull-H	PD20
NVDD2	H13	LD4	O				PD19	69K				Pull-H	PD19
NVDD2	H16	LD3	O				PD18	69K				Pull-H	PD18
NVDD2	H12	LD2	O				PD17	69K				Pull-H	PD17
NVDD2	G16	LD1	O				PD16	69K				Pull-H	PD16
NVDD2	H11	LD0	O				PD15	69K				Pull-H	PD15
NVDD2	G15	FLM/VSYNC	O				PD14	69K				Pull-H	PD14
NVDD2	G14	LP/HSYNC	O				PD13	69K				Pull-H	PD13
NVDD2	G13	ACD/OE	O				PD12	69K				Pull-H	PD12
NVDD2	G12	CONTRAST	O				PD11	69K		SPI2_SS2		Pull-H	PD11
NVDD2	F16	SPL_SPR	O		$\overline{\text{UART2_DSR}}$	O	PD10	69K	SPI2_TxD			Pull-H	PD10
NVDD2	H10	PS	O		$\overline{\text{UART2_RI}}$	O	PD9	69K			SPI2_RxD	Pull-H	PD9
NVDD2	G11	CLS	O		$\overline{\text{UART2_DCD}}$	O	PD8	69K	SPI2_SS			Pull-H	PD8
NVDD2	F12	REV	O		$\overline{\text{UART2_DTR}}$	I	PD7	69K	SPI2_CLK			Pull-H	PD7
NVDD2	F15	LSCLK	O				PD6	69K				Pull-H	PD6

Table 3. MC9328MX1 Signal Multiplexing Scheme (Continued)

I/O Supply Voltage	BGA Pin	Primary			Alternate		GPIO					RESE State (At/After)	Default
		Signal	Dir	Pull-up	Signal	Dir	Mux	Pull-up	Ain	Bin	Aout		
	J9	VSS	Static										
QVDD[6]	E16	R2A	I									qvdd	
QVDD[6]	D16	R2B	I										
QVDD[6]	F14	PX1	I										
QVDD[6]	F13	PY1	I										
QVDD[6]	E15	PX2	I										
QVDD[6]	E14	PY2	I										
QVDD[6]	D15	R1A	I										
QVDD[6]	C16	R1B	I										
	C15	VSS	Static										
AVDD2[6]	C14	AVDD2	Static										
QVDD[6]	B16	NC	I										
QVDD[6]	A16	NC	I										
QVDD[6]	B15	UIN	I										
QVDD[6]	A15	UIP	I										
QVDD[6]	E13	NC	I										
QVDD[6]	D14	NC	I										
QVDD[6]	B14	RVM	I										
QVDD[6]	A14	RVP	I										
QVDD[6]	D13	NC	I										
QVDD[6]	C13	NC	I										
QVDD[6]	E12	NC	O										

Table 3. MC9328MX1 Signal Multiplexing Scheme (Continued)

I/O Supply Voltage	BGA Pin	Primary			Alternate		GPIO					RESE State (At/After)	Default
		Signal	Dir	Pull-up	Signal	Dir	Mux	Pull-up	Ain	Bin	Aout		
QVDD[6]	D12	NC	O										
QVDD4	A13	QVDD4	Static										
	B13	VSS	Static										
BTRFVDD	C12	BTRFVDD	Static										
BTRFVDD	B12	BT1	I				PC31	69K			UART3_RX	Pull-H	PC31
BTRFVDD	F11	BT2	O				PC30	69K		UART3_TX		Hiz	PC30
BTRFVDD	A12	BT3	I				PC29	69K			UART3_RTS	Pull-H	PC29
BTRFVDD	E11	BT4	I				PC28	69K		UART3_CTS		Pull-H	PC28
BTRFVDD	A11	BT5	I/O				PC27	69K		UART3_DCD		Pull-H	PC27
BTRFVDD	D11	BT6	O				PC26	69K		SPI2_SS3	UART3_DTR	L	PC26
BTRFVDD	B11	BT7	O				PC25	69K		UART3_DSR		L	PC25
BTRFVDD	C11	BT8	O		SSI2_RXFS		PC24	69K		UART3_RI		Hiz	PC24
BTRFVDD	G10	BT9	O		SSI2_RX		PC23	69K				L	PC23
BTRFVDD	F10	BT10	O		SSI2_TX		PC22	69K				H	PC22
BTRFVDD	B10	BT11	O		SSI2_TXCLK		PC21	69K				H	PC21
BTRFVDD	E10	BT12	O		SSI2_TXFS		PC20	69K				Hiz	PC20
BTRFVDD	D10	BT13	O		SSI2_RXCLK		PC19	69K				L	PC19
	C10	BTRFGND	Static										
NVDD3	A10	NVDD3	Static										
NVDD3	G9	SPI1_MOSI	I/O				PC17	69K				Pull-H	PC17
NVDD3	F9	SPI1_MISO	I/O				PC16	69K				Pull-H	PC16
NVDD3	E9	SPI1_$\overline{SS}$	I/O				PC15	69K				Pull-H	PC15
NVDD3	B9	SPI1_SCLK	I/O				PC14	69K				Pull-H	PC14
NVDD3	D9	SPI1_$\overline{SPI_RDY}$	I				PC13	69K			$\overline{DMA_Req}$	Pull-H	PC13
NVDD3	A9	UART1_RXD	I				PC12	69K				Pull-H	PC12

Table 3. MC9328MX1 Signal Multiplexing Scheme (Continued)

I/O Supply Voltage	BGA Pin	Primary			Alternate		GPIO					RESE State (At/After)	Default
		Signal	Dir	Pull-up	Signal	Dir	Mux	Pull-up	Ain	Bin	Aout		
NVDD3	C9	UART1_TXD	O				PC11	69K				Pull-H	PC11
NVDD3	A8	$\overline{\text{UART1_RTS}}$	I				PC10	69K				Pull-H	PC10
NVDD3	G8	$\overline{\text{UART1_CTS}}$	O				PC9	69K				Pull-H	PC9
NVDD3	B8	SSI_TXCLK	I/O				PC8	69K				Pull-H	PC8
NVDD3	F8	SSI_TXFS	I/O				PC7	69K				Pull-H	PC7
NVDD3	E8	SSI_TXDAT	O				PC6	69K				Pull-H	PC6
NVDD3	D8	SSI_RXDAT	I				PC5	69K				Pull-H	PC5
NVDD3	B7	SSI_RXCLK	I/O				PC4	69K				Pull-H	PC4
NVDD3	C8	SSI_RXFS	I/O				PC3	69K				Pull-H	PC3
	A7	VSS	Static										
NVDD4	C7	UART2_RXD	I				PB31	69K				Pull-H	PB31
NVDD4	F7	UART2_TXD	O				PB30	69K				Pull-H	PB30
NVDD4	E7	$\overline{\text{UART2_RTS}}$	I				PB29	69K				Pull-H	PB29
NVDD4	C6	$\overline{\text{UART2_CTS}}$	O				PB28	69K				Pull-H	PB28
NVDD4	D7	USBD_VMO	O				PB27	69K				Pull-H	PB27
NVDD4	D6	USBD_VPO	O				PB26	69K				Pull-H	PB26
NVDD4	E6	USBD_VM	I				PB25	69K				Pull-H	PB25
NVDD4	B6	USBD_VP	I				PB24	69K				Pull-H	PB24
NVDD4	D5	USBD_SUSPND	O				PB23	69K				Pull-H	PB23
NVDD4	C5	USBD_RCV	I/O				PB22	69K				Pull-H	PB22
NVDD4	B5	$\overline{\text{USBD_ROE}}$	O				PB21	69K				Pull-H	PB21
NVDD4	A5	USBD_AFE	O				PB20	69K				Pull-H	PB20
	A4	VSS	Static										
NVDD4	A6	NVDD4	Static										
NVDD4	G7	SIM_CLK	O		SSI_TXCLK	I/O	PB19	69K				Pull-H	PB19

Table 3. MC9328MX1 Signal Multiplexing Scheme (Continued)

I/O Supply Voltage	BGA Pin	Primary			Alternate		GPIO					RESE State (At/After)	Default
		Signal	Dir	Pull-up	Signal	Dir	Mux	Pull-up	Ain	Bin	Aout		
NVDD4	F6	SIM_RST	O		SSI_TXFS	I/O	PB18	69K				Pull-H	PB18
NVDD4	G6	SIM_RX	I		SSI_TXDAT	O	PB17	69K				Pull-H	PB17
NVDD4	B4	SIM_TX	I/O		SSI_RXDAT	I	PB16	69K				Pull-H	PB16
NVDD4	C4	SIM_PD	I		SSI_RXCLK	I/O	PB15	69K				Pull-H	PB15
NVDD4	D4	SIM_SVEN	O		SSI_RXFS	I/O	PB14	69K				Pull-H	PB14
NVDD4	B3	SD_CMD	I/O		MS_BS	O	PB13	69K				Pull-H	PB13
NVDD4	A3	SD_CLK	O		MS_SCLKO	O	PB12	69K				Pull-H	PB12
NVDD4	A2	SD_DAT3	I/O		MS_SDIO	I/O	PB11	69K (pull down)				Pull-L	PB11
NVDD4	E5	SD_DAT2	I/O		MS_SCLKI	I	PB10	69K				Pull-H	PB10
NVDD4	B2	SD_DAT1	I/O		MS_PI1	I	PB9	69K				Pull-H	PB9
NVDD4	C3	SD_DAT0	I/O		MS_PI0	I	PB8	69K				Pull-H	PB8

1 After reset, $\overline{CS0}$ goes H/L depends on BOOT[3:0].

2 Need external circuitry to drive the signal.

3 Need external pull-up.

4 External resistor is needed.

5 Need external pull-up or pull-down.

6 ASP signals are clamped by AVDD2 to prevent ESD (electrostatic discharge) damage. AVDD2 must be greater than QVDD to keep diodes reverse-biased.

3 Electrical Characteristics

This section contains the electrical specifications and timing diagrams for the i.MX1 processor.

3.1 Maximum Ratings

Table 4 provides information on maximum ratings which are those values beyond which damage to the device may occur. Functional operation should be restricted to the limits listed in Recommended Operating Range Table 5 on page 23 or the DC Characteristics table.

Table 4. Maximum Ratings

Symbol	Rating	Minimum	Maximum	Unit
NV_{DD}	DC I/O Supply Voltage	-0.3	3.3	V
QV_{DD}	DC Internal (core = 150 MHz) Supply Voltage	-0.3	1.9	V
QV_{DD}	DC Internal (core = 200 MHz) Supply Voltage	-0.3	2.0	V
AV_{DD}	DC Analog Supply Voltage	-0.3	3.3	V
$BTRFV_{DD}$	DC Bluetooth Supply Voltage	-0.3	3.3	V
VESD_HBM	ESD immunity with HBM (human body model)	–	2000	V
VESD_MM	ESD immunity with MM (machine model)	–	100	V
ILatchup	Latch-up immunity	–	200	mA
Test	Storage temperature	-55	150	°C
Pmax	Power Consumption	800[1]	1300[2]	mW

1 A typical application with 30 pads simultaneously switching assumes the GPIO toggling and instruction fetches from the ARM® core-that is, 7x GPIO, 15x Data bus, and 8x Address bus.

2 A worst-case application with 70 pads simultaneously switching assumes the GPIO toggling and instruction fetches from the ARM core-that is, 32x GPIO, 30x Data bus, 8x Address bus. These calculations are based on the core running its heaviest OS application at MHz, and where the whole image is running out of SDRAM. QVDD at V, NVDD and AVDD at 3.3V, therefore, 180mA is the worst measurement recorded in the factory environment, max 5mA is consumed for OSC pads, with each toggle GPIO consuming 4mA.

3.2 Recommended Operating Range

Table 5 provides the recommended operating ranges for the supply voltages and temperatures. The i.MX1 processor has multiple pairs of VDD and VSS power supply and return pins. QVDD and QVSS pins are used for internal logic. All other VDD and VSS pins are for the I/O pads voltage supply, and each pair of VDD and VSS provides power to the enclosed I/O pads. This design allows different peripheral supply voltage levels in a system.

Because AVDD pins are supply voltages to the analog pads, it is recommended to isolate and noise-filter the AVDD pins from other VDD pins.

BTRFVDD is the supply voltage for the Bluetooth interface signals. It is quite sensitive to the data transmit/receive accuracy. Please refer to Bluetooth RF spec for special handling. If Bluetooth is not used

in the system, these Bluetooth pins can be used as general purpose I/O pins and BTRFVDD can be used as other NVDD pins.

For more information about I/O pads grouping per VDD, please refer to Table 2 on page 4.

Table 5. Recommended Operating Range

Symbol	Rating	Minimum	Maximum	Unit
T_A	Operating temperature range MC9328MX1VM20\MC9328MX1VM15	0	70	°C
T_A	Operating temperature range MC9328MX1DVM20\MC9328MX1DVM15	-30	70	°C
T_A	Operating temperature range MC9328MX1CVM15	-40	85	°C
NVDD	I/O supply voltage (if using MSHC, CSI, SPI, BTA, LCD, and USBd which are only 3 V interfaces)	2.70	3.30	V
NVDD	I/O supply voltage (if not using the peripherals listed above)	1.70	3.30	V
QVDD	Internal supply voltage (Core = 150 MHz)	1.70	1.90	V
QVDD	Internal supply voltage (Core = 200 MHz)	1.80	2.00	V
AVDD	Analog supply voltage	1.70	3.30	V

3.3 Power Sequence Requirements

For required power-up and power-down sequencing, please refer to the “Power-Up Sequence” section of application note AN2537 on the i.MX applications processor website.

3.4 DC Electrical Characteristics

Table 6 contains both maximum and minimum DC characteristics of the i.MX1 processor.

Table 6. Maximum and Minimum DC Characteristics

Number or Symbol	Parameter	Min	Typical	Max	Unit
Iop	Full running operating current at 1.8V for QVDD, 3.3V for NVDD/AVDD (Core = 96 MHz, System = 96 MHz, MPEG4 decoding playback from external memory card to both external SSI audio decoder and driving TFT display panel, and OS with MMU enabled memory system is running on external SDRAM).	–	QVDD at 1.8V = 120mA; NVDD+AVDD at 3.0V = 30mA	–	mA
$Sidd_1$	Standby current (Core = 150 MHz, QVDD = 1.8V, temp = 25°C)	–	25	–	µA
$Sidd_2$	Standby current (Core = 150 MHz, QVDD = 1.8V, temp = 55°C)	–	45	–	µA
$Sidd_3$	Standby current (Core = 150 MHz, QVDD = 2.0V, temp = 25°C)	–	35	–	µA

Table 6. Maximum and Minimum DC Characteristics (Continued)

Number or Symbol	Parameter	Min	Typical	Max	Unit
$Sidd_4$	Standby current (Core = 150 MHz, QVDD = 2.0V, temp = 55°C)	–	60	–	µA
V_{IH}	Input high voltage	$0.7V_{DD}$	–	Vdd+0.2	V
V_{IL}	Input low voltage	–	–	0.4	V
V_{OH}	Output high voltage (I_{OH} = 2.0 mA)	$0.7V_{DD}$	–	Vdd	V
V_{OL}	Output low voltage (I_{OL} = -2.5 mA)	–	–	0.4	V
I_{IL}	Input low leakage current (V_{IN} = GND, no pull-up or pull-down)	–	–	±1	µA
I_{IH}	Input high leakage current (V_{IN} = V_{DD}, no pull-up or pull-down)	–	–	±1	µA
I_{OH}	Output high current (V_{OH} = $0.8V_{DD}$, V_{DD} = 1.8V)	4.0	–	–	mA
I_{OL}	Output low current (V_{OL} = 0.4V, V_{DD} = 1.8V)	-4.0	–	–	mA
I_{OZ}	Output leakage current (V_{out} = V_{DD}, output is high impedance)	–	–	±5	µA
C_i	Input capacitance	–	–	5	pF
C_o	Output capacitance	–	–	5	pF

3.5 AC Electrical Characteristics

The AC characteristics consist of output delays, input setup and hold times, and signal skew times. All signals are specified relative to an appropriate edge of other signals. All timing specifications are specified at a system operating frequency from 0 MHz to 96 MHz (core operating frequency 150 MHz) with an operating supply voltage from $V_{DD\ min}$ to $V_{DD\ max}$ under an operating temperature from T_L to T_H. All timing is measured at 30 pF loading.

Table 7. Tristate Signal Timing

Pin	Parameter	Minimum	Maximum	Unit
TRISTATE	Time from TRISTATE activate until I/O becomes Hi-Z	–	20.8	ns

Table 8. 32k/16M Oscillator Signal Timing

Parameter	Minimum	RMS	Maximum	Unit
EXTAL32k input jitter (peak to peak)	–	5	20	ns
EXTAL32k startup time	800	–	–	ms

Table 8. 32k/16M Oscillator Signal Timing (Continued)

Parameter	Minimum	RMS	Maximum	Unit
EXTAL16M input jitter (peak to peak) [1]	–	TBD	TBD	–
EXTAL16M startup time [1]	TBD	–	–	–

[1] The 16 MHz oscillator is not recommended for use in new designs.

4 Functional Description and Application Information

This section provides the electrical information including and timing diagrams for the individual modules of the i.MX1.

4.1 Embedded Trace Macrocell

All registers in the ETM9 are programmed through a JTAG interface. The interface is an extension of the ARM920T processor's TAP controller, and is assigned scan chain 6. The scan chain consists of a 40-bit shift register comprised of the following:

- 32-bit data field
- 7-bit address field
- A read/write bit

The data to be written is scanned into the 32-bit data field, the address of the register into the 7-bit address field, and a 1 into the read/write bit.

A register is read by scanning its address into the address field and a 0 into the read/write bit. The 32-bit data field is ignored. A read or a write takes place when the TAP controller enters the UPDATE-DR state. The timing diagram for the ETM9 is shown in Figure 2. See Table 9 for the ETM9 timing parameters used in Figure 2.

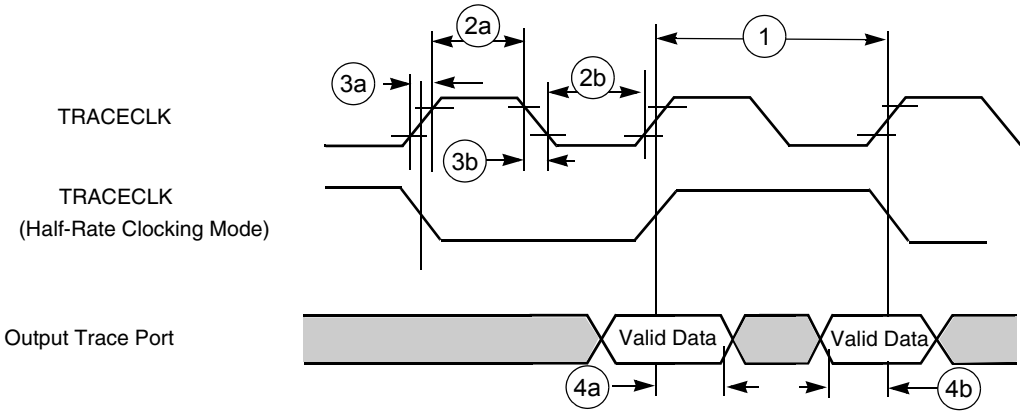

Figure 2. Trace Port Timing Diagram

Table 9. Trace Port Timing Diagram Parameter Table

Ref No.	Parameter	1.8 ± 0.1 V		3.0 ± 0.3 V		Unit
		Minimum	Maximum	Minimum	Maximum	
1	CLK frequency	0	85	0	100	MHz
2a	Clock high time	1.3	–	2	–	ns
2b	Clock low time	3	–	2	–	ns
3a	Clock rise time	–	4	–	3	ns
3b	Clock fall time	–	3	–	3	ns
4a	Output hold time	2.28	–	2	–	ns
4b	Output setup time	3.42	–	3	–	ns

4.2 DPLL Timing Specifications

Parameters of the DPLL are given in Table 10. In this table, T_{ref} is a reference clock period after the pre-divider and T_{dck} is the output double clock period.

Table 10. DPLL Specifications

Parameter	Test Conditions	Minimum	Typical	Maximum	Unit
DPLL input clock freq range	Vcc = 1.8V	5	–	100	MHz
Pre-divider output clock freq range	Vcc = 1.8V	5	–	30	MHz
DPLL output clock freq range	Vcc = 1.8V	80	–	220	MHz
Pre-divider factor (PD)	–	1	–	16	–
Total multiplication factor (MF)	Includes both integer and fractional parts	5	–	15	–
MF integer part	–	5	–	15	–
MF numerator	Should be less than the denominator	0	–	1022	–
MF denominator	–	1	–	1023	–
Pre-multiplier lock-in time	–	–	–	312.5	µsec
Freq lock-in time after full reset	FOL mode for non-integer MF (does not include pre-multi lock-in time)	250	280 (56 µs)	300	T_{ref}
Freq lock-in time after partial reset	FOL mode for non-integer MF (does not include pre-multi lock-in time)	220	250 (50 µs)	270	T_{ref}
Phase lock-in time after full reset	FPL mode and integer MF (does not include pre-multi lock-in time)	300	350 (70 µs)	400	T_{ref}
Phase lock-in time after partial reset	FPL mode and integer MF (does not include pre-multi lock-in time)	270	320 (64 µs)	370	T_{ref}
Freq jitter (p-p)	–	–	0.005 (0.01%)	0.01	$2 \bullet T_{dck}$

Table 10. DPLL Specifications (Continued)

Parameter	Test Conditions	Minimum	Typical	Maximum	Unit
Phase jitter (p-p)	Integer MF, FPL mode, Vcc=1.8V	–	1.0 (10%)	1.5	ns
Power supply voltage	–	1.7	–	2.5	V
Power dissipation	FOL mode, integer MF, f_{dck} = MHz, Vcc = 1.8V	–	–	4	mW

4.3 Reset Module

The timing relationships of the Reset module with the POR and RESET_IN are shown in Figure 3 and Figure 4.

NOTE

Be aware that NVDD must ramp up to at least 1.8V before QVDD is powered up to prevent forward biasing.

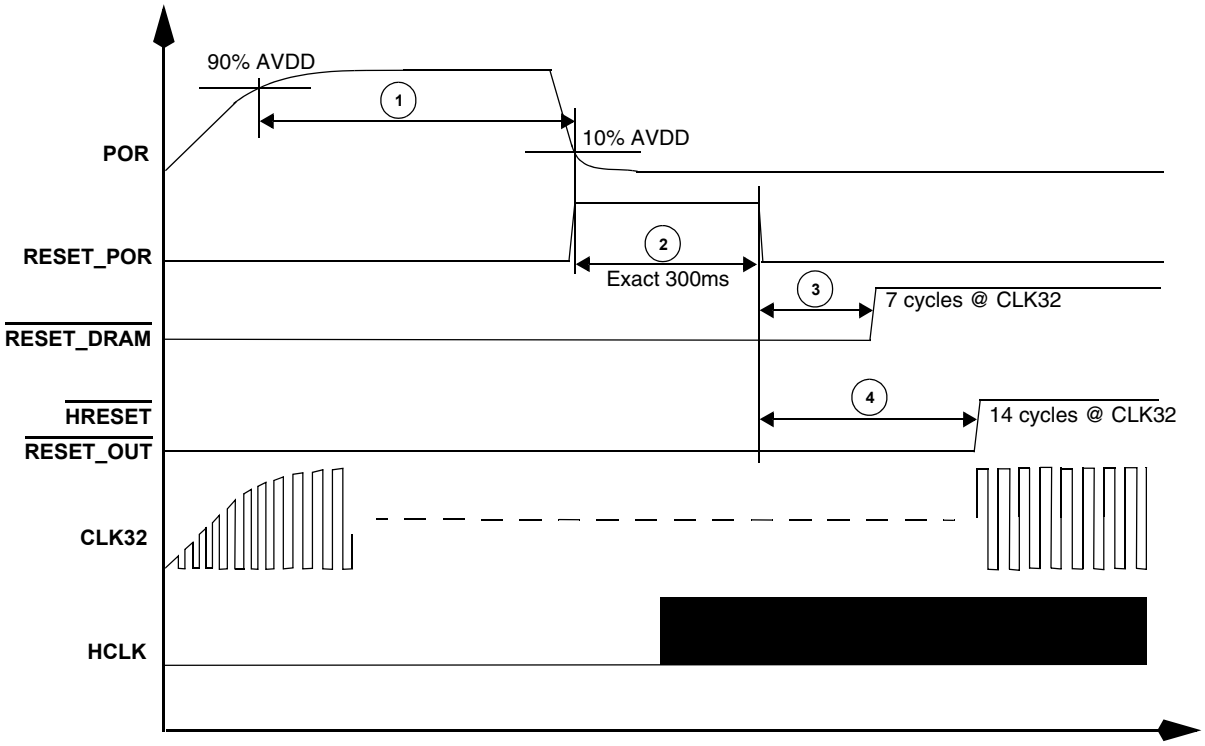

Figure 3. Timing Relationship with POR

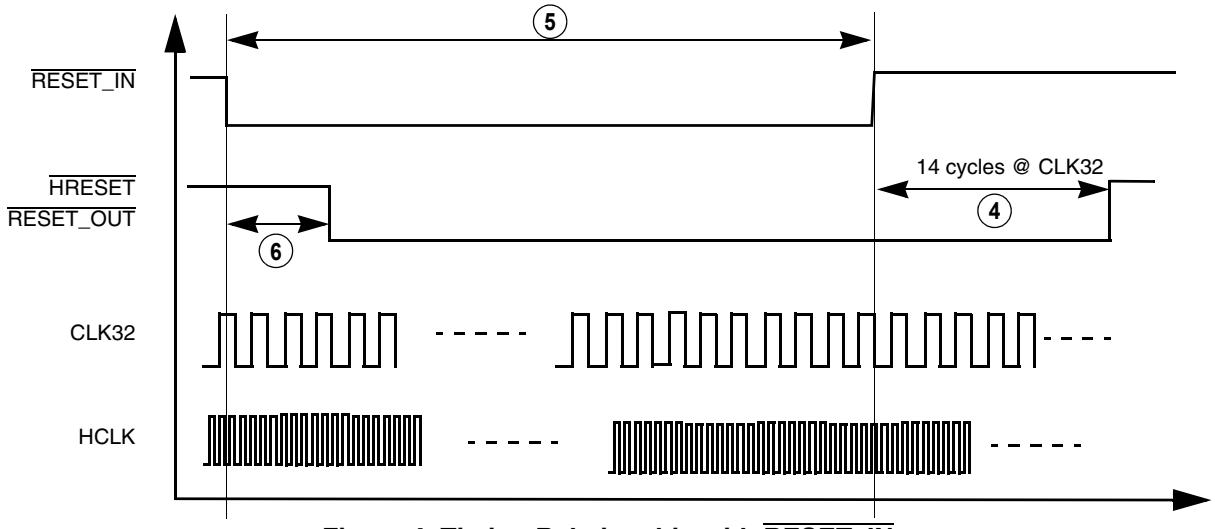

Figure 4. Timing Relationship with RESET_IN

Table 11. Reset Module Timing Parameter Table

Ref No.	Parameter	1.8 ± 0.1 V		3.0 ± 0.3 V		Unit
		Min	Max	Min	Max	
1	Width of input POWER_ON_RESET	note[1]	–	note[1]	–	–
2	Width of internal POWER_ON_RESET (9600 *CLK32 at 32 kHz)	300	300	300	300	ms
3	7K to 32K-cycle stretcher for SDRAM reset	7	7	7	7	Cycles of CLK32
4	14K to 32K-cycle stretcher for internal system reset HRESERT and output reset at pin RESET_OUT	14	14	14	14	Cycles of CLK32
5	Width of external hard-reset RESET_IN	4	–	4	–	Cycles of CLK32
6	4K to 32K-cycle qualifier	4	4	4	4	Cycles of CLK32

[1] POR width is dependent on the 32 or 32.768 kHz crystal oscillator start-up time. Design margin should allow for crystal tolerance, i.MX chip variations, temperature impact, and supply voltage influence. Through the process of supplying crystals for use with CMOS oscillators, crystal manufacturers have developed a working knowledge of start-up time of their crystals. Typically, start-up times range from 400 ms to 1.2 seconds for this type of crystal.
If an external stable clock source (already running) is used instead of a crystal, the width of POR should be ignored in calculating timing for the start-up process.

4.4 External Interface Module

The External Interface Module (EIM) handles the interface to devices external to the i.MX1 processor, including the generation of chip-selects for external peripherals and memory. The timing diagram for the EIM is shown in Figure 5, and Table 12 defines the parameters of signals.

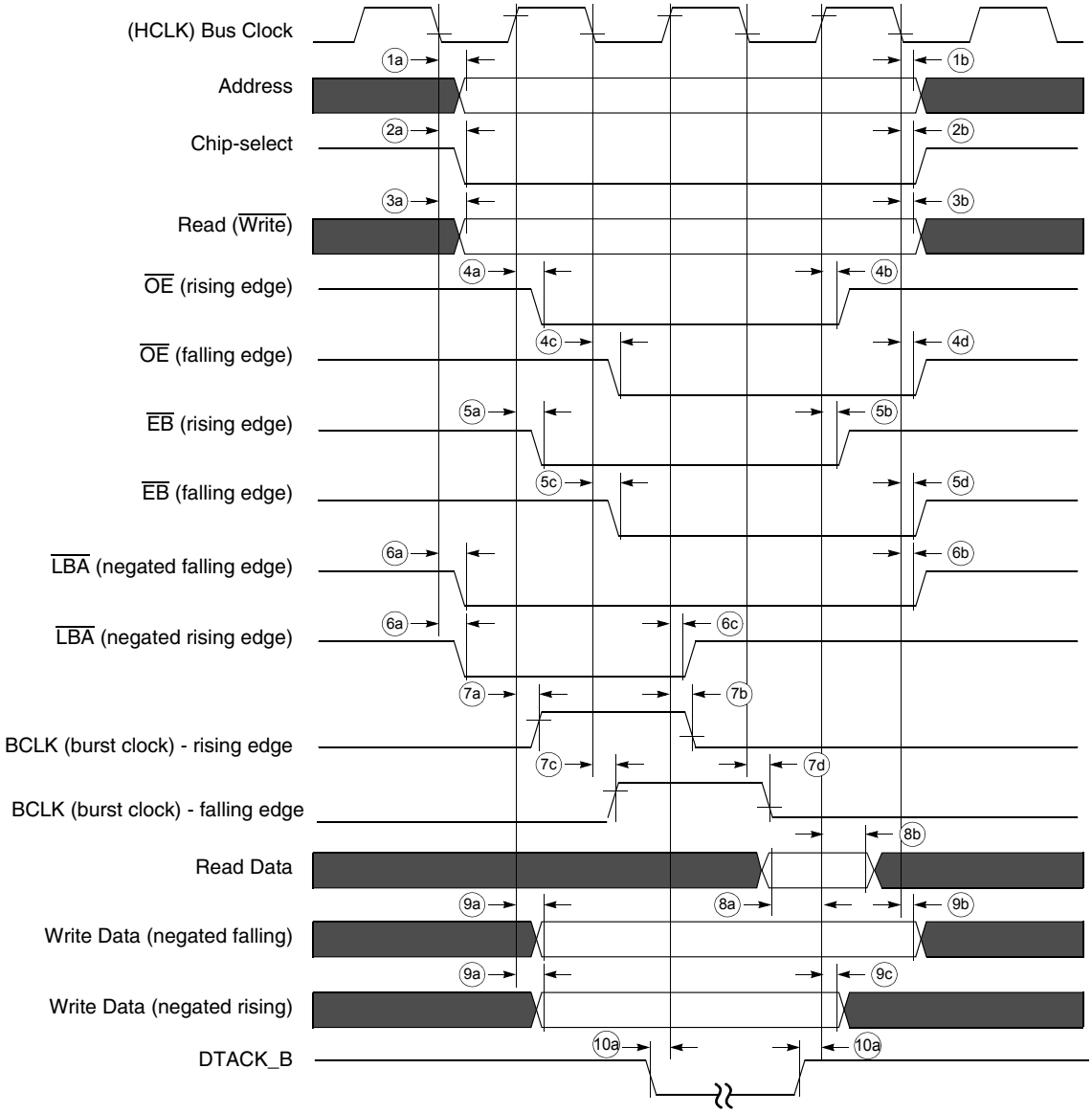

Figure 5. EIM Bus Timing Diagram

Table 12. EIM Bus Timing Parameter Table

Ref No.	Parameter	1.8 ± 0.1 V			3.0 ± 0.3 V			Unit
		Min	Typical	Max	Min	Typical	Max	
1a	Clock fall to address valid	2.48	3.31	9.11	2.4	3.2	8.8	ns
1b	Clock fall to address invalid	1.55	2.48	5.69	1.5	2.4	5.5	ns
2a	Clock fall to chip-select valid	2.69	3.31	7.87	2.6	3.2	7.6	ns
2b	Clock fall to chip-select invalid	1.55	2.48	6.31	1.5	2.4	6.1	ns
3a	Clock fall to Read (Write) Valid	1.35	2.79	6.52	1.3	2.7	6.3	ns
3b	Clock fall to Read (Write) Invalid	1.86	2.59	6.11	1.8	2.5	5.9	ns

Table 12. EIM Bus Timing Parameter Table (Continued)

Ref No.	Parameter	1.8 ± 0.1 V			3.0 ± 0.3 V			Unit
		Min	Typical	Max	Min	Typical	Max	
4a	Clock[1] rise to Output Enable Valid	2.32	2.62	6.85	2.3	2.6	6.8	ns
4b	Clock[1] rise to Output Enable Invalid	2.11	2.52	6.55	2.1	2.5	6.5	ns
4c	Clock[1] fall to Output Enable Valid	2.38	2.69	7.04	2.3	2.6	6.8	ns
4d	Clock[1] fall to Output Enable Invalid	2.17	2.59	6.73	2.1	2.5	6.5	ns
5a	Clock[1] rise to Enable Bytes Valid	1.91	2.52	5.54	1.9	2.5	5.5	ns
5b	Clock[1] rise to Enable Bytes Invalid	1.81	2.42	5.24	1.8	2.4	5.2	ns
5c	Clock[1] fall to Enable Bytes Valid	1.97	2.59	5.69	1.9	2.5	5.5	ns
5d	Clock[1] fall to Enable Bytes Invalid	1.76	2.48	5.38	1.7	2.4	5.2	ns
6a	Clock[1] fall to Load Burst Address Valid	2.07	2.79	6.73	2.0	2.7	6.5	ns
6b	Clock[1] fall to Load Burst Address Invalid	1.97	2.79	6.83	1.9	2.7	6.6	ns
6c	Clock[1] rise to Load Burst Address Invalid	1.91	2.62	6.45	1.9	2.6	6.4	ns
7a	Clock[1] rise to Burst Clock rise	1.61	2.62	5.64	1.6	2.6	5.6	ns
7b	Clock[1]rise to Burst Clock fall	1.61	2.62	5.84	1.6	2.6	5.8	ns
7c	Clock[1] fall to Burst Clock rise	1.55	2.48	5.59	1.5	2.4	5.4	ns
7d	Clock[1] fall to Burst Clock fall	1.55	2.59	5.80	1.5	2.5	5.6	ns
8a	Read Data setup time	5.54	–	–	5.5	–	–	ns
8b	Read Data hold time	0	–	–	0	–	–	ns
9a	Clock[1] rise to Write Data Valid	1.81	2.72	6.85	1.8	2.7	6.8	ns
9b	Clock[1] fall to Write Data Invalid	1.45	2.48	5.69	1.4	2.4	5.5	ns
9c	Clock[1] rise to Write Data Invalid	1.63	–	–	1.62	–	–	ns
10a	$\overline{\text{DTACK}}$ setup time	2.52	–	–	2.5	–	–	ns

[1] Clock refers to the system clock signal, HCLK, generated from the System DPLL

4.4.1 $\overline{\text{DTACK}}$ Signal Description

The $\overline{\text{DTACK}}$ signal is the external input data acknowledge signal. When using the external $\overline{\text{DTACK}}$ signal as a data acknowledge signal, the bus time-out monitor generates a bus error when a bus cycle is not terminated by the external $\overline{\text{DTACK}}$ signal after 1022 HCLK counts have elapsed. Only the CS5 group supports DTACK signal function when the external DTACK signal is used for data acknowledgement.

4.4.2 $\overline{\text{DTACK}}$ Signal Timing

Figure 6 through Figure 9 show the access cycle timing used by chip-select 5. The signal values and units of measure for this figure are found in the associated tables.

4.4.2.1 WAIT Read Cycle without DMA

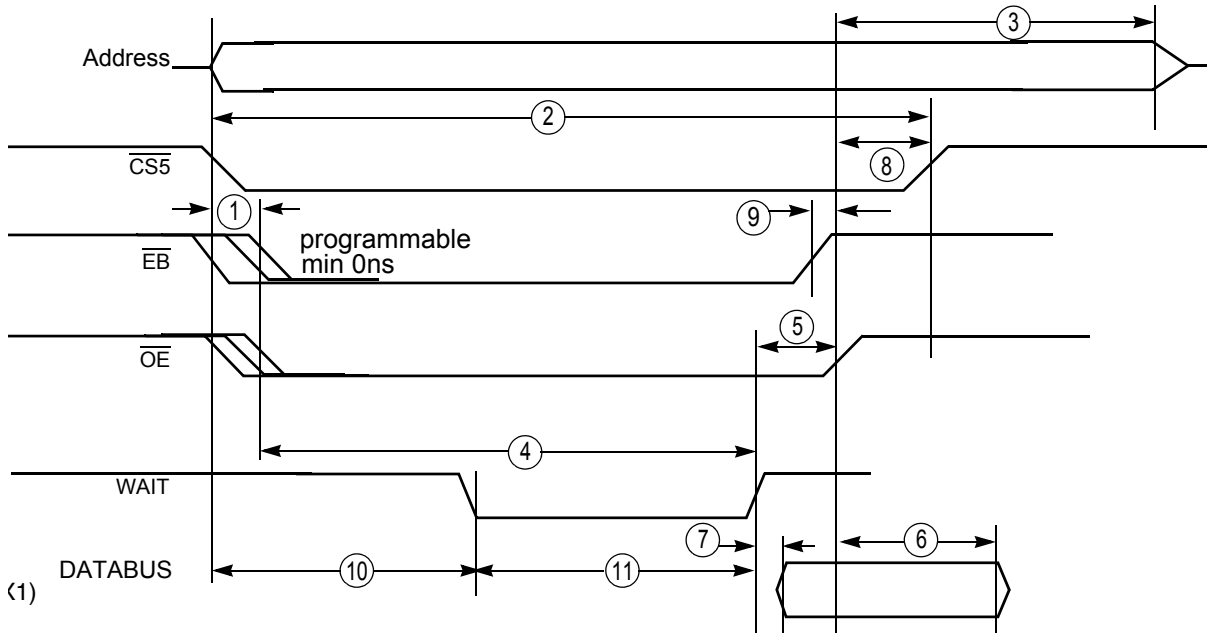

Figure 6. WAIT Read Cycle without DMA

Table 13. WAIT Read Cycle without DMA: WSC = 111111, DTACK_SEL=1, HCLK=96MHz

Number	Characteristic	3.0 ± 0.3 V		Unit
		Minimum	Maximum	
1	$\overline{OE}$ and $\overline{EB}$ assertion time	See note 2	–	ns
2	$\overline{CS5}$ pulse width	3T	–	ns
3	$\overline{OE}$ negated to address inactive	56.81	–	ns
4	Wait asserted after $\overline{OE}$ asserted	–	1020T	ns
5	Wait asserted to $\overline{OE}$ negated	2T+2.2	3T+7.17	ns
6	Data hold timing after $\overline{OE}$ negated	T-1.86	–	ns
7	Data ready after wait asserted	0	T	ns
8	OE negated to CS negated	1.5T+0.24	1.5T+0.85	ns
9	OE negated after EB negated	0.5	1.5	ns
10	Become low after CS5 asserted	0	1019T	ns
11	Wait pulse width	1T	1020T	ns

Note:
1. T is the system clock period. (For 96 MHz system clock, T=10.42 ns)
2. $\overline{OE}$ and $\overline{EB}$ assertion time is programmable by OEA bit in CS5L register. $\overline{EB}$ assertion in read cycle will occur only when EBC bit in CS5L register is clear.
3. Address becomes valid and $\overline{CS}$ asserts at the start of read access cycle.
4. The external wait input requirement is eliminated when $\overline{CS5}$ is programmed to use internal wait state.

4.4.2.2 WAIT Read Cycle DMA Enabled

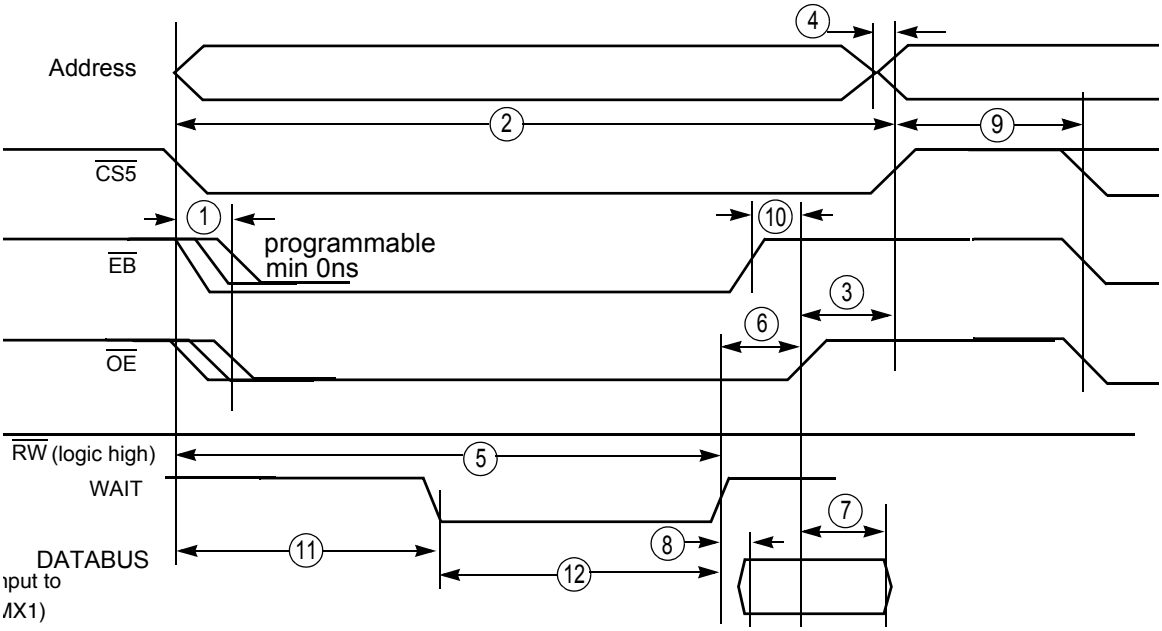

Figure 7. DTACK WAIT Read Cycle DMA Enabled

Table 14. DTACK WAIT Read Cycle DMA Enabled: WSC = 111111, DTACK_SEL=1, HCLK=96MHz

Number	Characteristic	3.0 ± 0.3 V		Unit
		Minimum	Maximum	
1	$\overline{OE}$ and $\overline{EB}$ assertion time	See note 2	–	ns
2	$\overline{CS}$ pulse width	3T	–	ns
3	$\overline{OE}$ negated before $\overline{CS5}$ is negated	1.5T+0.24	1.5T+0.85	ns
4	Address inactived before $\overline{CS}$ negated	–	0.93	ns
5	Wait asserted after $\overline{CS5}$ asserted	–	1020T	ns
6	Wait asserted to $\overline{OE}$ negated	2T+2.2	3T+7.17	ns
7	Data hold timing after $\overline{OE}$ negated	T-1.86	–	ns
8	Data ready after wait is asserted	–	T	ns
9	$\overline{CS}$ deactive to next $\overline{CS}$ active	T	–	ns
10	OE negate after EB negate	0.5	1.5	ns
11	Wait becomes low after CS5 asserted	0	1019T	ns

Table 14. DTACK WAIT Read Cycle DMA Enabled: WSC = 111111, DTACK_SEL=1, HCLK=96MHz (Continued)

Number	Characteristic	3.0 ± 0.3 V		Unit
		Minimum	Maximum	
12	Wait pulse width	1T	1020T	ns

Note:
1. T is the system clock period. (For 96 MHz system clock, T=10.42 ns)
2. $\overline{OE}$ and $\overline{EB}$ assertion time is programmable by OEA bit in CS5L register. $\overline{EB}$ assertion in read cycle will occur only when EBC bit in CS5L register is clear.
3. Address becomes valid and $\overline{CS}$ asserts at the start of read access cycle.
4. The external wait input requirement is eliminated when $\overline{CS5}$ is programmed to use internal wait state.

4.4.2.3 WAIT Write Cycle without DMA

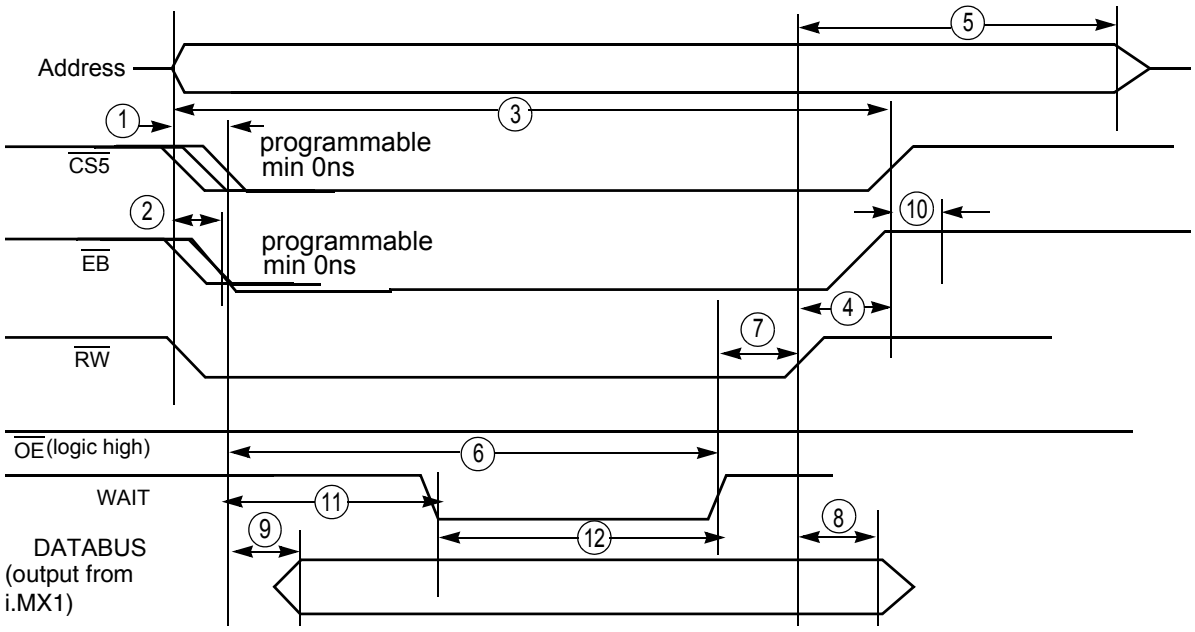

Figure 8. WAIT Write Cycle without DMA

Table 15. WAIT Write Cycle without DMA: WSC = 111111, DTACK_SEL=1, HCLK=96MHz

Number	Characteristic	3.0 ± 0.3 V		Unit
		Minimum	Maximum	
1	$\overline{CS5}$ assertion time	See note 2	–	ns
2	$\overline{EB}$ assertion time	See note 2	–	ns
3	$\overline{CS5}$ pulse width	3T	–	ns
4	$\overline{RW}$ negated before $\overline{CS5}$ is negated	2.5T-0.29	2.5T+0.68	ns
5	$\overline{RW}$ negated to Address inactive	67.28	–	ns
6	Wait asserted after $\overline{CS5}$ asserted	–	1020T	ns

Table 15. WAIT Write Cycle without DMA: WSC = 111111, DTACK_SEL=1, HCLK=96MHz (Continued)

Number	Characteristic	3.0 ± 0.3 V		Unit
		Minimum	Maximum	
7	Wait asserted to $\overline{RW}$ negated	1T+2.15	2T+7.34	ns
8	Data hold timing after $\overline{RW}$ negated	2.5T-1.18	–	ns
9	Data ready after $\overline{CS5}$ is asserted	–	T	ns
10	$\overline{EB}$ negated after $\overline{CS5}$ is negated	1.5T+0.74	1.5T+2.35	ns
11	Wait becomes low after $\overline{CS5}$ asserted	0	1019T	ns
12	Wait pulse width	1T	1020T	ns

Note:
1. T is the system clock period. (For 96 MHz system clock, T=10.42 ns)
2. $\overline{CS5}$ assertion can be controlled by CSA bits. $\overline{EB}$ assertion can also be programmable by WEA bits in CS5L register.
3. Address becomes valid and $\overline{RW}$ asserts at the start of write access cycle.
4. The external wait input requirement is eliminated when $\overline{CS5}$ is programmed to use internal wait state.

4.4.2.4 WAIT Write Cycle DMA Enabled

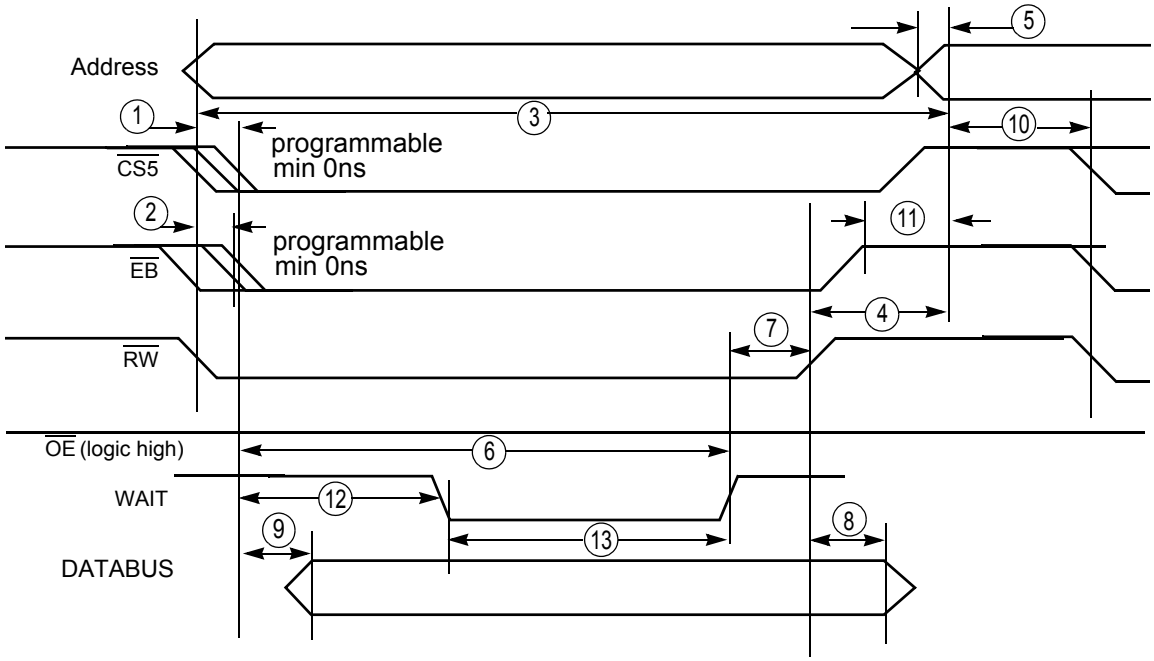

Figure 9. WAIT Write Cycle DMA Enabled

Table 16. WAIT Write Cycle DMA Enabled: WSC = 111111, DTACK_SEL=1, HCLK=96MHz

Number	Characteristic	3.0 ± 0.3 V		Unit
		Minimum	Maximum	
1	$\overline{CS5}$ assertion time	See note 2	–	ns
2	$\overline{EB}$ assertion time	See note 2	–	ns
3	$\overline{CS5}$ pulse width	3T	–	ns
4	$\overline{RW}$ negated before $\overline{CS5}$ is negated	2.5T-0.29	2.5T+0.68	ns
5	Address inactived after $\overline{CS}$ negated	–	0.93	ns
6	Wait asserted after $\overline{CS5}$ asserted	–	1020T	ns
7	Wait asserted to $\overline{RW}$ negated	T+2.15	2T+7.34	ns
8	Data hold timing after $\overline{RW}$ negated	24.87	–	ns
9	Data ready after $\overline{CS5}$ is asserted	–	T	ns
10	$\overline{CS}$ deactive to next $\overline{CS}$ active	T	–	ns
11	$\overline{EB}$ negate after $\overline{CS}$ negate	1.5T+0.74	1.5T+2.35	
12	Wait becomes low after $\overline{CS5}$ asserted	0	1019T	ns
13	Wait pulse width	1T	1020T	ns

Note:
1. T is the system clock period. (For 96 MHz system clock, T=10.42 ns)
2. $\overline{CS5}$ assertion can be controlled by CSA bits. $\overline{EB}$ assertion also can be programmable by WEA bits in CS5L register.
3. Address becomes valid and $\overline{RW}$ asserts at the start of write access cycle.
4.The external wait input requirement is eliminated when $\overline{CS5}$ is programmed to use internal wait state.

4.4.3 EIM External Bus Timing

The External Interface Module (EIM) is the interface to devices external to the i.MX1, including generation of chip-selects for external peripherals and memory. The timing diagram for the EIM is shown in Figure 5, and Table 12 defines the parameters of signals.

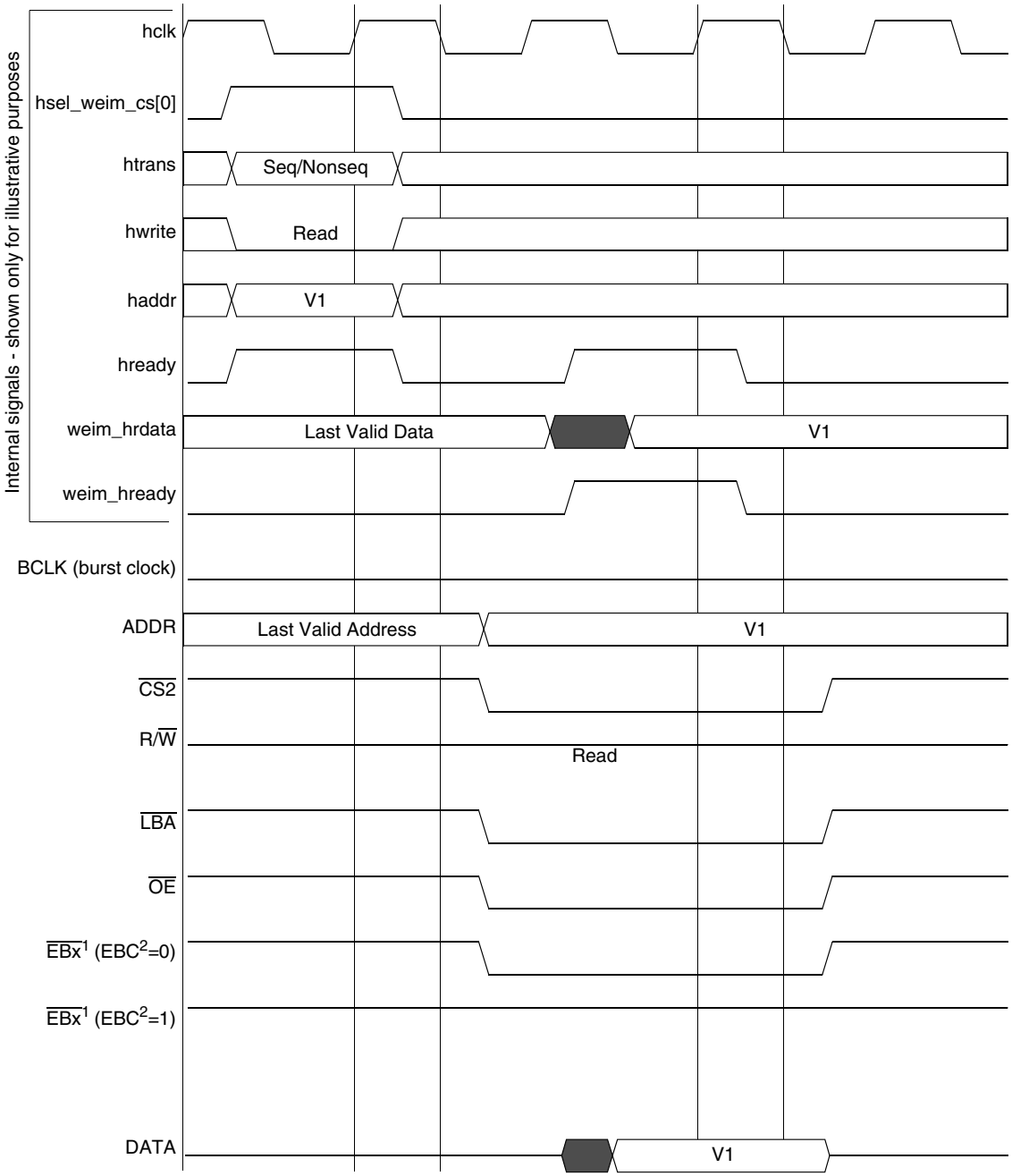

Note 1: x = 0, 1, 2 or 3
Note 2: EBC = Enable Byte Control bit (bit 11) on the Chip Select Control Register

Figure 10. WSC = 1, A.HALF/E.HALF

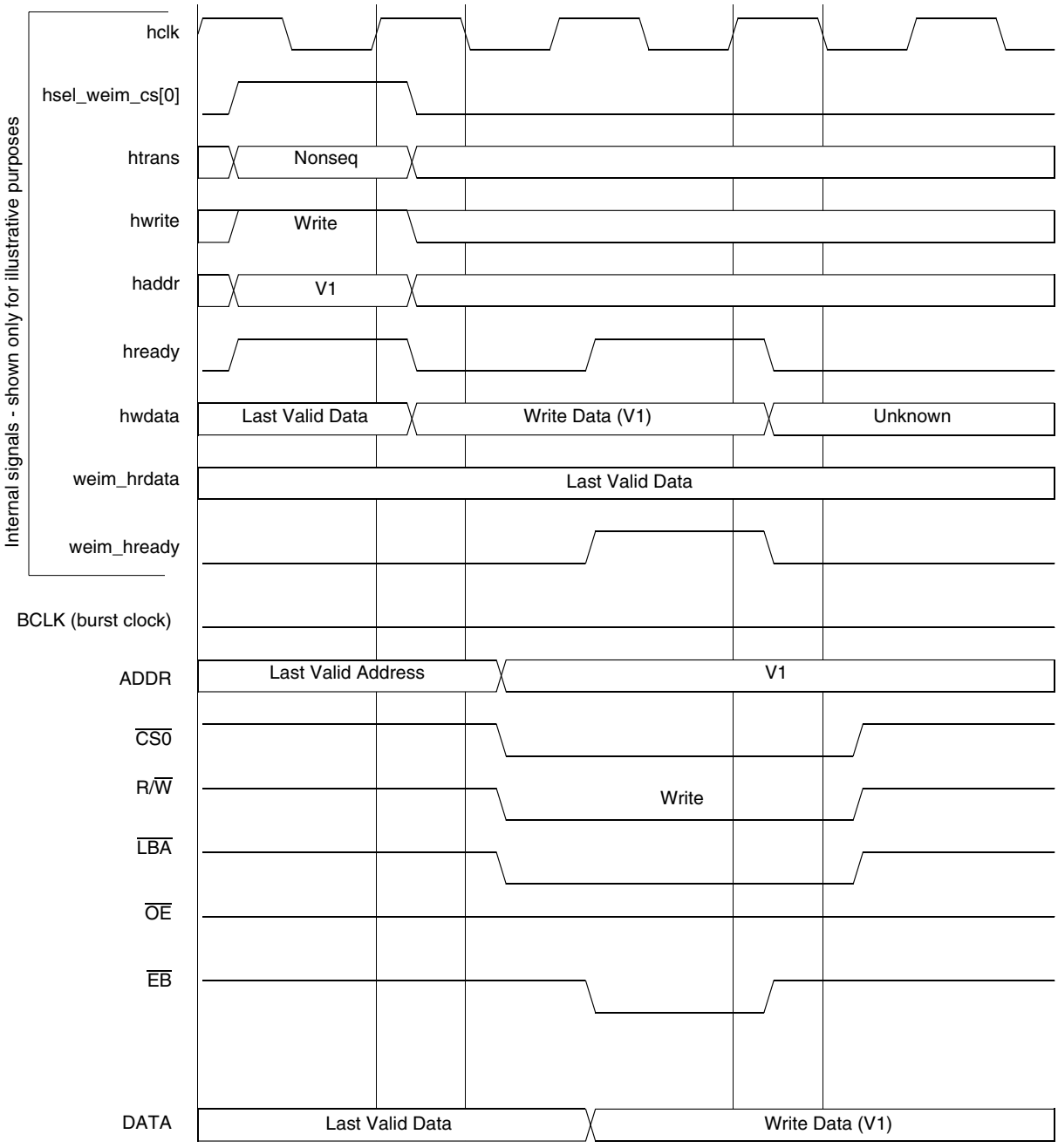

Figure 11. WSC = 1, WEA = 1, WEN = 1, A.HALF/E.HALF

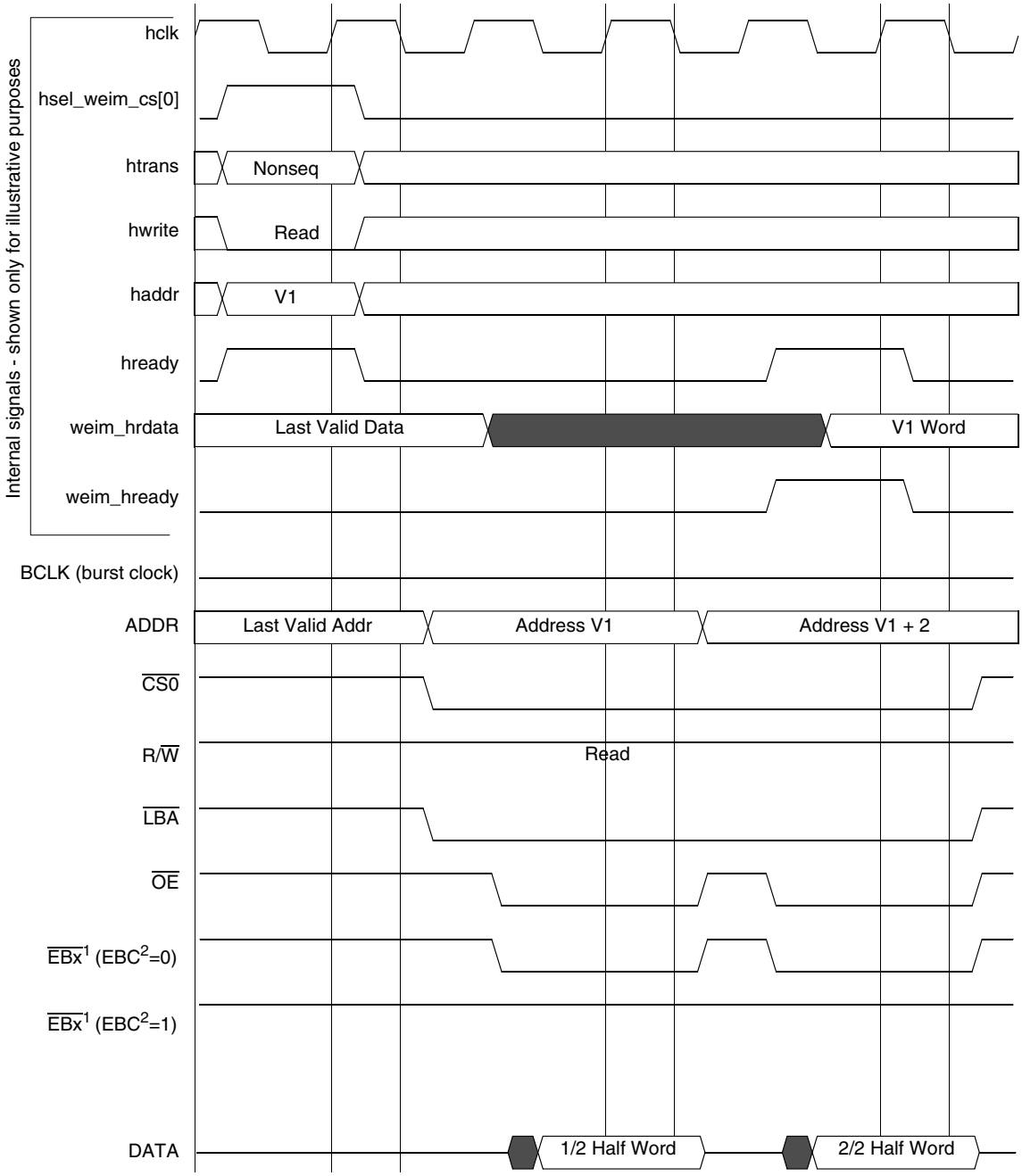

Note 1: x = 0, 1, 2 or 3
Note 2: EBC = Enable Byte Control bit (bit 11) on the Chip Select Control Register

Figure 12. WSC = 1, OEA = 1, A.WORD/E.HALF

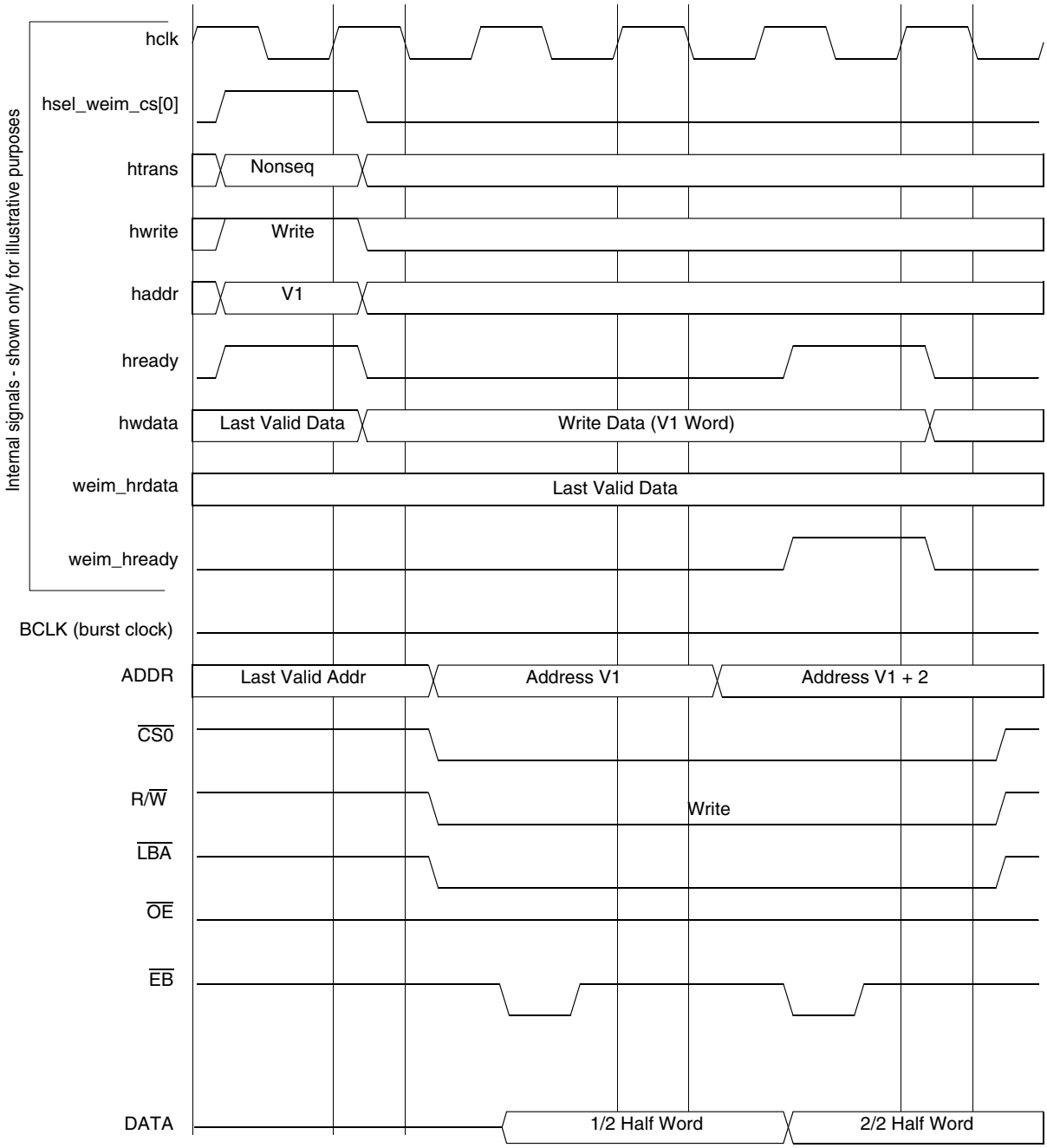

Figure 13. WSC = 1, WEA = 1, WEN = 2, A.WORD/E.HALF

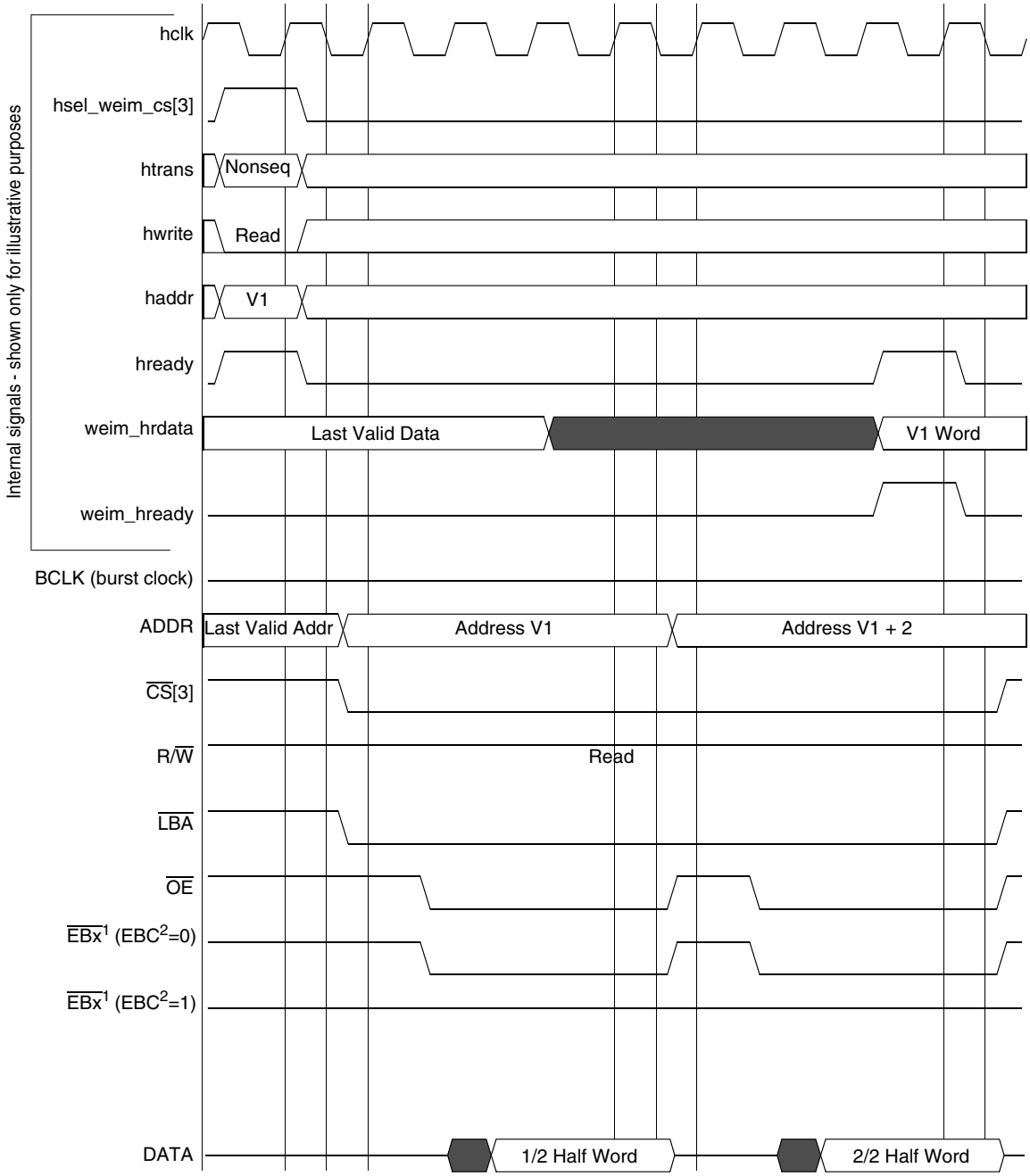

Note 1: x = 0, 1, 2 or 3
Note 2: EBC = Enable Byte Control bit (bit 11) on the Chip Select Control Register

Figure 14. WSC = 3, OEA = 2, A.WORD/E.HALF

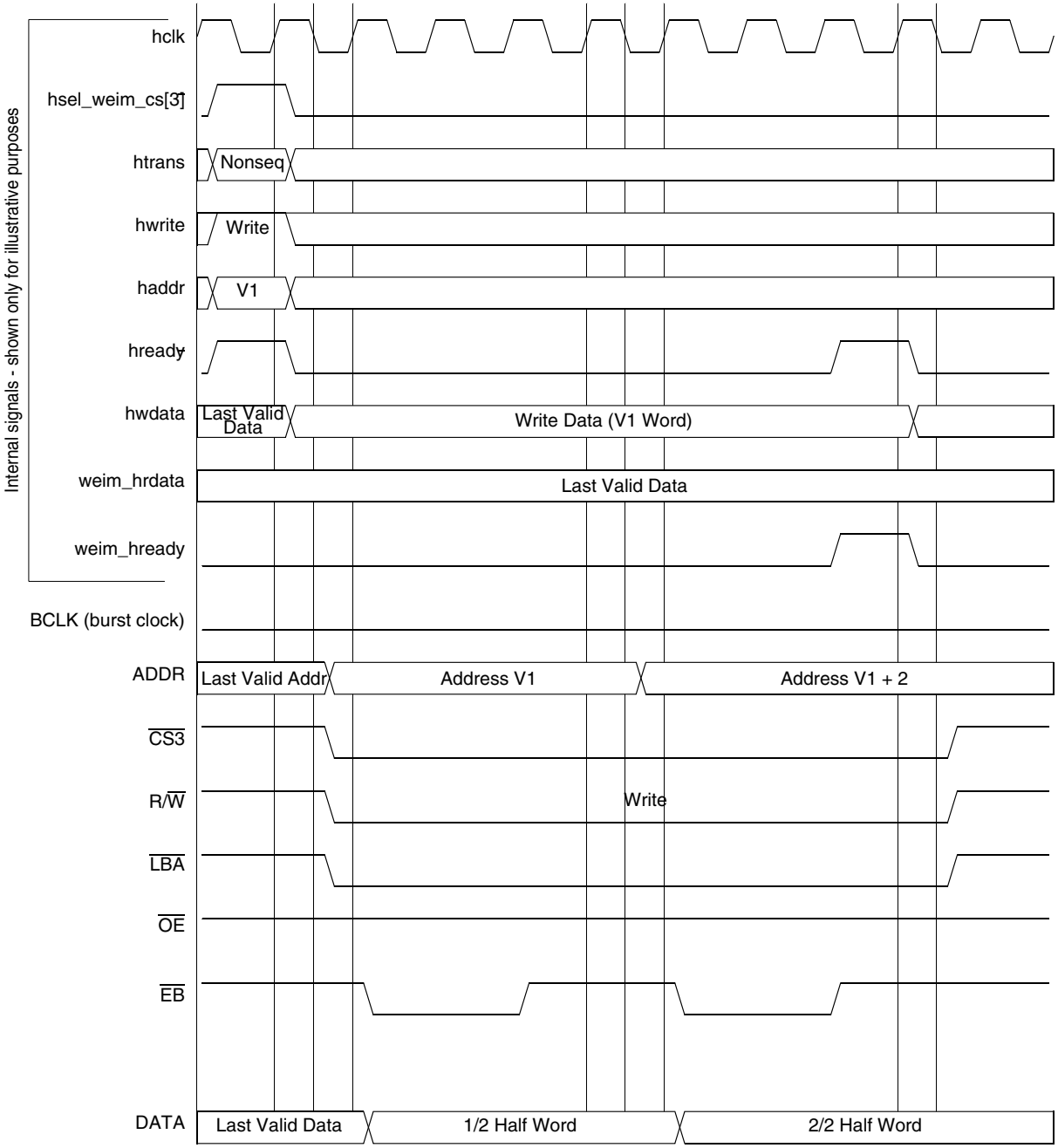

Figure 15. WSC = 3, WEA = 1, WEN = 3, A.WORD/E.HALF

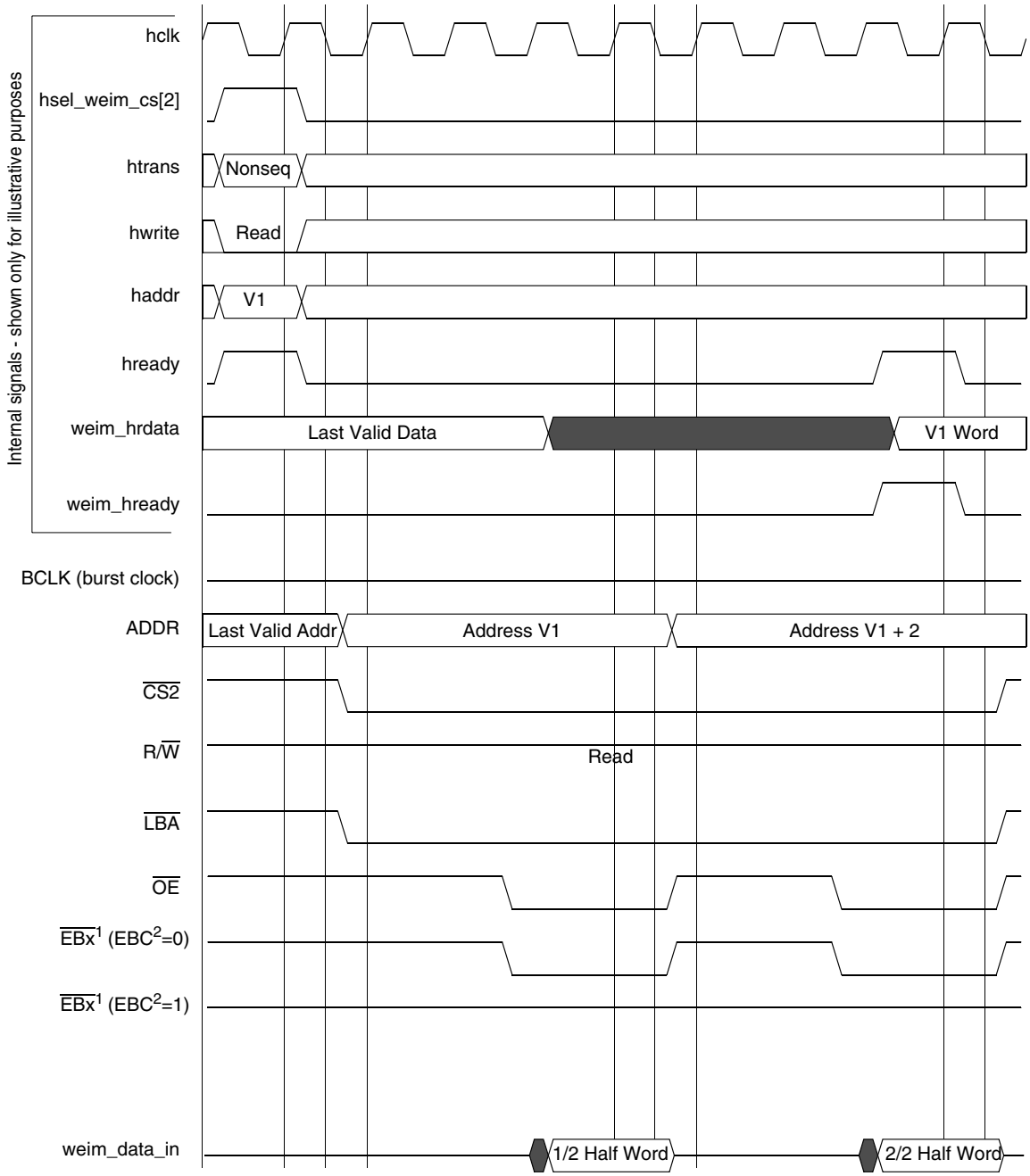

Note 1: x = 0, 1, 2 or 3
Note 2: EBC = Enable Byte Control bit (bit 11) on the Chip Select Control Register

Figure 16. WSC = 3, OEA = 4, A.WORD/E.HALF

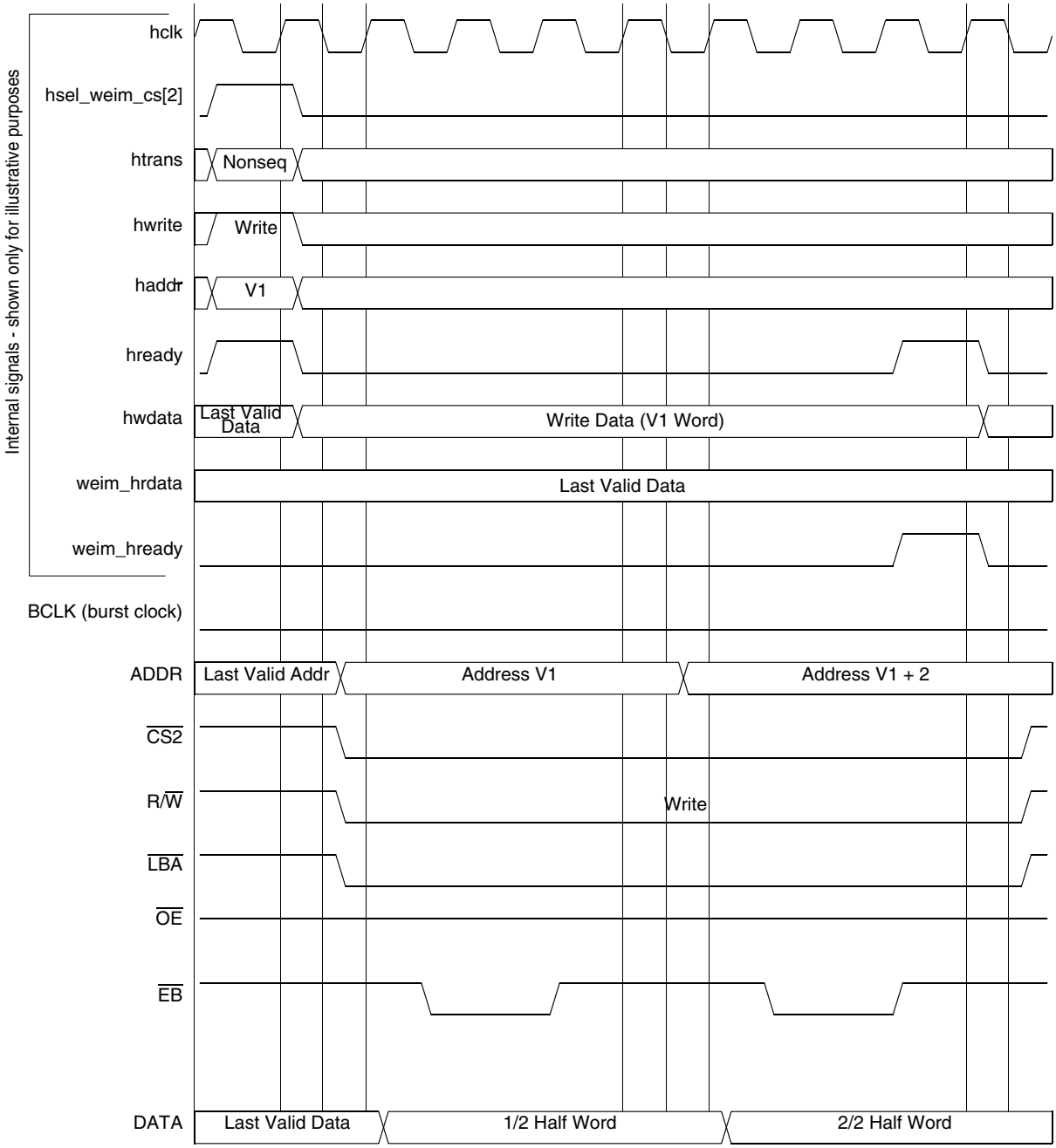

Figure 17. WSC = 3, WEA = 2, WEN = 3, A.WORD/E.HALF

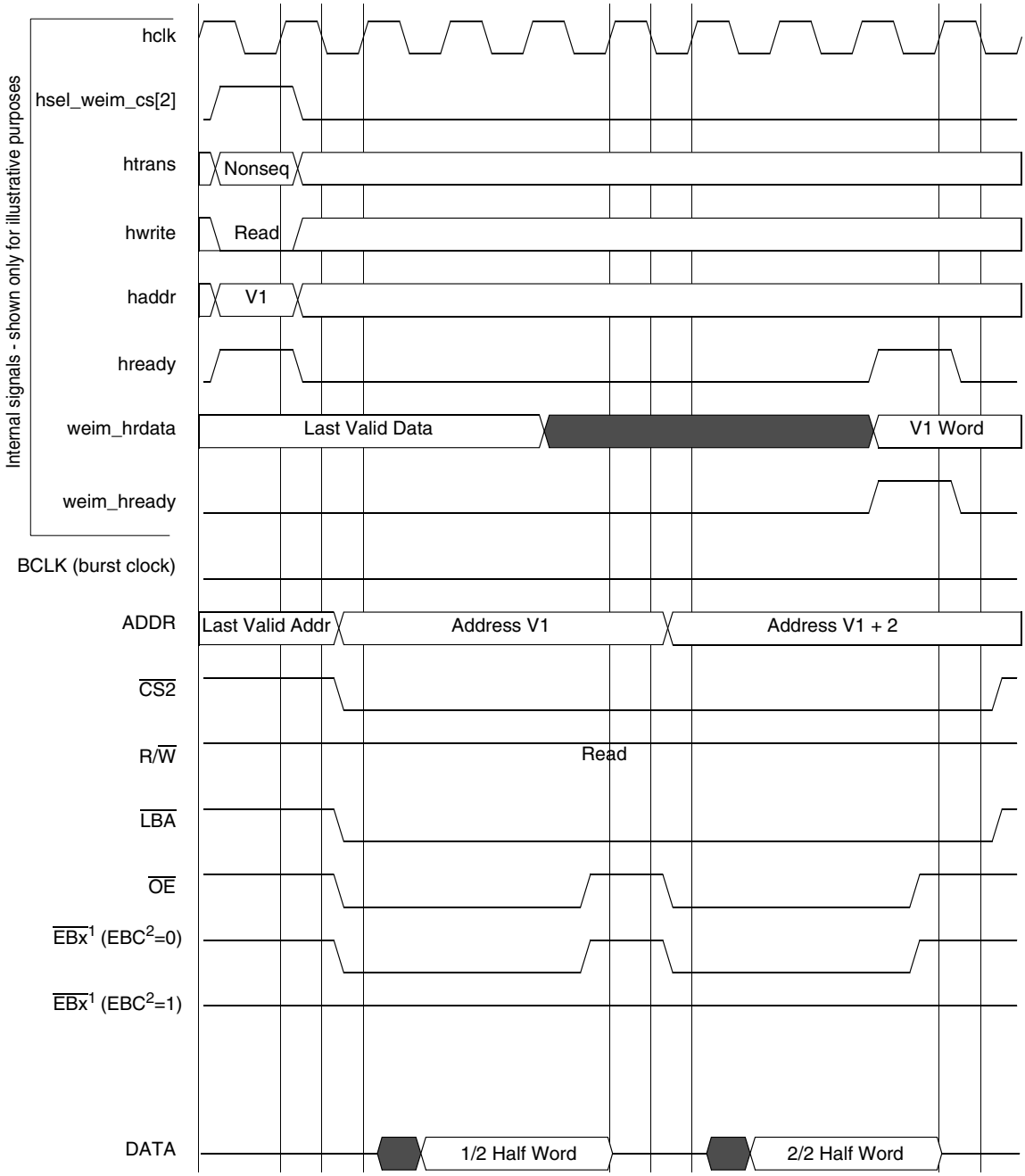

Note 1: x = 0, 1, 2 or 3
Note 2: EBC = Enable Byte Control bit (bit 11) on the Chip Select Control Register

Figure 18. WSC = 3, OEN = 2, A.WORD/E.HALF

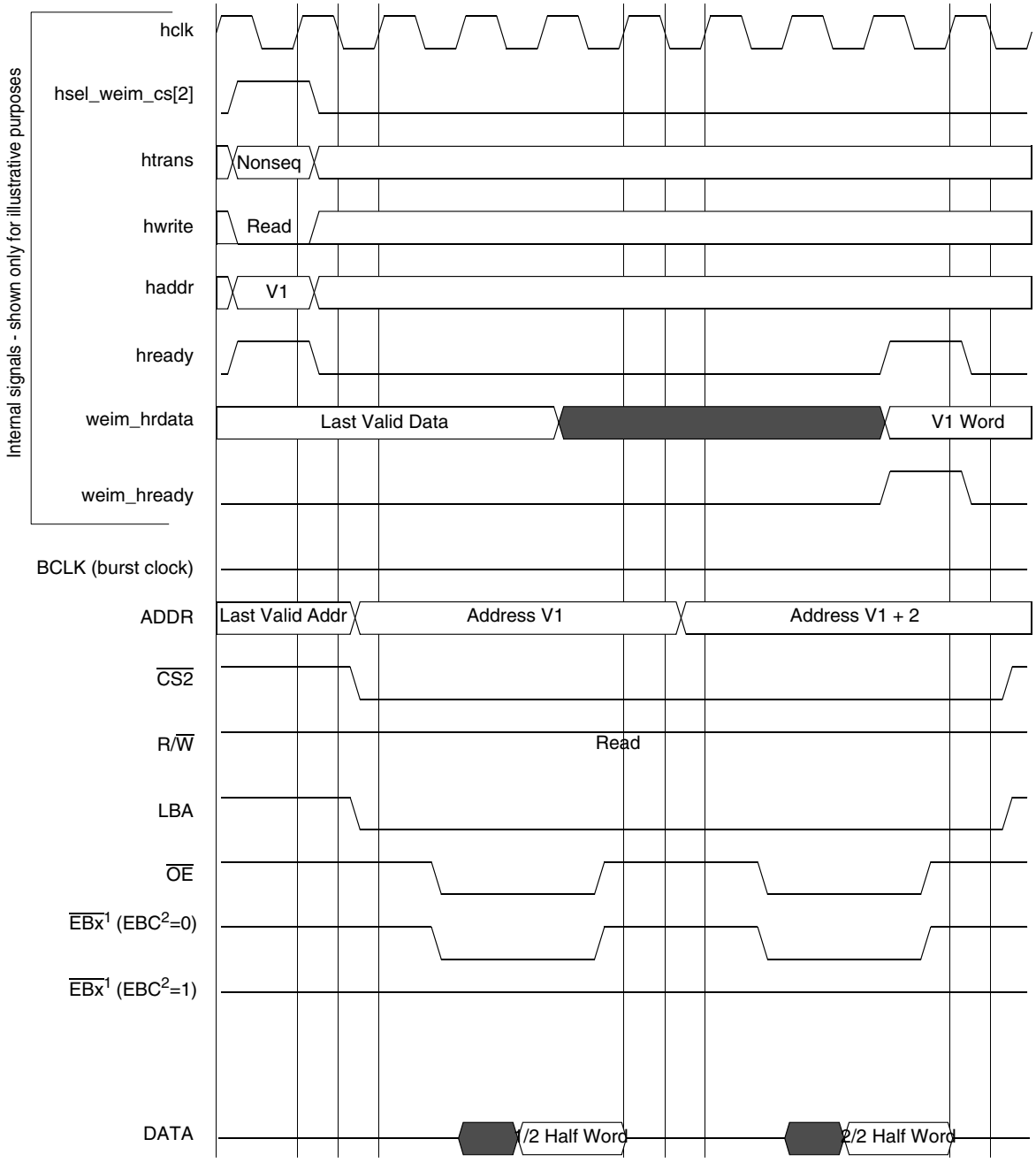

Note 1: x = 0, 1, 2 or 3
Note 2: EBC = Enable Byte Control bit (bit 11) on the Chip Select Control Register

Figure 19. WSC = 3, OEA = 2, OEN = 2, A.WORD/E.HALF

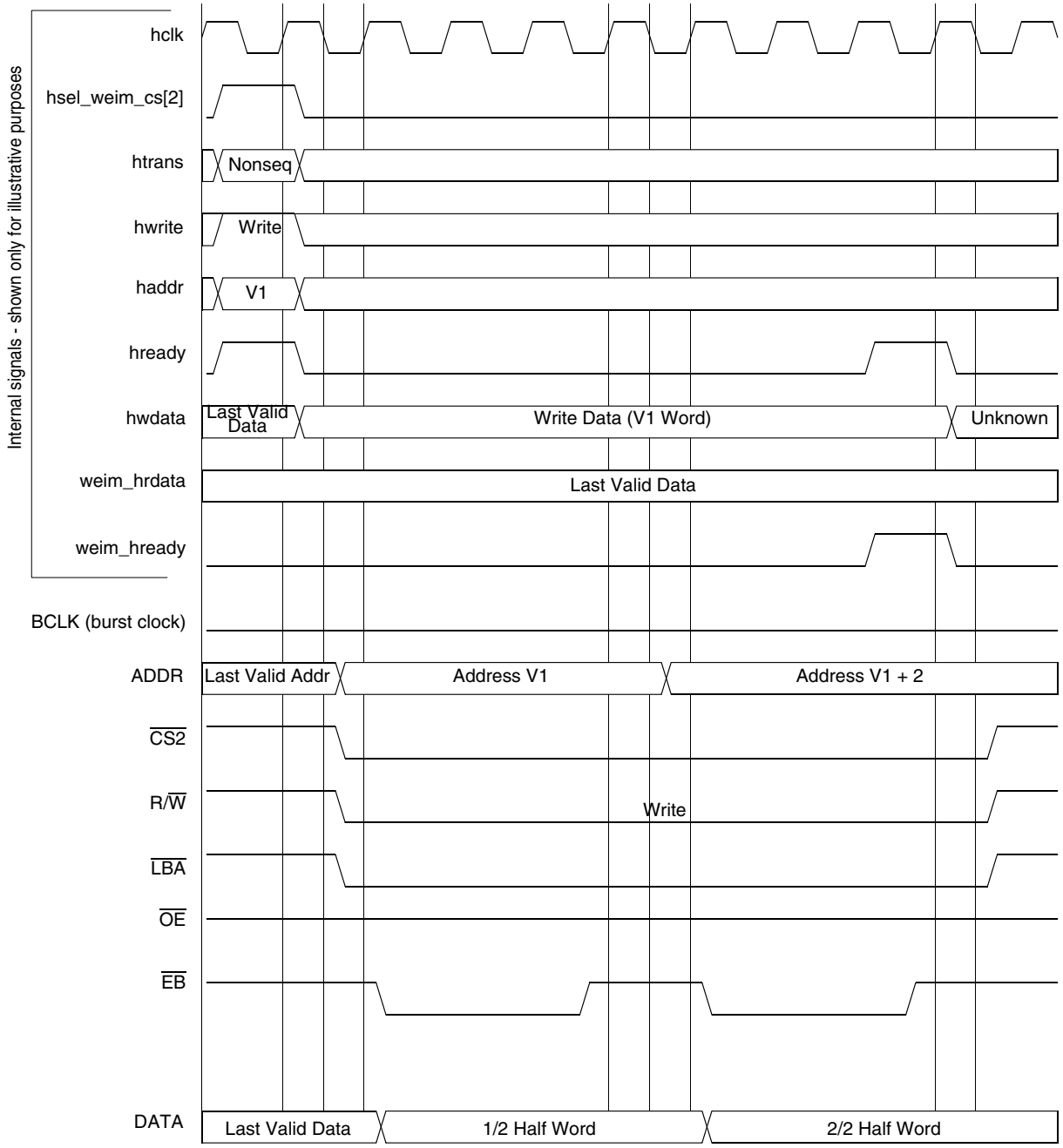

Figure 20. WSC = 2, WWS = 1, WEA = 1, WEN = 2, A.WORD/E.HALF

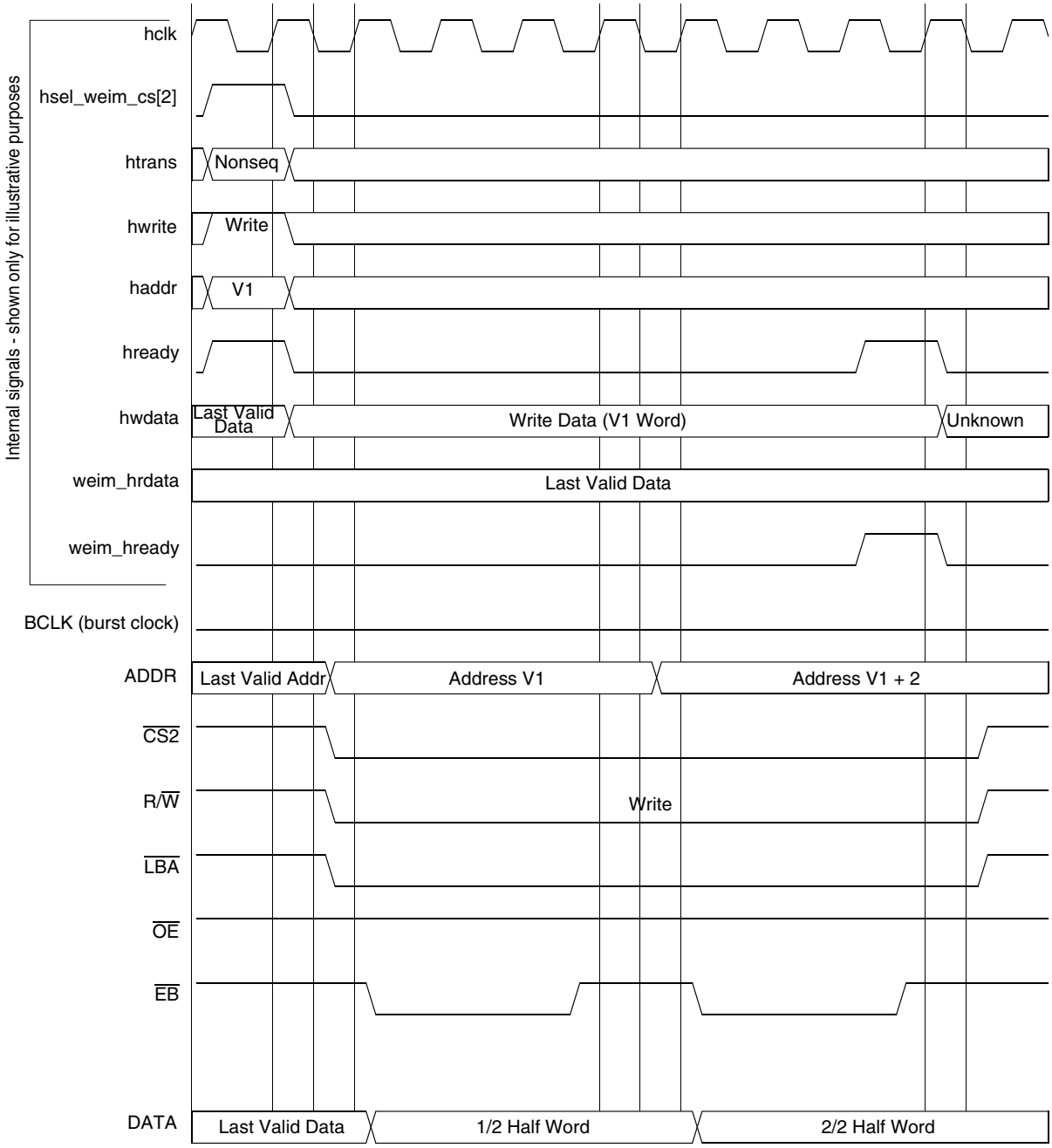

Figure 21. WSC = 1, WWS = 2, WEA = 1, WEN = 2, A.WORD/E.HALF

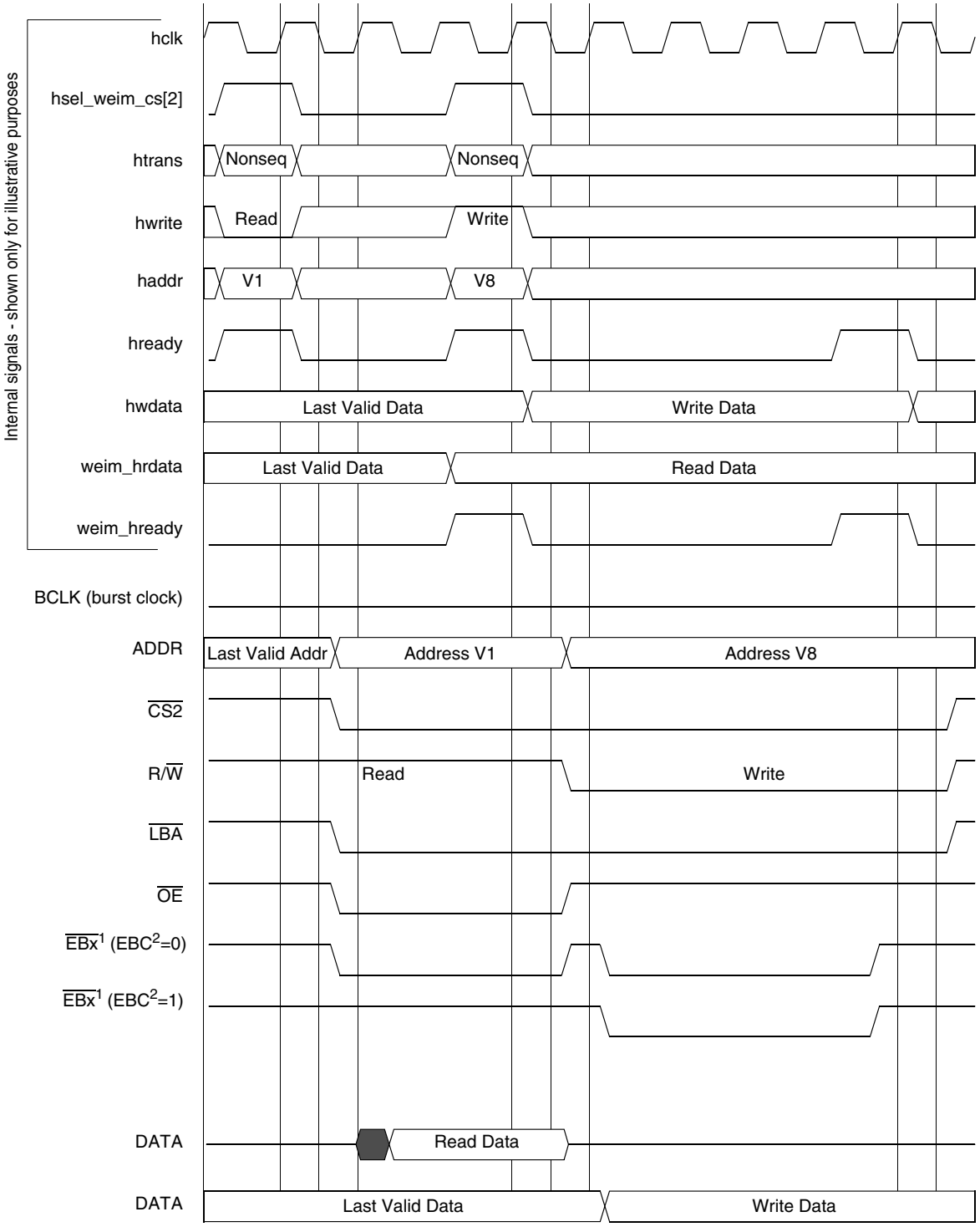

Note 1: x = 0, 1, 2 or 3
Note 2: EBC = Enable Byte Control bit (bit 11) on the Chip Select Control Register

Figure 22. WSC = 2, WWS = 2, WEA = 1, WEN = 2, A.HALF/E.HALF

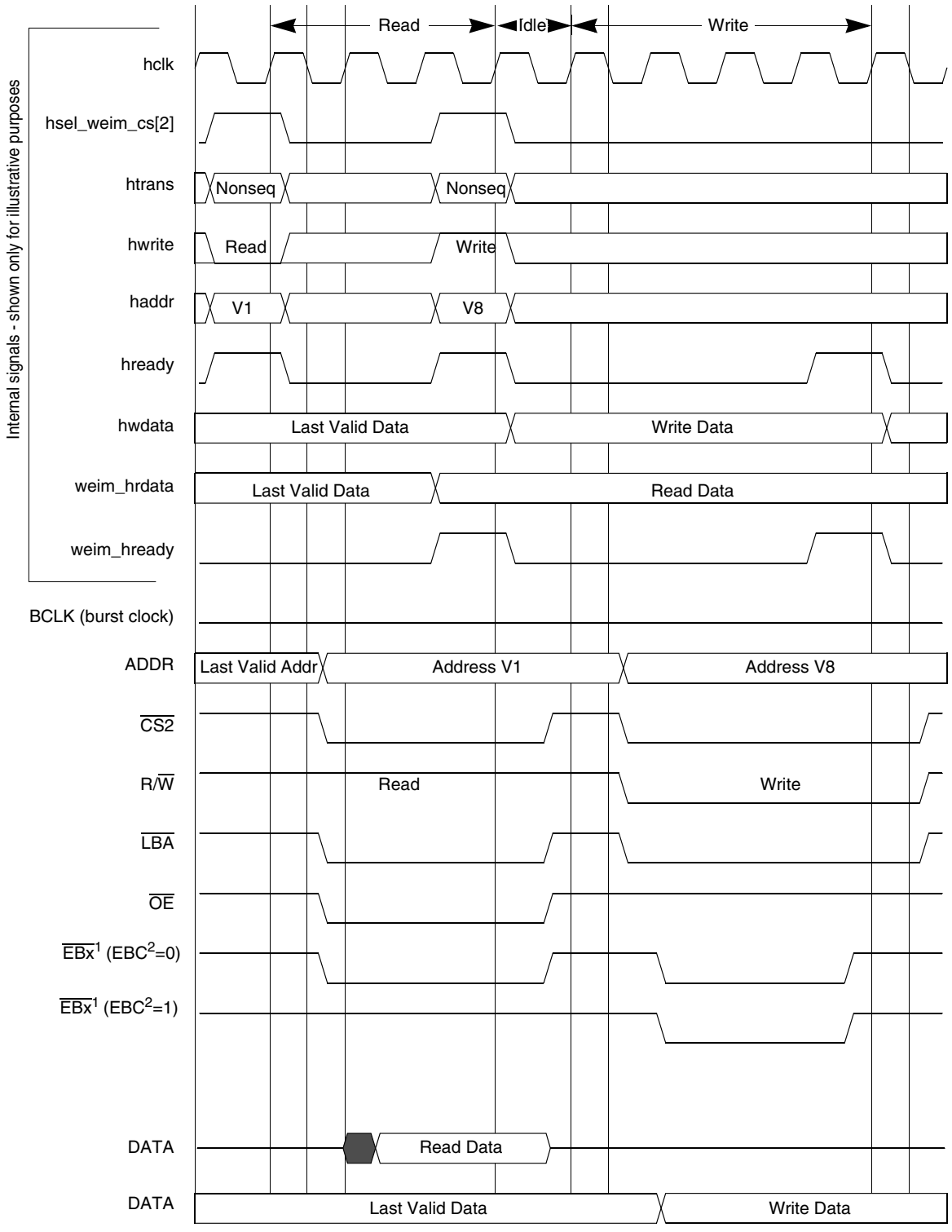

Note 1: x = 0, 1, 2 or 3
Note 2: EBC = Enable Byte Control bit (bit 11) on the Chip Select Control Register

Figure 23. WSC = 2, WWS = 1, WEA = 1, WEN = 2, EDC = 1, A.HALF/E.HALF

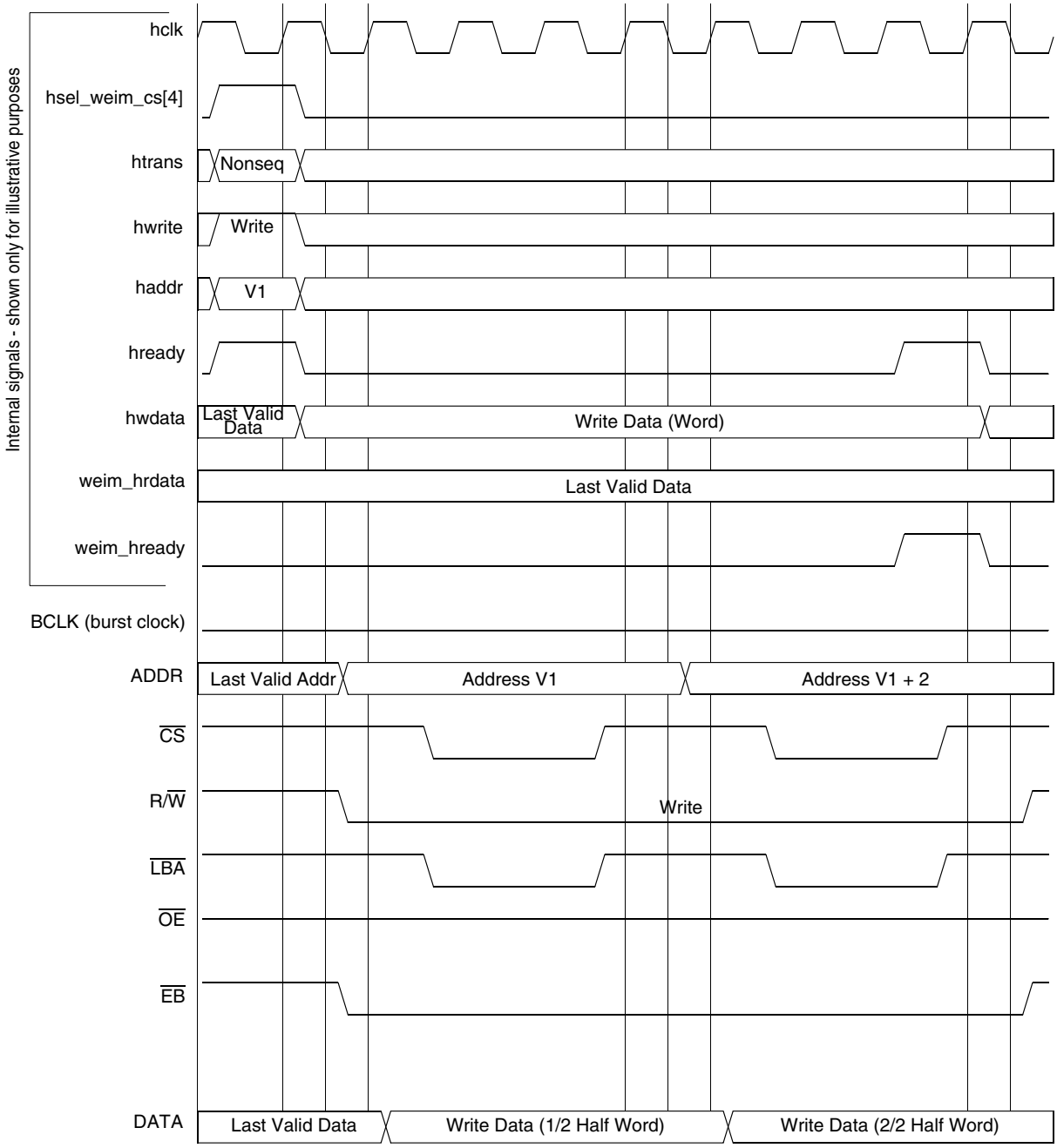

Figure 24. WSC = 2, CSA = 1, WWS = 1, A.WORD/E.HALF

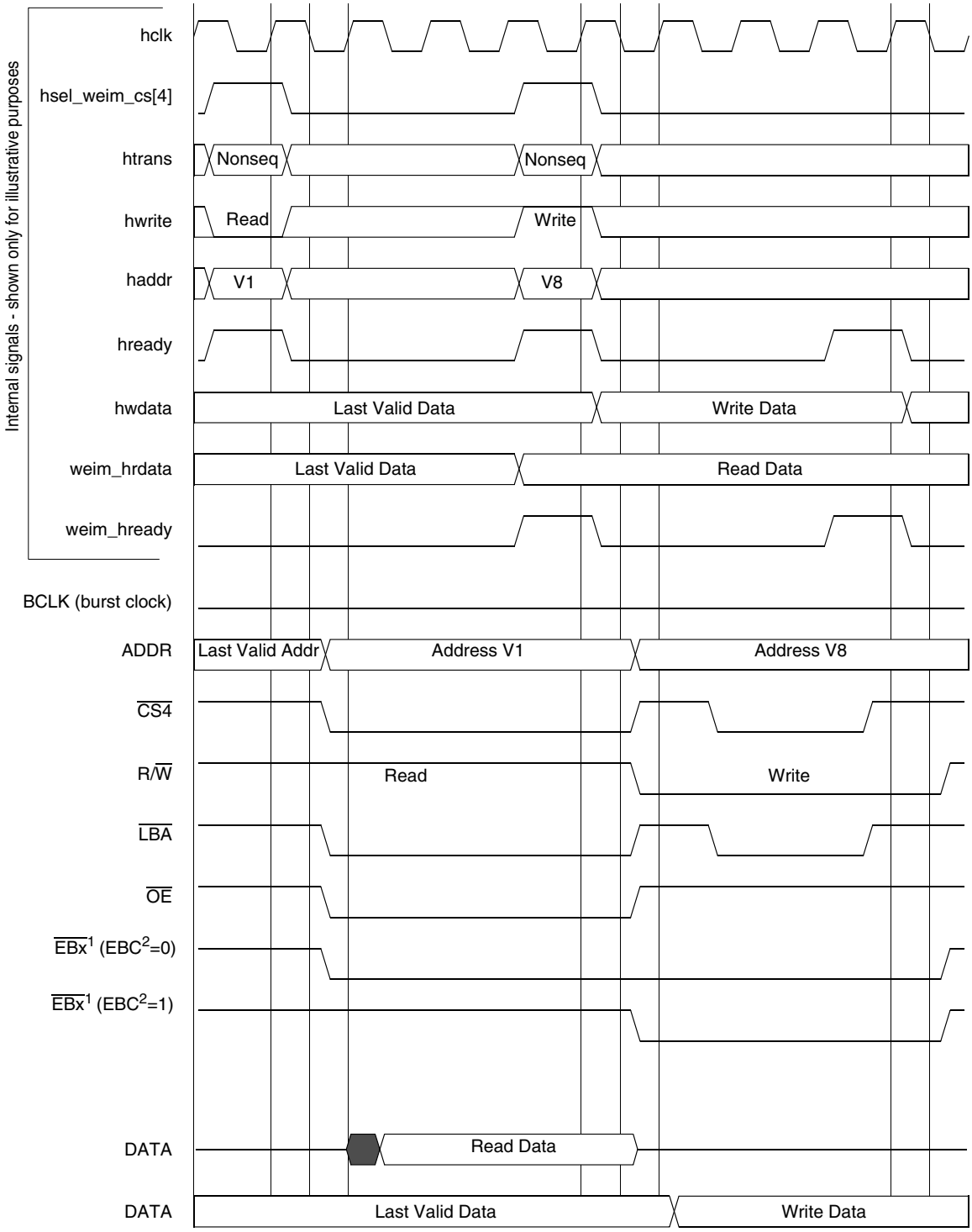

Note 1: x = 0, 1, 2 or 3
Note 2: EBC = Enable Byte Control bit (bit 11) on the Chip Select Control Register

Figure 25. WSC = 3, CSA = 1, A.HALF/E.HALF

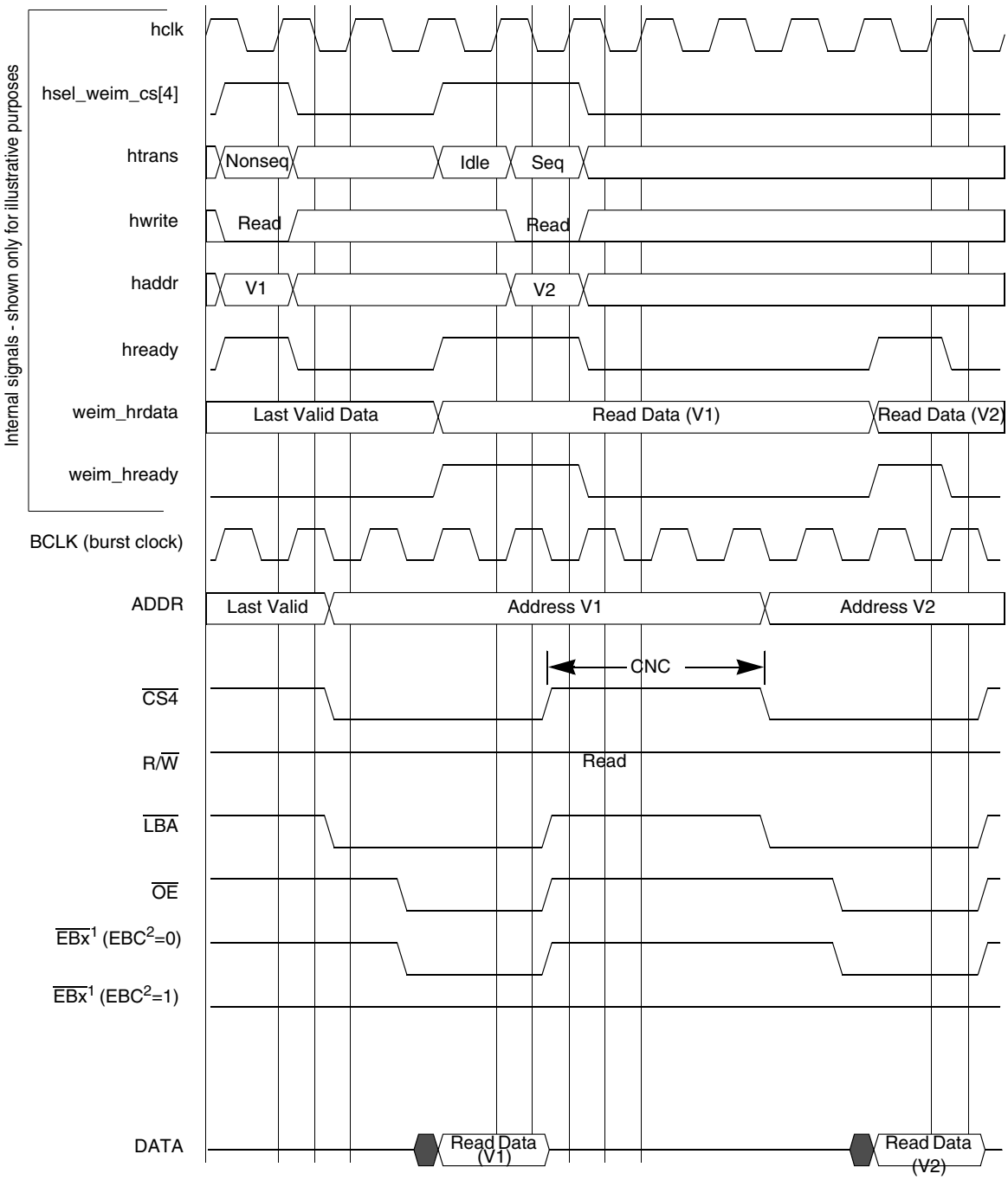

Note 1: x = 0, 1, 2 or 3
Note 2: EBC = Enable Byte Control bit (bit 11) on the Chip Select Control Register

Figure 26. WSC = 2, OEA = 2, CNC = 3, BCM = 1, A.HALF/E.HALF

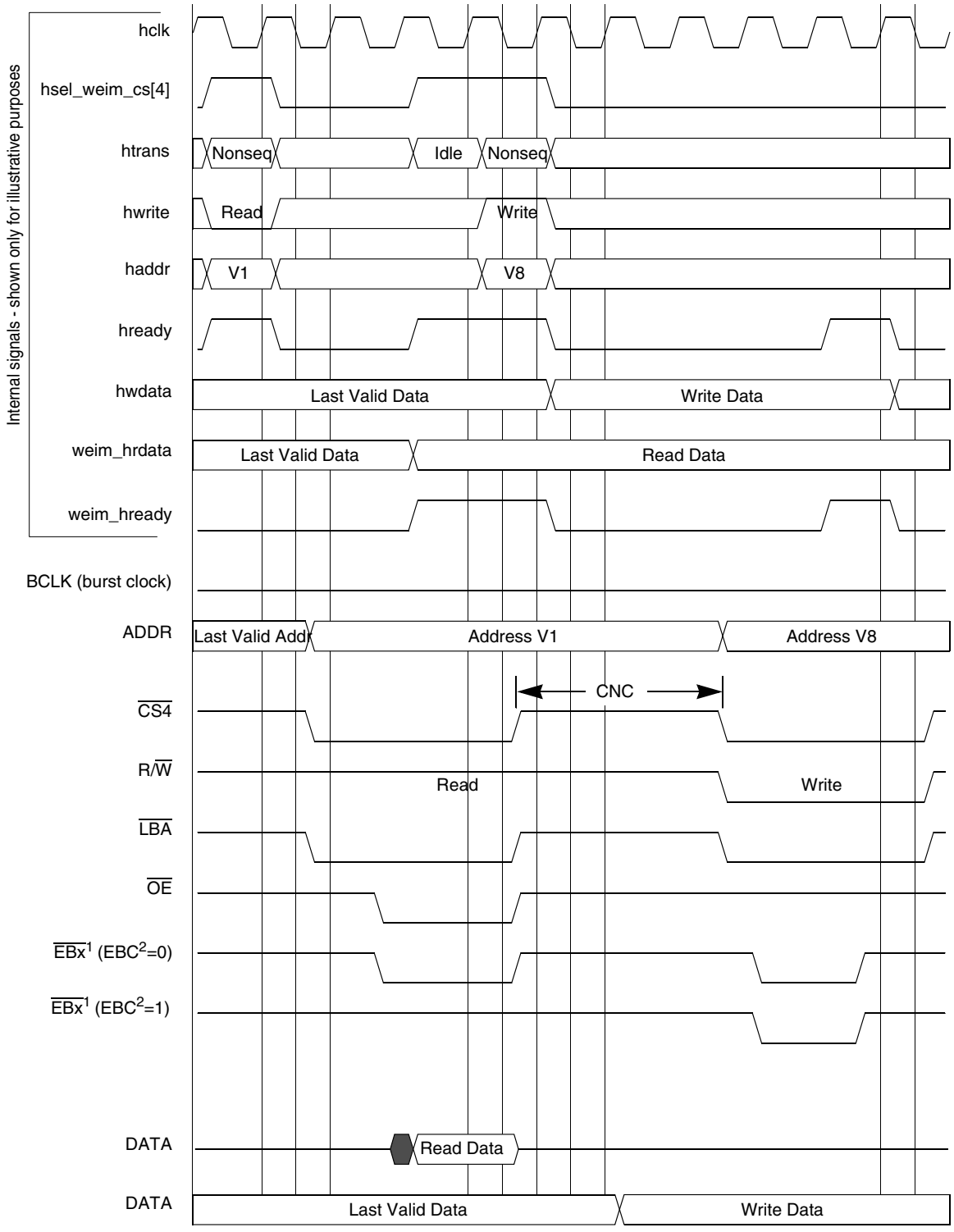

Note 1: x = 0, 1, 2 or 3
Note 2: EBC = Enable Byte Control bit (bit 11) on the Chip Select Control Register

Figure 27. WSC = 2, OEA = 2, WEA = 1, WEN = 2, CNC = 3, A.HALF/E.HALF

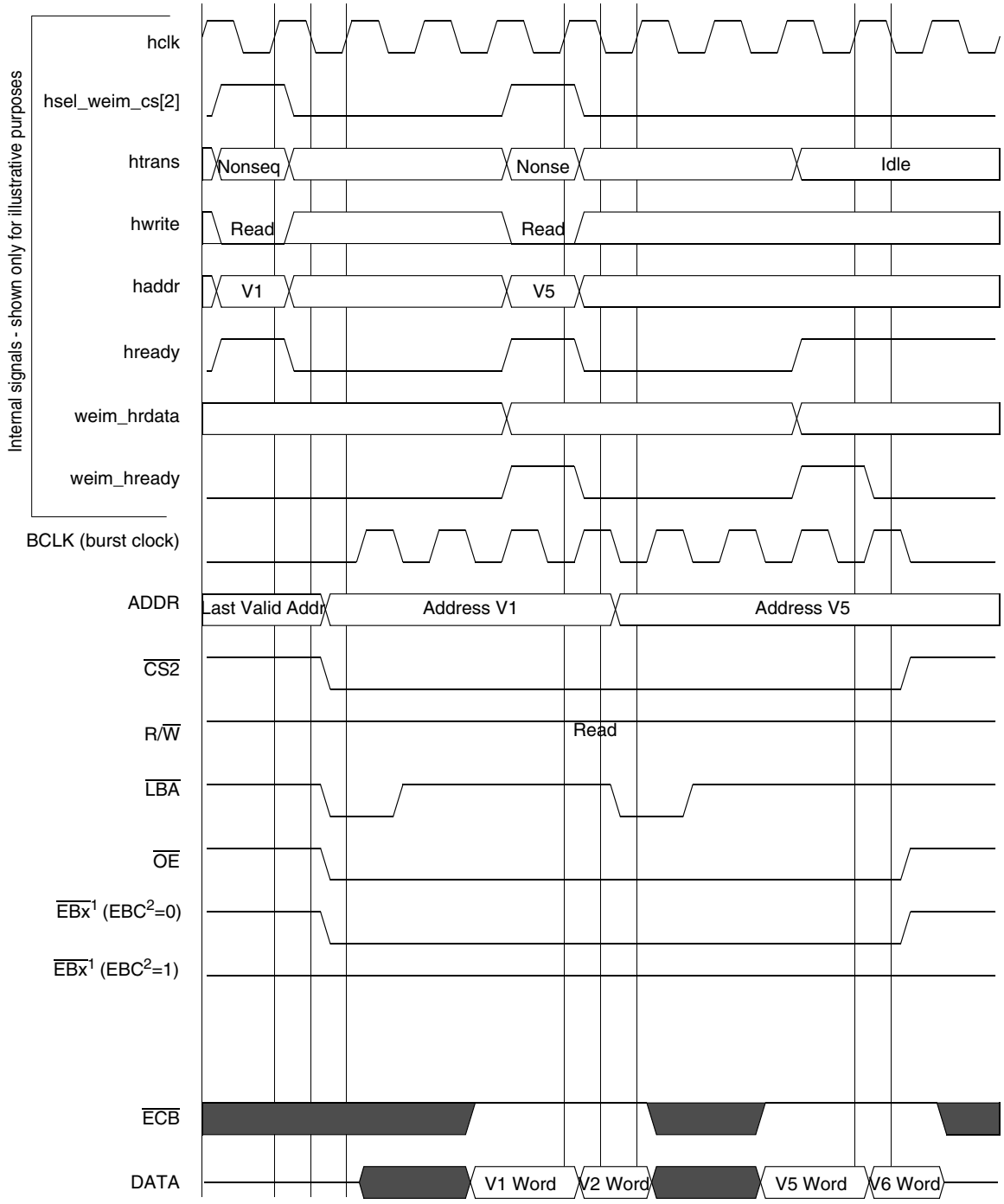

Note 1: x = 0, 1, 2 or 3
Note 2: EBC = Enable Byte Control bit (bit 11) on the Chip Select Control Register

Figure 28. WSC = 3, SYNC = 1, A.HALF/E.HALF

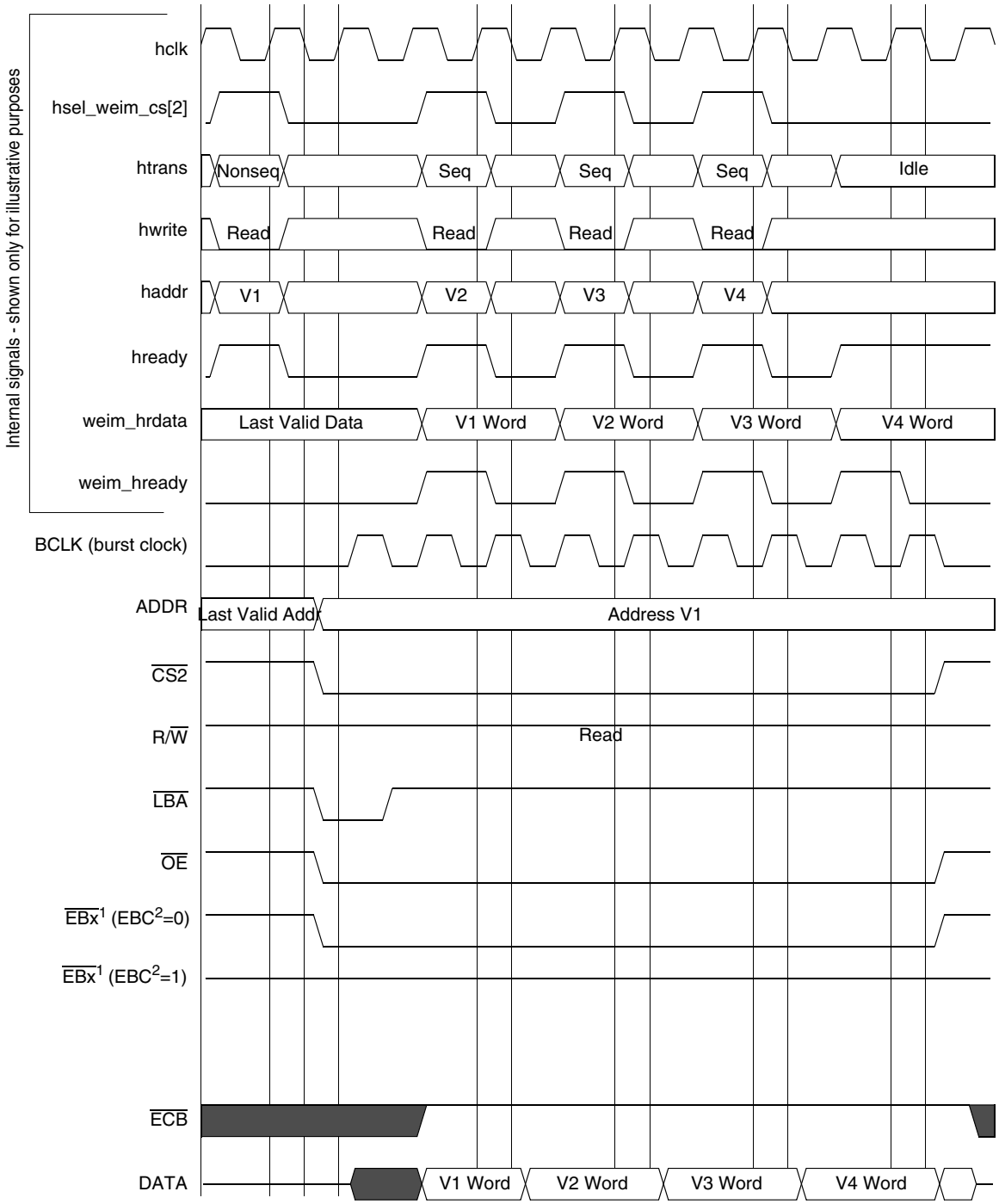

Note 1: x = 0, 1, 2 or 3
Note 2: EBC = Enable Byte Control bit (bit 11) on the Chip Select Control Register

Figure 29. WSC = 2, SYNC = 1, DOL = [1/0], A.WORD/E.WORD

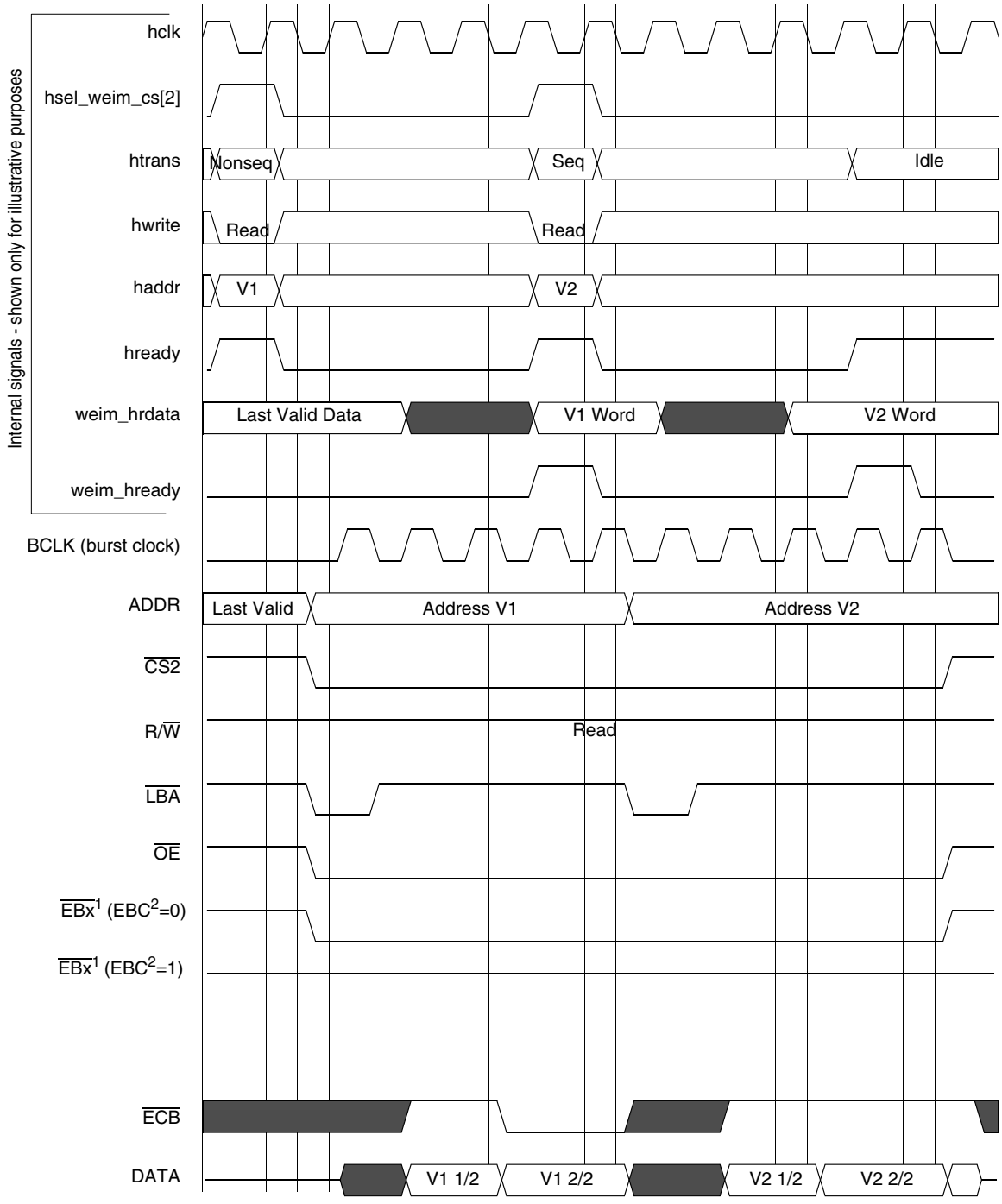

Note 1: x = 0, 1, 2 or 3
Note 2: EBC = Enable Byte Control bit (bit 11) on the Chip Select Control Register

Figure 30. WSC = 2, SYNC = 1, DOL = [1/0], A.WORD/E.HALF

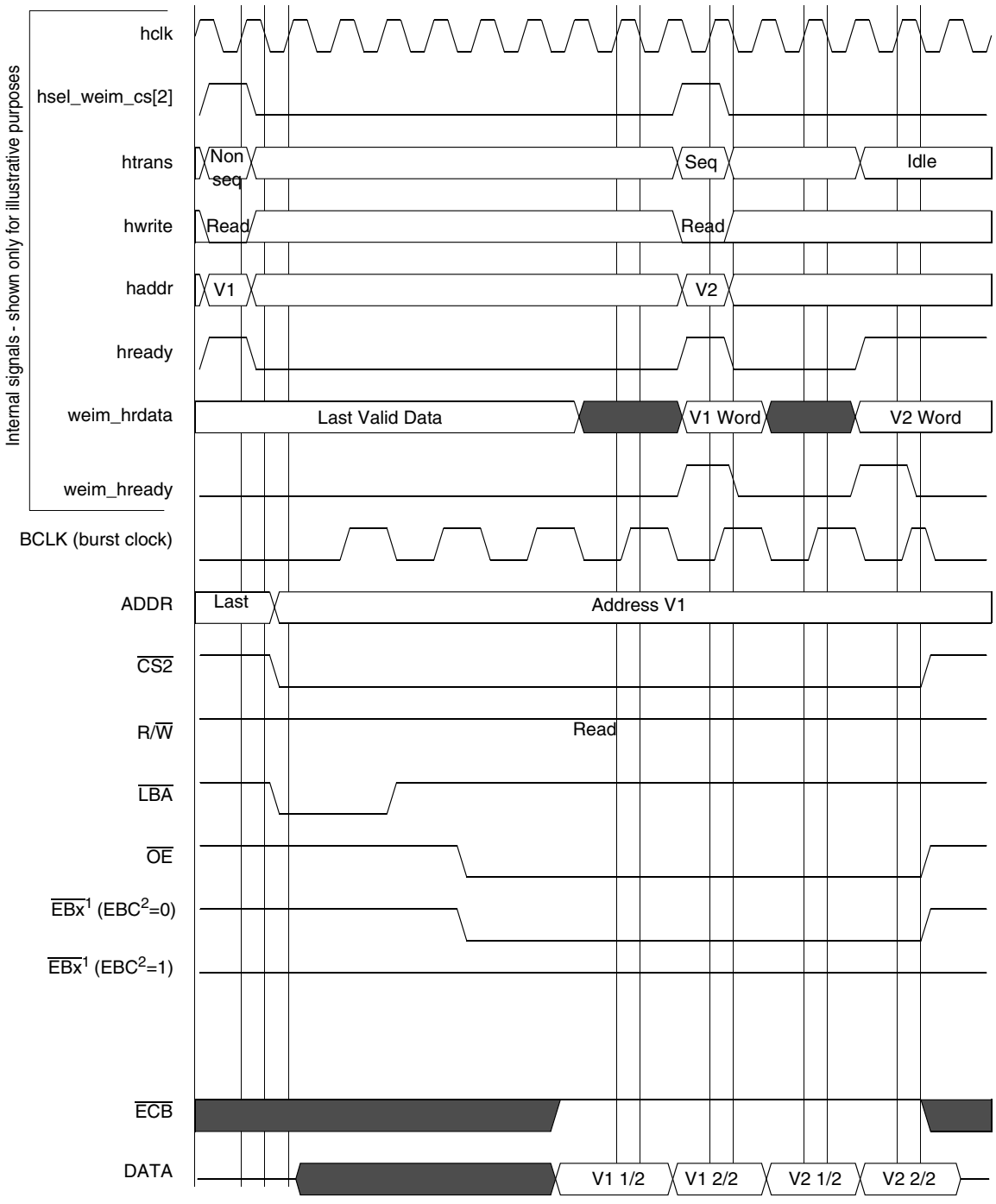

Note 1: x = 0, 1, 2 or 3
Note 2: EBC = Enable Byte Control bit (bit 11) on the Chip Select Control Register

Figure 31. WSC = 7, OEA = 8, SYNC = 1, DOL = 1, BCD = 1, BCS = 2, A.WORD/E.HALF

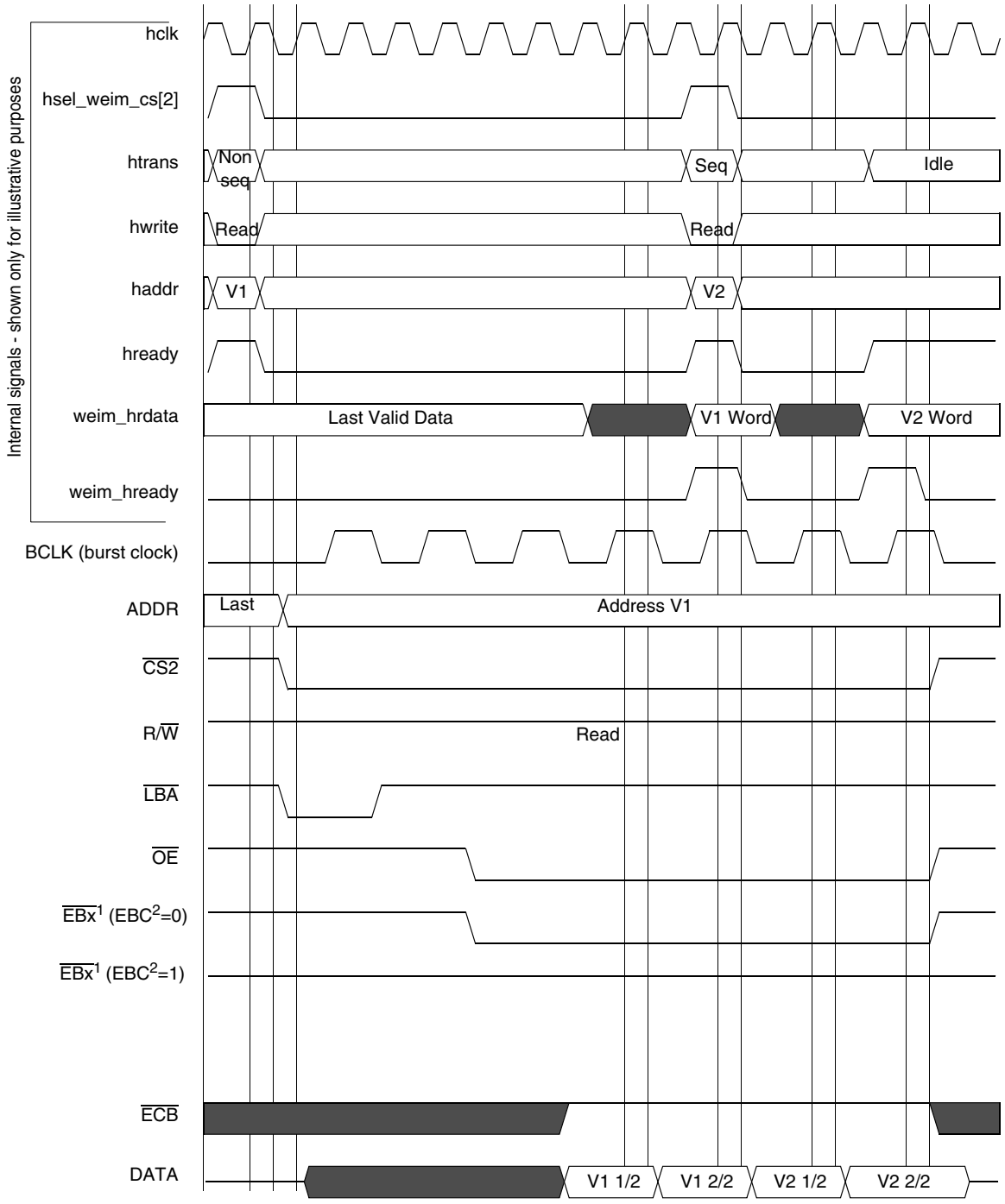

Note 1: x = 0, 1, 2 or 3
Note 2: EBC = Enable Byte Control bit (bit 11) on the Chip Select Control Register

Figure 32. WSC = 7, OEA = 8, SYNC = 1, DOL = 1, BCD = 1, BCS = 1, A.WORD/E.HALF

4.4.4 Non-TFT Panel Timing

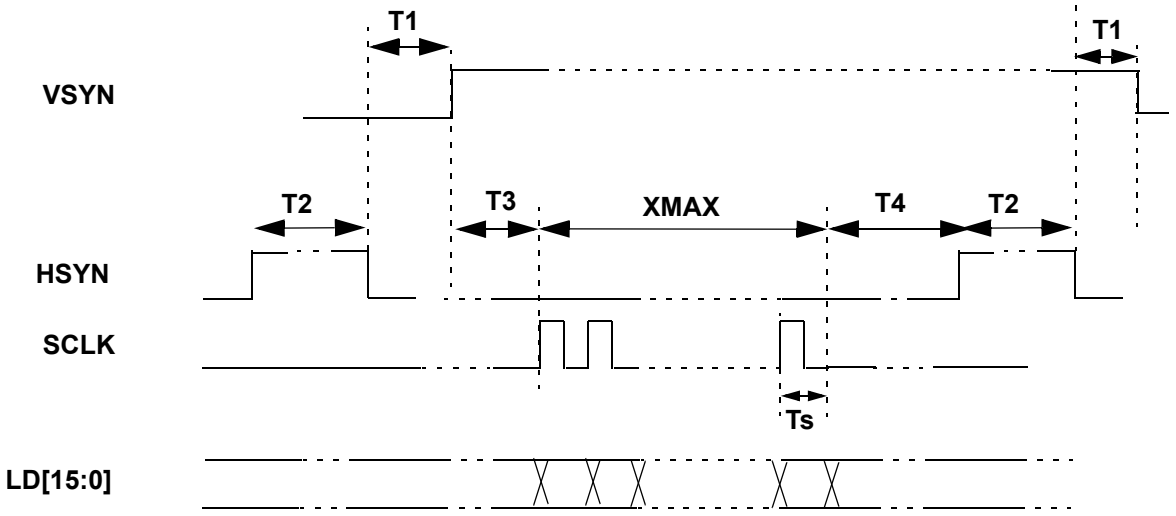

Figure 33. Non-TFT Panel Timing

Table 17. Non TFT Panel Timing Diagram

Symbol	Parameter	Allowed Register Minimum Value[1, 2]	Actual Value	Unit
T1	HSYN to VSYN delay[3]	0	HWAIT2+2	Tpix[4]
T2	HSYN pulse width	0	HWIDTH+1	Tpix
T3	VSYN to SCLK	–	$0 \le T3 \le Ts$[5]	–
T4	SCLK to HSYN	0	HWAIT1+1	Tpix

1 Maximum frequency of LCDC_CLK is 48 MHz, which is controlled by Peripheral Clock Divider Register.

2 Maximum frequency of SCLK is HCLK / 5, otherwise LD output will be wrong.

3 VSYN, HSYN and SCLK can be programmed as active high or active low. In the above timing diagram, all these 3 signals are active high.

4 Tpix is the pixel clock period which equals LCDC_CLK period * (PCD + 1).

5 Ts is the shift clock period. Ts = Tpix * (panel data bus width).

4.5 Pen ADC Specifications

The specifications for the pen ADC are shown in Table 18 through Table 20.

Table 18. Pen ADC System Performance

Full Range Resolution[1]	13 bits
Non-Linearity Error[1]	4 bits
Accuracy [1]	9 bits

1 Tested under input = 0~1.8V at 25°C

Table 19. Pen ADC Test Conditions

Vp max	1800 mV	ip max	+7 µA
Vp min	GND	ip min	1.5 µA
Vn	GND	in	1.5 µA
Sample frequency		12 MHz	
Sample rate		1.2 KHz	
Input frequency		100 Hz	
Input range		0–1800 mV	
Note: Ru1 = Ru2 = 200K			

Table 20. Pen ADC Absolute Rating

ip max	+9.5 µA
ip min	-2.5 µA
in max	+9.5 µA
in min	-2.5 µA

4.6 ASP Touch Panel Controller

The following sections contain the electrical specifications of the ASP touch panel controller. The value of parameters and their corresponding measuring conditions are mentioned as well.

4.6.1 Electrical Specifications

Test conditions: Temperature = 25º C, QVDD = 1800mV.

Table 21. ASP Touch Panel Controller Electrical Spec

Parameter	Minimum	Typical	Maximum	Unit
Offset	–	32768	–	–
Offset Error	–	–	8199	–
Gain	–	13.65	–	mV^{-1}
Gain Error	–	–	33%	–
DNL	8	9	–	Bits
INL	–	0	–	Bits
Accuracy (without missing code)	8	9	–	Bits
Operating Voltage Range (Pen)	–	–	QVDD	mV
Operating Voltage Range (U)	Negative QVDD	–	QVDD	mV
On-resistance of switches SW[8:1]	–	10	–	Ohm

Note that QVDD should be 1800mV.

4.6.2 Gain Calculations

The ideal mapping of input voltage to output digital sample is defined as follows:

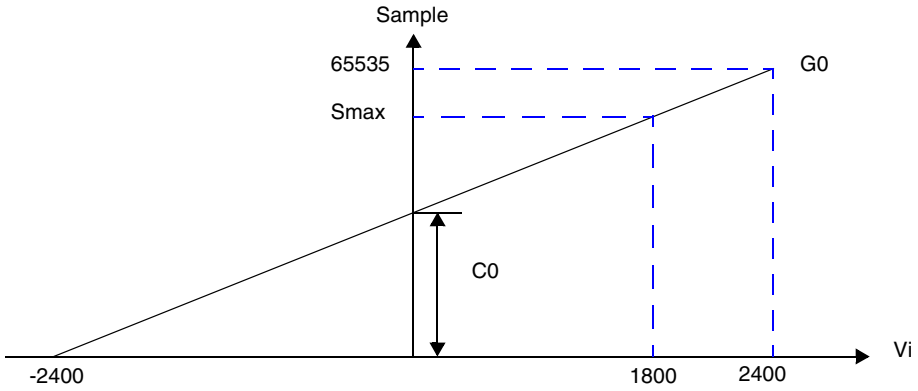

Figure 34. Gain Calculations

In general, the mapping function is:

$$S = G * V + C$$

Where V is input, S is output, G is the slope, and C is the y-intercept.

Nominal Gain $G_0 = 65535 / 4800 = 13.65mV^{-1}$
Nominal Offset $C_0 = 65535 / 2 = 32767$

4.6.3 Offset Calculations

The ideal mapping of input voltage to output digital sample is defined as:

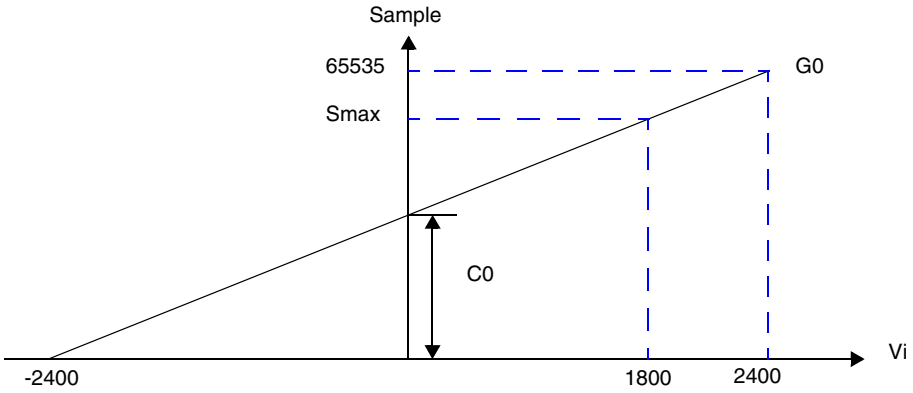

Figure 35. Offset Calculations

In general, the mapping function is:

$$S = G * V + C$$

Where V is input, S is output, G is the slope, and C is the y-intercept.

Nominal Gain $G_0 = 65535 / 4800 = 13.65mV^{-1}$
Nominal Offset $C_0 = 65535 / 2 = 32767$

4.6.4 Gain Error Calculations

Gain error calculations are made using the information in this section.

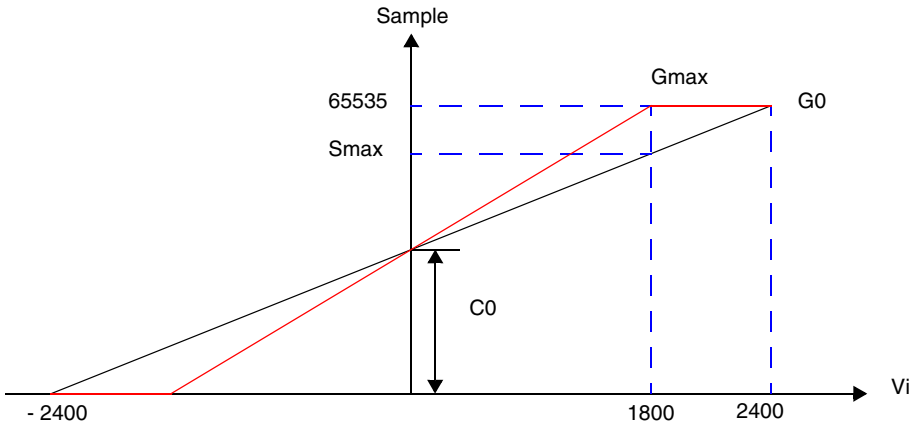

Figure 36. Gain Error Calculations

Assuming the offset remains unchanged, the mapping is rotated around y-intercept to determine the maximum gain allowed. This occurs when the sample at 1800mV has just reached the ceiling of the 16-bit range, 65535.

Maximum Offset $G_{max,}$

G_{max} $= (65535 - C_{0)} / 1800$
$= (65535 - 32767) / 1800$
$= 18.20$

Gain Error $G_{r,}$

G_r $= (G_{max} - G_0) / G_0 * 100\%$
$= (18.20 - 13.65) / 13.65 * 100\%$
$= 33\%$

4.7 Bluetooth Accelerator

CAUTION

On-chip accelerator hardware is not supported by software. An external Bluetooth chip interfaced to a UART is recommended.

The Bluetooth Accelerator (BTA) radio interface supports the Wireless RF Transceiver, MC13180 using an SPI interface. This section provides the data bus timing diagrams and SPI interface timing diagrams shown in Figure 37 and Figure 38, and the associated parameters shown in Table 22 and Table 23.

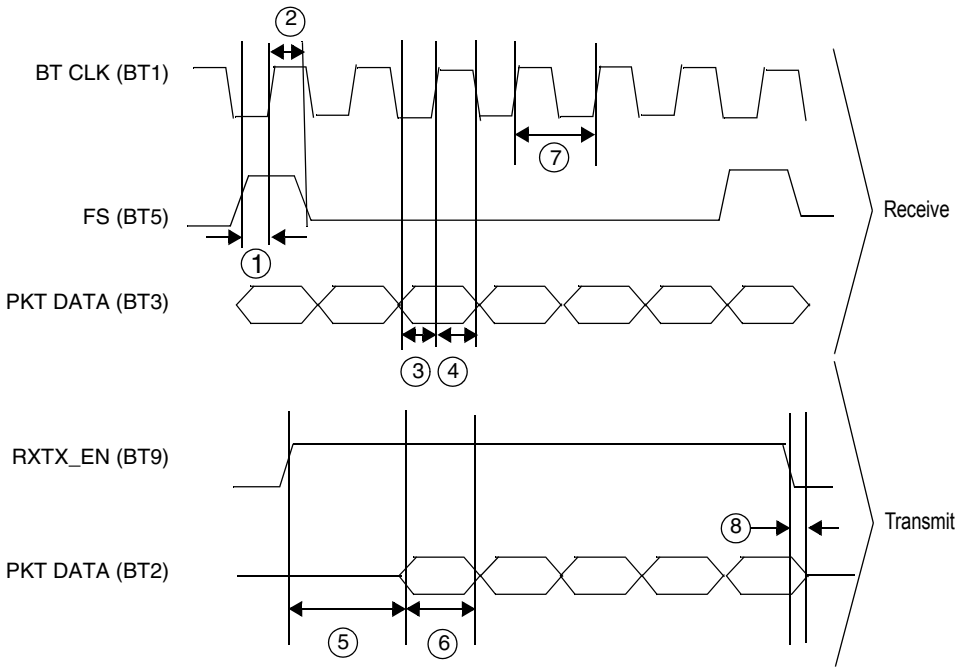

Figure 37. MC13180 Data Bus Timing Diagram

Table 22. MC13180 Data Bus Timing Parameter Table

Ref No.	Parameter	Minimum	Typical	Maximum	Unit
1	FrameSync setup time relative to BT CLK rising edge[1]	–	4	–	ns
2	FrameSync hold time relative to BT CLK rising edge[1]	–	12	–	ns
3	Receive Data setup time relative to BT CLK rising edge[1]	–	6	–	ns
4	Receive Data hold time relative to BT CLK rising edge[1]	–	13	–	ns
5	Transmit Data setup time relative to RXTX_EN rising edge[2]	172.5	–	192.5	µs
6	TX DATA period	1000 +/- 0.02			ns
7	BT CLK duty cycle	40	–	60	%
8	Transmit Data hold time relative to RXTX_EN falling edge	4	–	10	µs

1 Please refer to 2.4 GHz RF Transceiver Module (MC13180) Technical Data documentation.

2 The setup and hold times of RX_TX_EN can be adjusted by programming Time_A_B register (0x00216050) and RF_Status (0x0021605C) registers.

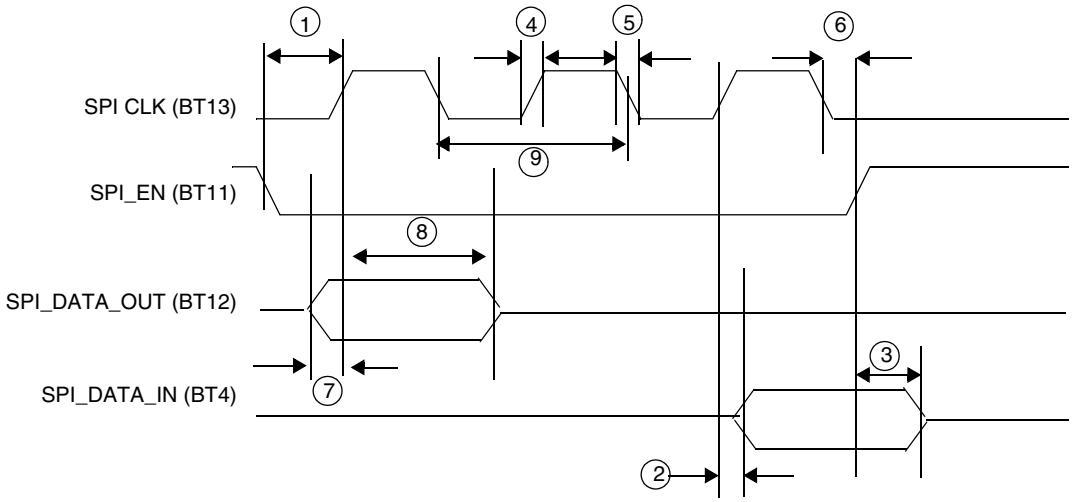

Figure 38. SPI Interface Timing Diagram Using MC13180

Table 23. SPI Interface Timing Parameter Table Using MC13180

Ref No.	Parameter	Minimum	Maximum	Unit
1	SPI_EN setup time relative to rising edge of SPI_CLK	15	–	ns
2	Transmit data delay time relative to rising edge of SPI_CLK	0	15	ns
3	Transmit data hold time relative to rising edge of SPI_EN	0	15	ns
4	SPI_CLK rise time	0	25	ns
5	SPI_CLK fall time	0	25	ns
6	SPI_EN hold time relative to falling edge of SPI_CLK	15	–	ns
7	Receive data setup time relative to falling edge of SPI_CLK[1]	15	–	ns
8	Receive data hold time relative to falling edge of SPI_CLK[1]	15	–	ns
9	SPI_CLK frequency, 50% duty cycle required[1]	–	20	MHz

[1] The SPI_CLK clock frequency and duty cycle, setup and hold times of receive data can be set by programming SPI_Control (0x00216138) register together with system clock.

4.8 SPI Timing Diagrams

To use the internal transmit (TX) and receive (RX) data FIFOs when the SPI 1 module is configured as a master, two control signals are used for data transfer rate control: the $\overline{SS}$ signal (output) and the $\overline{SPI_RDY}$ signal (input). The SPI1 Sample Period Control Register (PERIODREG1) and the SPI2 Sample Period Control Register (PERIODREG2) can also be programmed to a fixed data transfer rate for either SPI 1 or SPI 2. When the SPI 1 module is configured as a slave, the user can configure the SPI1 Control Register (CONTROLREG1) to match the external SPI master's timing. In this configuration, $\overline{SS}$ becomes an input signal, and is used to latch data into or load data out to the internal data shift registers, as well as to increment the data FIFO. Figure 39 through Figure 43 show the timing relationship of the master SPI using different triggering mechanisms.

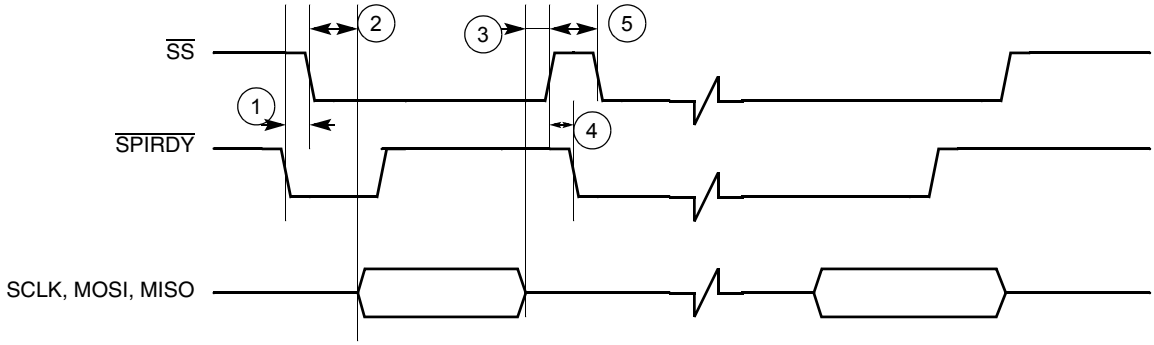

Figure 39. Master SPI Timing Diagram Using SPI_RDY Edge Trigger

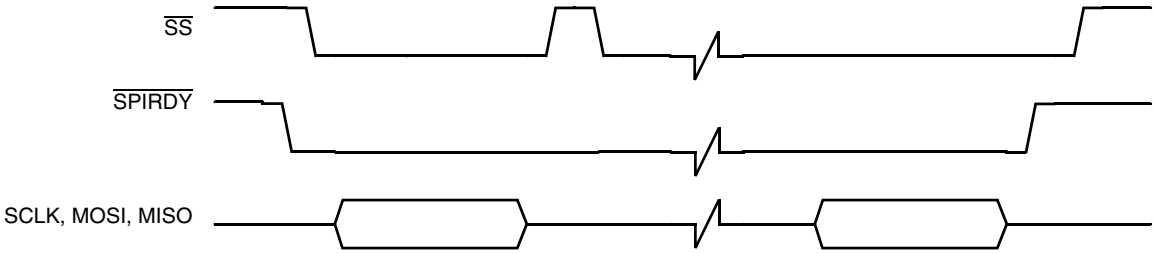

Figure 40. Master SPI Timing Diagram Using SPI_RDY Level Trigger

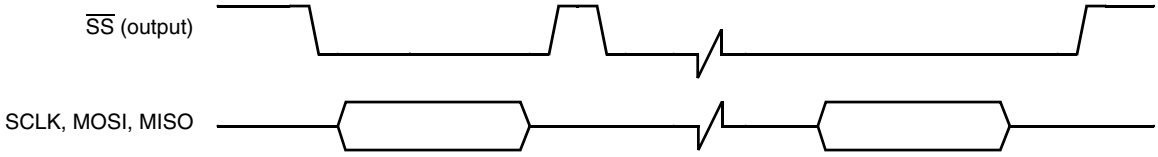

Figure 41. Master SPI Timing Diagram Ignore SPI_RDY Level Trigger

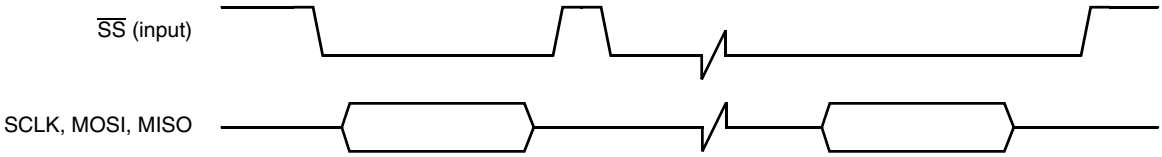

Figure 42. Slave SPI Timing Diagram FIFO Advanced by BIT COUNT

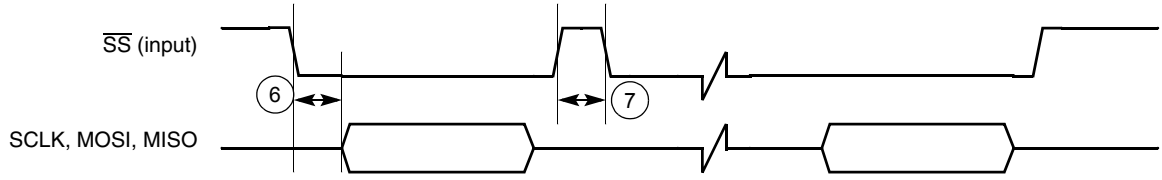

Figure 43. Slave SPI Timing Diagram FIFO Advanced by SS Rising Edge

Table 24. Timing Parameter Table for Figure 39 through Figure 43

Ref No.	Parameter	3.0 ± 0.3 V		Unit
		Minimum	Maximum	
1	$\overline{\text{SPI_RDY}}$ to $\overline{\text{SS}}$ output low	2T[1]	–	ns
2	$\overline{\text{SS}}$ output low to first SCLK edge	3 • Tsclk[2]	–	ns
3	Last SCLK edge to $\overline{\text{SS}}$ output high	2 • Tsclk	–	ns
4	$\overline{\text{SS}}$ output high to $\overline{\text{SPI_RDY}}$ low	0	–	ns
5	$\overline{\text{SS}}$ output pulse width	Tsclk + WAIT [3]	–	ns
6	$\overline{\text{SS}}$ input low to first SCLK edge	T	–	ns
7	$\overline{\text{SS}}$ input pulse width	T	–	ns

1 T = CSPI system clock period (PERCLK2).

2 Tsclk = Period of SCLK.

3 WAIT = Number of bit clocks (SCLK) or 32.768 kHz clocks per Sample Period Control Register.

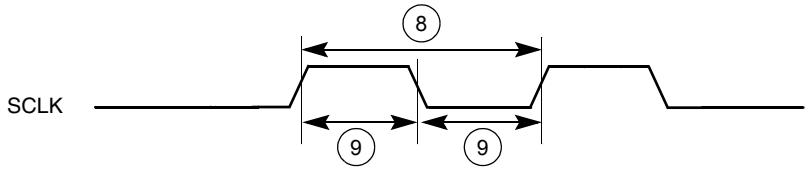

Figure 44. SPI SCLK Timing Diagram

Table 25. Timing Parameter Table for SPI SCLK

Ref No.	Parameter	3.0 ± 0.3 V		Unit
		Minimum	Maximum	
8	SCLK frequency	0	10	MHz
9	SCLK pulse width	100	–	ns

4.9 LCD Controller

This section includes timing diagrams for the LCD controller. For detailed timing diagrams of the LCD controller with various display configurations, refer to the LCD controller chapter of the *MC9328MX1 Reference Manual*.

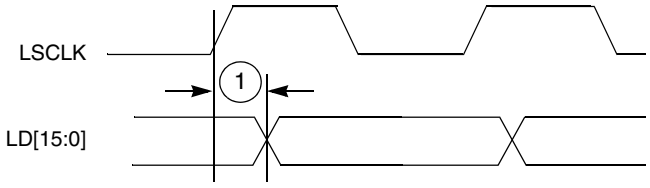

Figure 45. SCLK to LD Timing Diagram

Table 26. LCDC SCLK Timing Parameter Table

Ref No.	Parameter	3.0 ± 0.3 V		Unit
		Minimum	Maximum	
1	SCLK to LD valid	–	2	ns

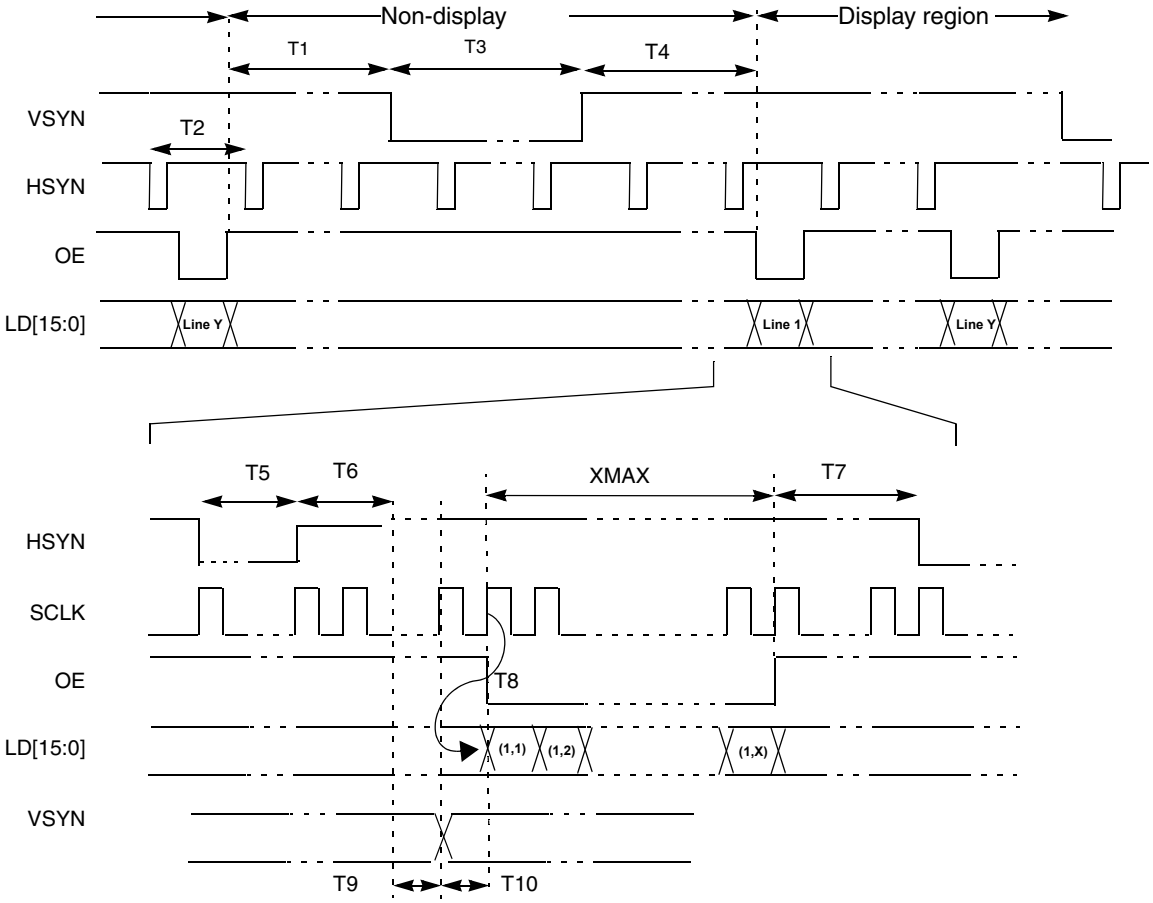

Figure 46. 4/8/16 Bit/Pixel TFT Color Mode Panel Timing

Table 27. 4/8/16 Bit/Pixel TFT Color Mode Panel Timing

Symbol	Description	Minimum	Corresponding Register Value	Unit
T1	End of OE to beginning of VSYN	T5+T6 +T7+T9	(VWAIT1·T2)+T5+T6+T7+T9	Ts
T2	HSYN period	XMAX+5	XMAX+T5+T6+T7+T9+T10	Ts
T3	VSYN pulse width	T2	VWIDTH·(T2)	Ts
T4	End of VSYN to beginning of OE	2	VWAIT2·(T2)	Ts
T5	HSYN pulse width	1	HWIDTH+1	Ts
T6	End of HSYN to beginning to T9	1	HWAIT2+1	Ts
T7	End of OE to beginning of HSYN	1	HWAIT1+1	Ts

Table 27. 4/8/16 Bit/Pixel TFT Color Mode Panel Timing (Continued)

Symbol	Description	Minimum	Corresponding Register Value	Unit
T8	SCLK to valid LD data	-3	3	ns
T9	End of HSYN idle2 to VSYN edge (for non-display region)	2	2	Ts
T9	End of HSYN idle2 to VSYN edge (for Display region)	1	1	Ts
T10	VSYN to OE active (Sharp = 0) when VWAIT2 = 0	1	1	Ts
T10	VSYN to OE active (Sharp = 1) when VWAIT2 = 0	2	2	Ts

Note:

- Ts is the SCLK period which equals LCDC_CLK / (PCD + 1). Normally LCDC_CLK = 15ns.
- VSYN, HSYN and OE can be programmed as active high or active low. In Figure 46, all 3 signals are active low.
- The polarity of SCLK and LD[15:0] can also be programmed.
- SCLK can be programmed to be deactivated during the VSYN pulse or the OE deasserted period. In Figure 46, SCLK is always active.
- For T9 non-display region, VSYN is non-active. It is used as an reference.
- XMAX is defined in pixels.

4.10 Multimedia Card/Secure Digital Host Controller

The DMA interface block controls all data routing between the external data bus (DMA access), internal MMC/SD module data bus, and internal system FIFO access through a dedicated state machine that monitors the status of FIFO content (empty or full), FIFO address, and byte/block counters for the MMC/SD module (inner system) and the application (user programming).

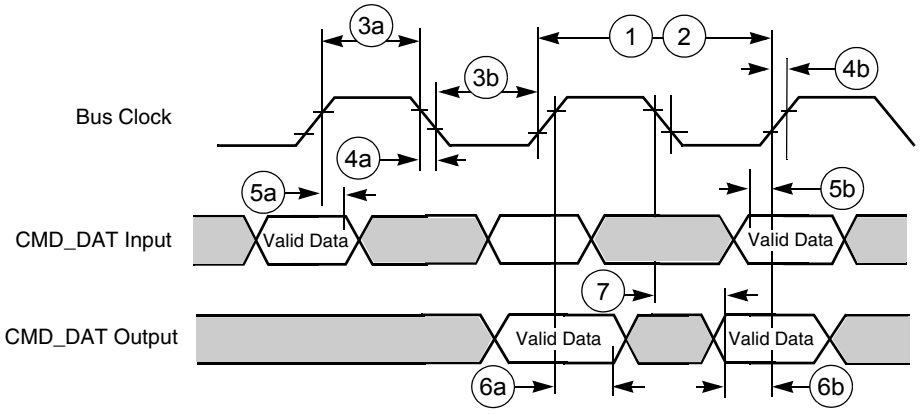

Figure 47. Chip-Select Read Cycle Timing Diagram

Table 28. SDHC Bus Timing Parameter Table

Ref No.	Parameter	1.8 ± 0.1 V		3.0 ± 0.3 V		Unit
		Minimum	Maximum	Minimum	Maximum	
1	CLK frequency at Data transfer Mode (PP)[1]—10/30 cards	0	25/5	0	25/5	MHz
2	CLK frequency at Identification Mode[2]	0	400	0	400	kHz
3a	Clock high time[1]—10/30 cards	6/33	–	10/50	–	ns
3b	Clock low time[1]—10/30 cards	15/75	–	10/50	–	ns
4a	Clock fall time[1]—10/30 cards	–	10/50 (5.00)[3]	–	10/50	ns
4b	Clock rise time[1]—10/30 cards	–	14/67 (6.67)[3]	–	10/50	ns
5a	Input hold time[3]—10/30 cards	10.3/10.3	–	9/9	–	ns
5b	Input setup time[3]—10/30 cards	10.3/10.3	–	9/9	–	ns
6a	Output hold time[3]—10/30 cards	5.7/5.7	–	5/5	–	ns
6b	Output setup time[3]—10/30 cards	5.7/5.7	–	5/5	–	ns
7	Output delay time[3]	0	16	0	14	ns

1 $C_L \leq 100$ pF / 250 pF (10/30 cards)
2 $C_L \leq 250$ pF (21 cards)
3 $C_L \leq 25$ pF (1 card)

4.10.1 Command Response Timing on MMC/SD Bus

The card identification and card operation conditions timing are processed in open-drain mode. The card response to the host command starts after exactly N_{ID} clock cycles. For the card address assignment, SET_RCA is also processed in the open-drain mode. The minimum delay between the host command and card response is NCR clock cycles as illustrated in Figure 48. The symbols for Figure 48 through Figure 52 are defined in Table 29.

Table 29. State Signal Parameters for Figure 48 through Figure 52

Card Active		Host Active	
Symbol	Definition	Symbol	Definition
Z	High impedance state	S	Start bit (0)
D	Data bits	T	Transmitter bit (Host = 1, Card = 0)
*	Repetition	P	One-cycle pull-up (1)
CRC	Cyclic redundancy check bits (7 bits)	E	End bit (1)

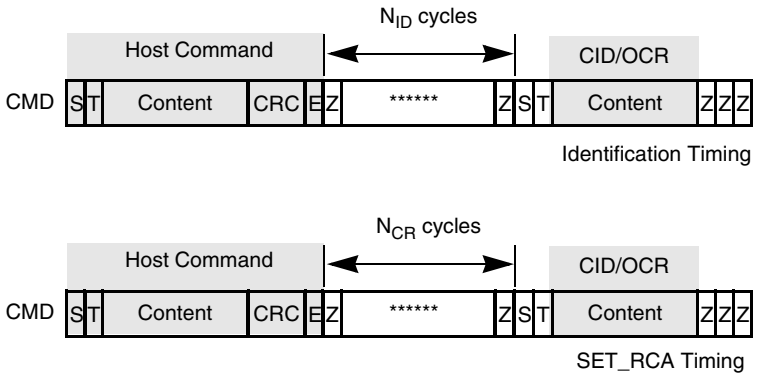

Figure 48. Timing Diagrams at Identification Mode

After a card receives its RCA, it switches to data transfer mode. As shown on the first diagram in Figure 49, SD_CMD lines in this mode are driven with push-pull drivers. The command is followed by a period of two Z bits (allowing time for direction switching on the bus) and then by P bits pushed up by the responding card. The other two diagrams show the separating periods N_{RC} and N_{CC}.

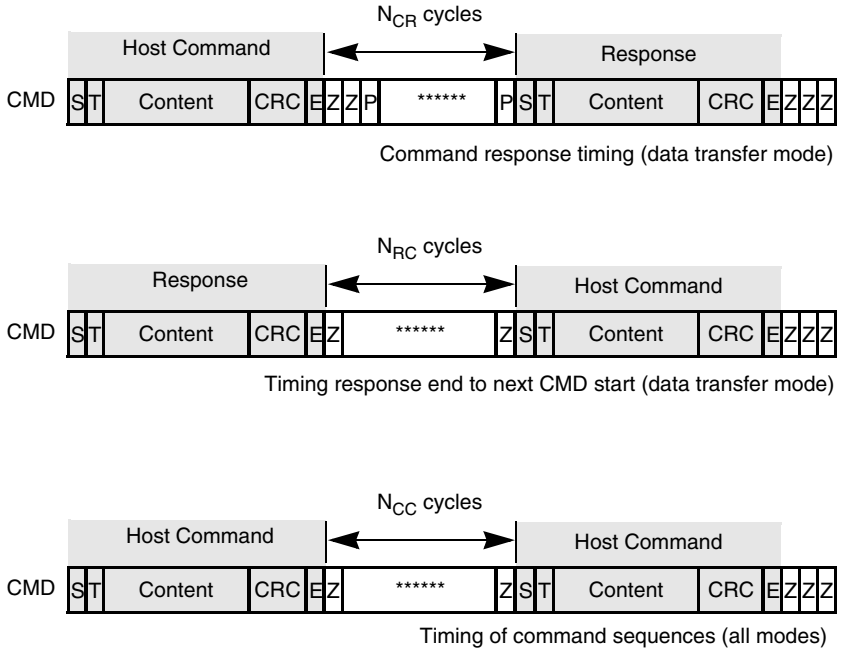

Figure 49. Timing Diagrams at Data Transfer Mode

Figure 50 shows basic read operation timing. In a read operation, the sequence starts with a single block read command (which specifies the start address in the argument field). The response is sent on the SD_CMD lines as usual. Data transmission from the card starts after the access time delay N_{AC}, beginning from the last bit of the read command. If the system is in multiple block read mode, the card sends a continuous flow of data blocks with distance N_{AC} until the card sees a stop transmission command. The data stops two clock cycles after the end bit of the stop command.

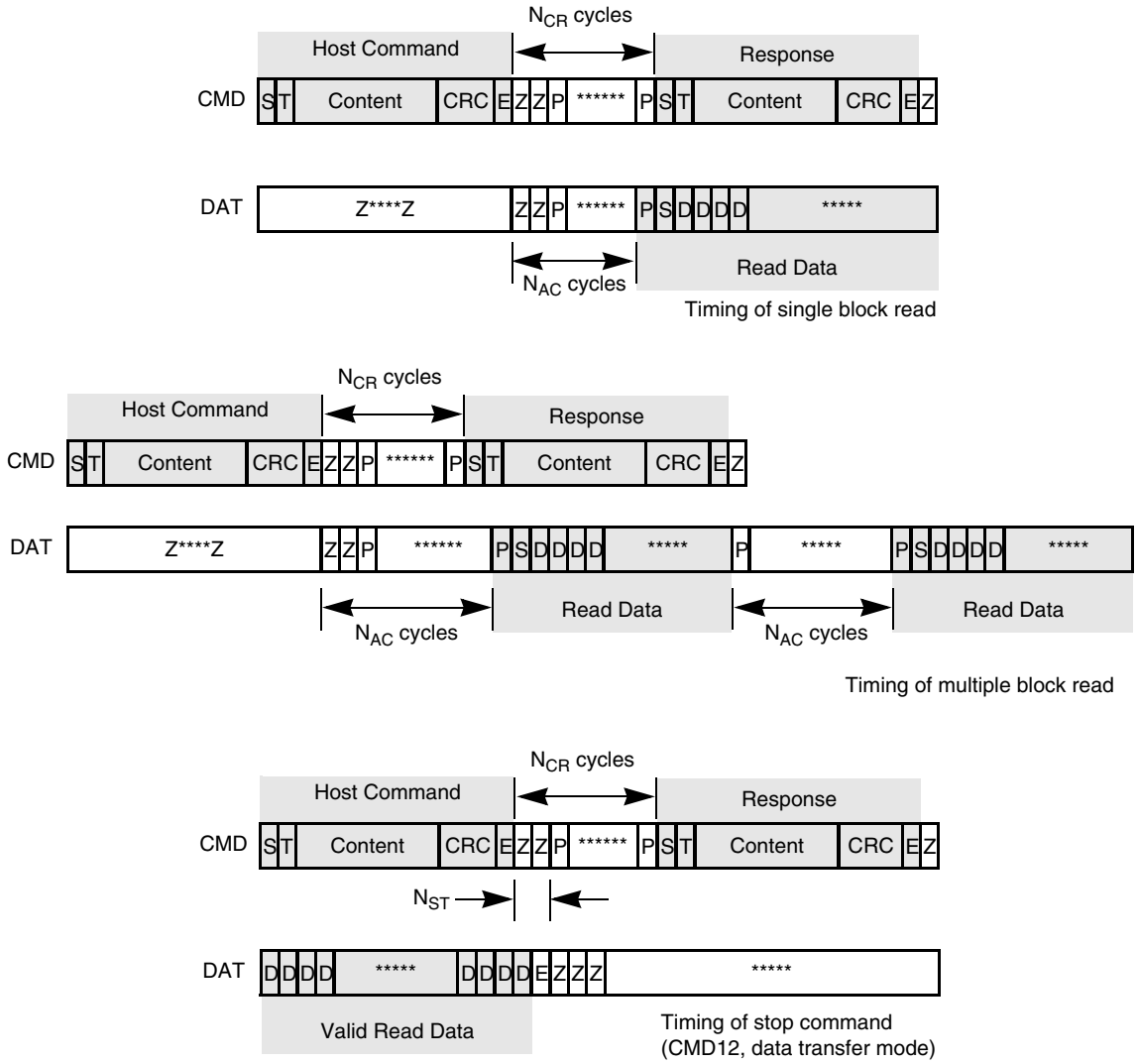

Figure 50. Timing Diagrams at Data Read

Figure 51 shows the basic write operation timing. As with the read operation, after the card response, the data transfer starts after N_{WR} cycles. The data is suffixed with CRC check bits to allow the card to check for transmission errors. The card sends back the CRC check result as a CC status token on the data line. If there was a transmission error, the card sends a negative CRC status (101); otherwise, a positive CRC status (010) is returned. The card expects a continuous flow of data blocks if it is configured to multiple block mode, with the flow terminated by a stop transmission command.

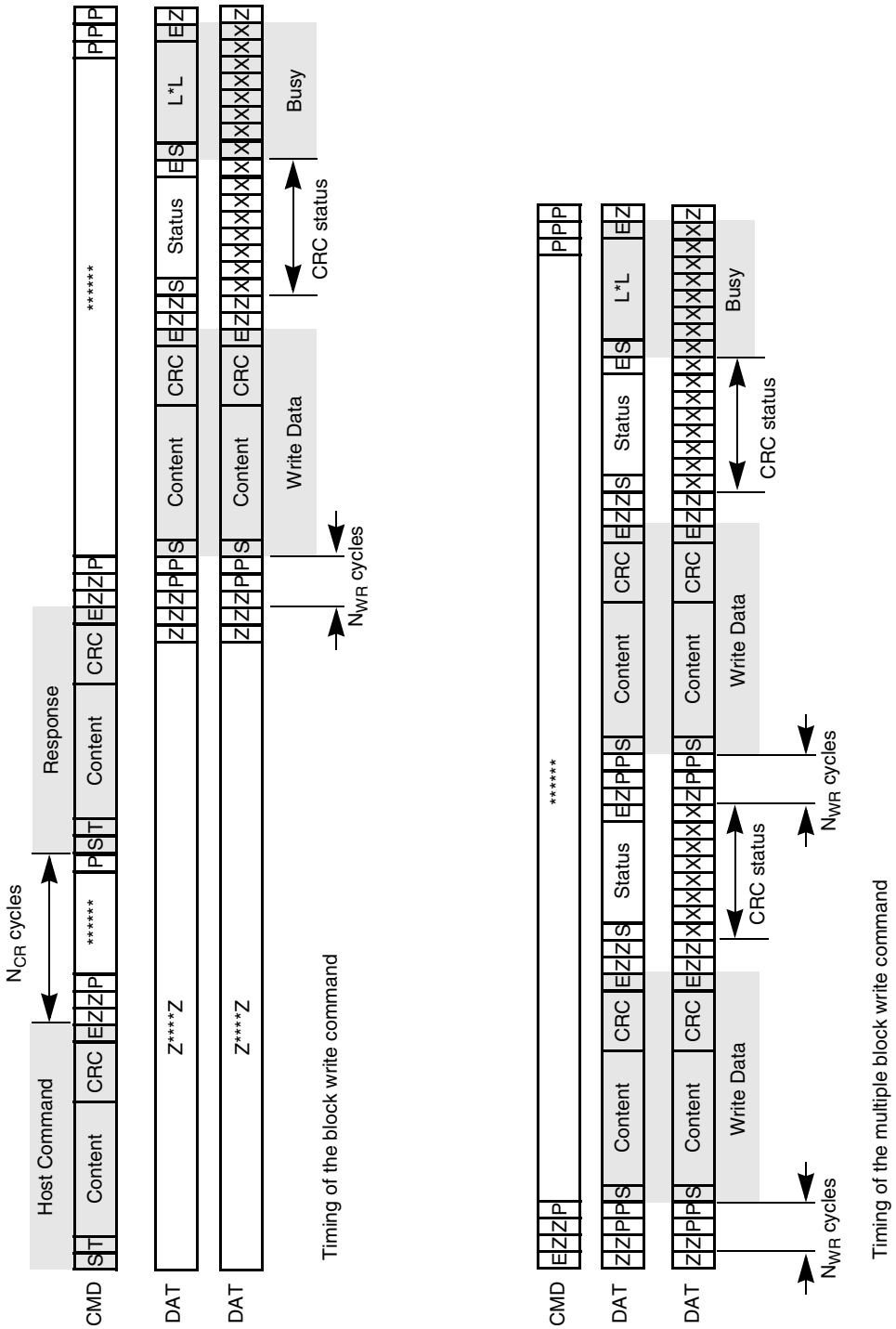

Figure 51. Timing Diagrams at Data Write

The stop transmission command may occur when the card is in different states. Figure 52 shows the different scenarios on the bus.

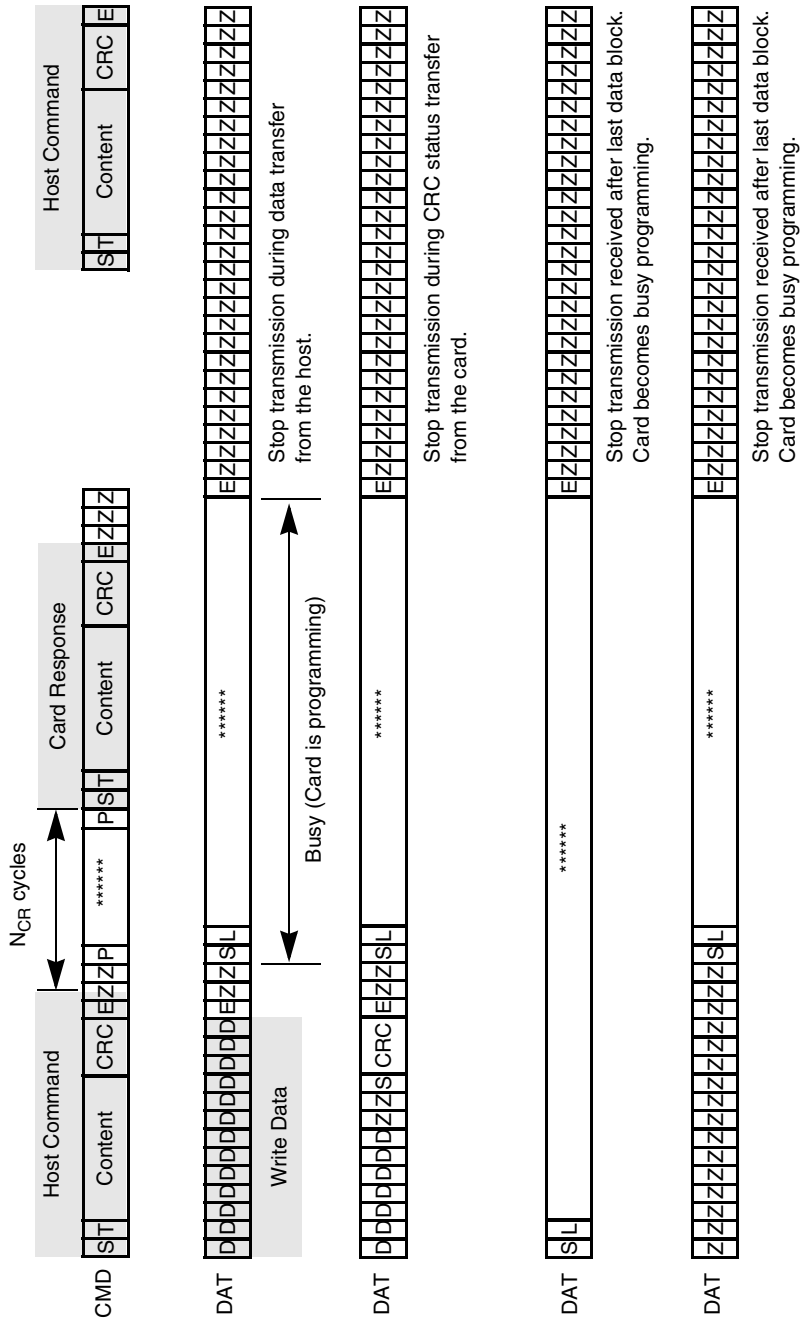

Figure 52. Stop Transmission During Different Scenarios

Table 30. Timing Values for Figure 48 through Figure 52

Parameter	Symbol	Minimum	Maximum	Unit
MMC/SD bus clock, CLK (All values are referred to minimum (VIH) and maximum (VIL)				
Command response cycle	NCR	2	64	Clock cycles
Identification response cycle	NID	5	5	Clock cycles
Access time delay cycle	NAC	2	TAAC + NSAC	Clock cycles

Table 30. Timing Values for Figure 48 through Figure 52 (Continued)

Parameter	Symbol	Minimum	Maximum	Unit
Command read cycle	NRC	8	–	Clock cycles
Command-command cycle	NCC	8	–	Clock cycles
Command write cycle	NWR	2	–	Clock cycles
Stop transmission cycle	NST	2	2	Clock cycles
TAAC: Data read access time -1 defined in CSD register bit[119:112] NSAC: Data read access time -2 in CLK cycles (NSAC·100) defined in CSD register bit[111:104]				

4.10.2 SDIO-IRQ and ReadWait Service Handling

In SDIO, there is a 1-bit or 4-bit interrupt response from the SDIO peripheral card. In 1-bit mode, the interrupt response is simply that the SD_DAT[1] line is held low. The SD_DAT[1] line is not used as data in this mode. The memory controller generates an interrupt according to this low and the system interrupt continues until the source is removed (SD_DAT[1] returns to its high level).

In 4-bit mode, the interrupt is less simple. The interrupt triggers at a particular period called the “Interrupt Period” during the data access, and the controller must sample SD_DAT[1] during this short period to determine the IRQ status of the attached card. The interrupt period only happens at the boundary of each block (512 bytes).

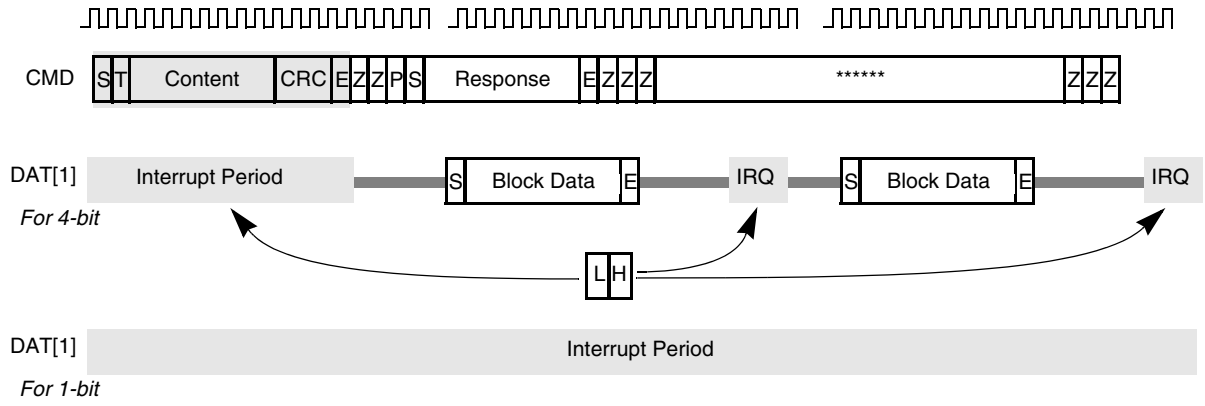

Figure 53. SDIO IRQ Timing Diagram

ReadWait is another feature in SDIO that allows the user to submit commands during the data transfer. In this mode, the block temporarily pauses the data transfer operation counter and related status, yet keeps the clock running, and allows the user to submit commands as normal. After all commands are submitted, the user can switch back to the data transfer operation and all counter and status values are resumed as access continues.

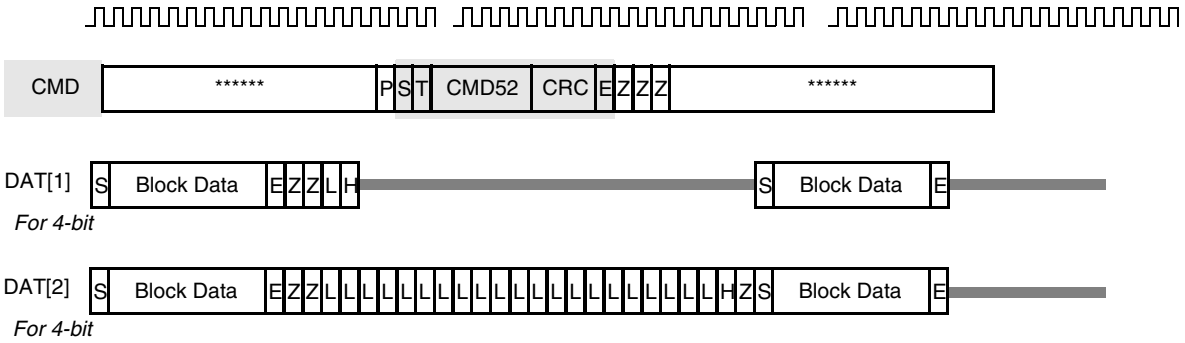

Figure 54. SDIO ReadWait Timing Diagram

4.11 Memory Stick Host Controller

The Memory Stick protocol requires three interface signal line connections for data transfers: MS_BS, MS_SDIO, and MS_SCLKO. Communication is always initiated by the MSHC and operates the bus in either four-state or two-state access mode.

The MS_BS signal classifies data on the SDIO into one of four states (BS0, BS1, BS2, or BS3) according to its attribute and transfer direction. BS0 is the INT transfer state, and during this state no packet transmissions occur. During the BS1, BS2, and BS3 states, packet communications are executed. The BS1, BS2, and BS3 states are regarded as one packet length and one communication transfer is always completed within one packet length (in four-state access mode).

The Memory Stick usually operates in four state access mode and in BS1, BS2, and BS3 bus states. When an error occurs during packet communication, the mode is shifted to two-state access mode, and the BS0 and BS1 bus states are automatically repeated to avoid a bus collision on the SDIO.

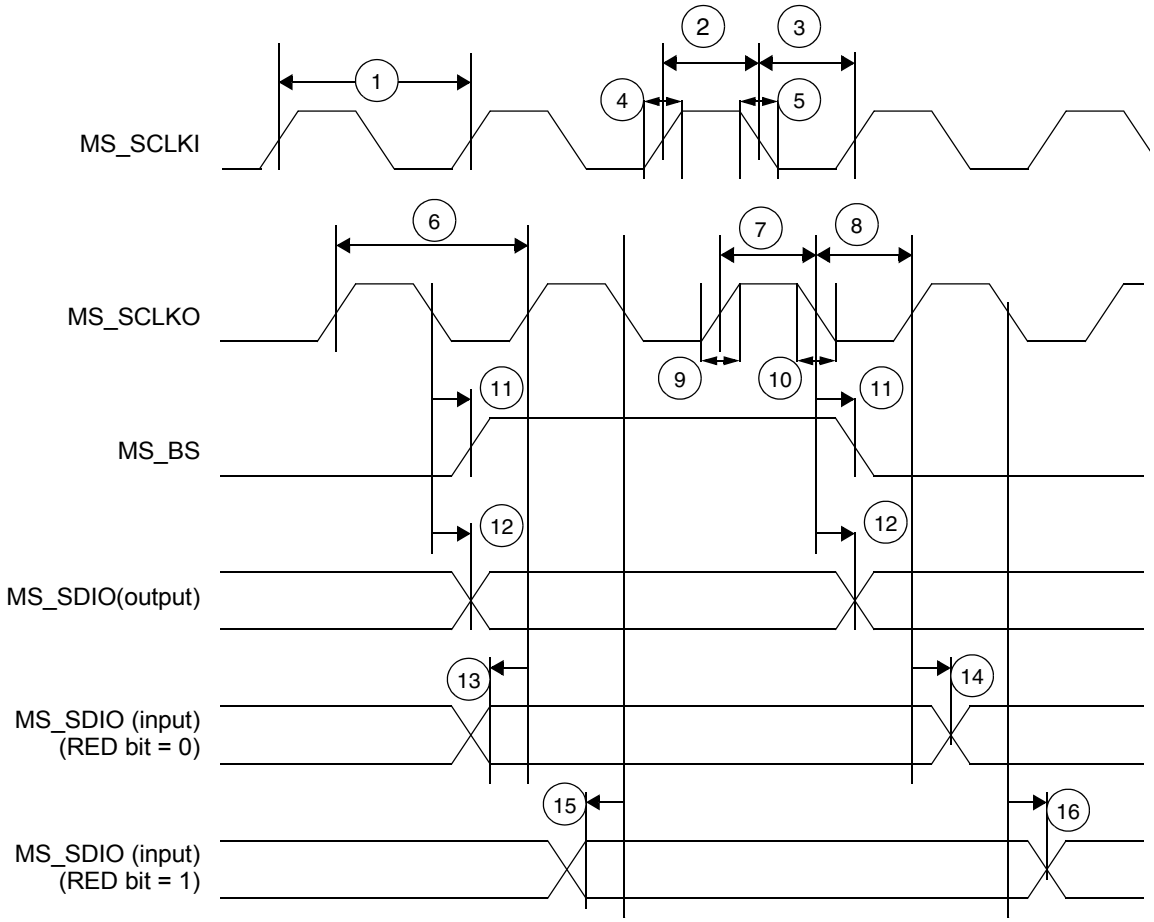

Figure 55. MSHC Signal Timing Diagram

Table 31. MSHC Signal Timing Parameter Table

Ref No.	Parameter	3.0 ± 0.3 V		Unit
		Minimum	Maximum	
1	MS_SCLKI frequency	–	25	MHz
2	MS_SCLKI high pulse width	20	–	ns
3	MS_SCLKI low pulse width	20	–	ns
4	MS_SCLKI rise time	–	3	ns
5	MS_SCLKI fall time	–	3	ns
6	MS_SCLKO frequency[1]	–	25	MHz
7	MS_SCLKO high pulse width[1]	20	–	ns
8	MS_SCLKO low pulse width[1]	15	–	ns
9	MS_SCLKO rise time[1]	–	5	ns
10	MS_SCLKO fall time[1]	–	5	ns
11	MS_BS delay time[1]	–	3	ns

Table 31. MSHC Signal Timing Parameter Table (Continued)

Ref No.	Parameter	3.0 ± 0.3 V		Unit
		Minimum	Maximum	
12	MS_SDIO output delay time[1,2]	–	3	ns
13	MS_SDIO input setup time for MS_SCLKO rising edge (RED bit = 0)[3]	18	–	ns
14	MS_SDIO input hold time for MS_SCLKO rising edge (RED bit = 0)[3]	0	–	ns
15	MS_SDIO input setup time for MS_SCLKO falling edge (RED bit = 1)[4]	23	–	ns
16	MS_SDIO input hold time for MS_SCLKO falling edge (RED bit = 1)[4]	0	–	ns

1 Loading capacitor condition is less than or equal to 30pF.

2 An external resistor (100 ~ 200 ohm) should be inserted in series to provide current control on the MS_SDIO pin, because of a possibility of signal conflict between the MS_SDIO pin and Memory Stick SDIO pin when the pin direction changes.

3 If the MSC2[RED] bit = 0, MSHC samples MS_SDIO input data at MS_SCLKO rising edge.

4 If the MSC2[RED] bit = 1, MSHC samples MS_SDIO input data at MS_SCLKO falling edge.

4.12 Pulse-Width Modulator

The PWM can be programmed to select one of two clock signals as its source frequency. The selected clock signal is passed through a divider and a prescaler before being input to the counter. The output is available at the pulse-width modulator output (PWMO) external pin. Its timing diagram is shown in Figure 56 and the parameters are listed in Table 32.

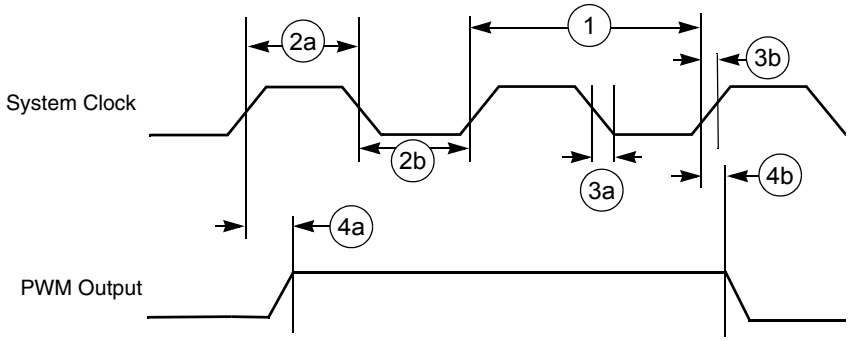

Figure 56. PWM Output Timing Diagram

Table 32. PWM Output Timing Parameter Table

Ref No.	Parameter	1.8 ± 0.1 V		3.0 ± 0.3 V		Unit
		Minimum	Maximum	Minimum	Maximum	
1	System CLK frequency[1]	0	87	0	100	MHz
2a	Clock high time[1]	3.3	–	5/10	–	ns
2b	Clock low time[1]	7.5	–	5/10	–	ns
3a	Clock fall time[1]	–	5	–	5/10	ns

Table 32. PWM Output Timing Parameter Table (Continued)

Ref No.	Parameter	1.8 ± 0.1 V		3.0 ± 0.3 V		Unit
		Minimum	Maximum	Minimum	Maximum	
3b	Clock rise time[1]	–	6.67	–	5/10	ns
4a	Output delay time[1]	5.7	–	5	–	ns
4b	Output setup time[1]	5.7	–	5	–	ns

[1] C_L of PWMO = 30 pF

4.13 SDRAM Controller

This section shows timing diagrams and parameters associated with the SDRAM (synchronous dynamic random access memory) Controller.

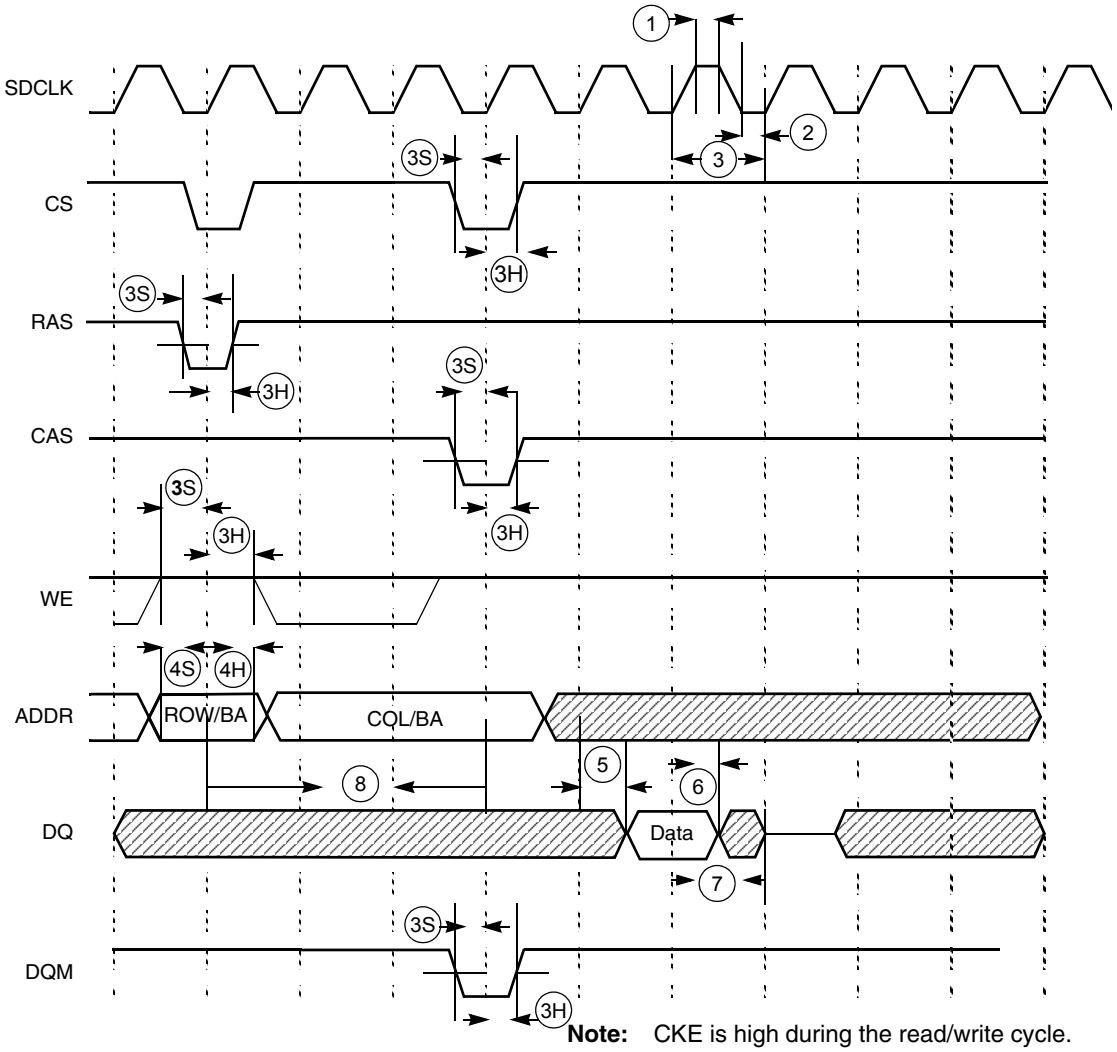

Note: CKE is high during the read/write cycle.

Figure 57. SDRAM Read Cycle Timing Diagram

Table 33. SDRAM Read Timing Parameter Table

Ref No.	Parameter	1.8 ± 0.1 V		3.0 ± 0.3 V		Unit
		Minimum	Maximum	Minimum	Maximum	
1	SDRAM clock high-level width	2.67	–	4	–	ns
2	$\overline{\text{SDRAM clock low-level width}}$	6	–	4	–	ns
3	SDRAM clock cycle time	11.4	–	10	–	ns
3S	CS, RAS, CAS, WE, DQM setup time	3.42	–	3	–	ns
3H	CS, RAS, CAS, WE, DQM hold time	2.28	–	2	–	ns
4S	Address setup time	3.42	–	3	–	ns
4H	Address hold time	2.28	–	2	–	ns
5	SDRAM access time (CL = 3)	–	6.84	–	6	ns
5	SDRAM access time (CL = 2)	–	6.84	–	6	ns
5	SDRAM access time (CL = 1)	–	22	–	22	ns
6	Data out hold time	2.85	–	2.5	–	ns
7	Data out high-impedance time (CL = 3)	–	6.84	–	6	ns
7	Data out high-impedance time (CL = 2)	–	6.84	–	6	ns
7	Data out high-impedance time (CL = 1)	–	22	–	22	ns
8	Active to read/write command period (RC = 1)	t_{RCD}[1]	–	t_{RCD1}	–	ns

[1] t_{RCD} = SDRAM clock cycle time. This settings can be found in the *MC9328MX1 reference manua*l.

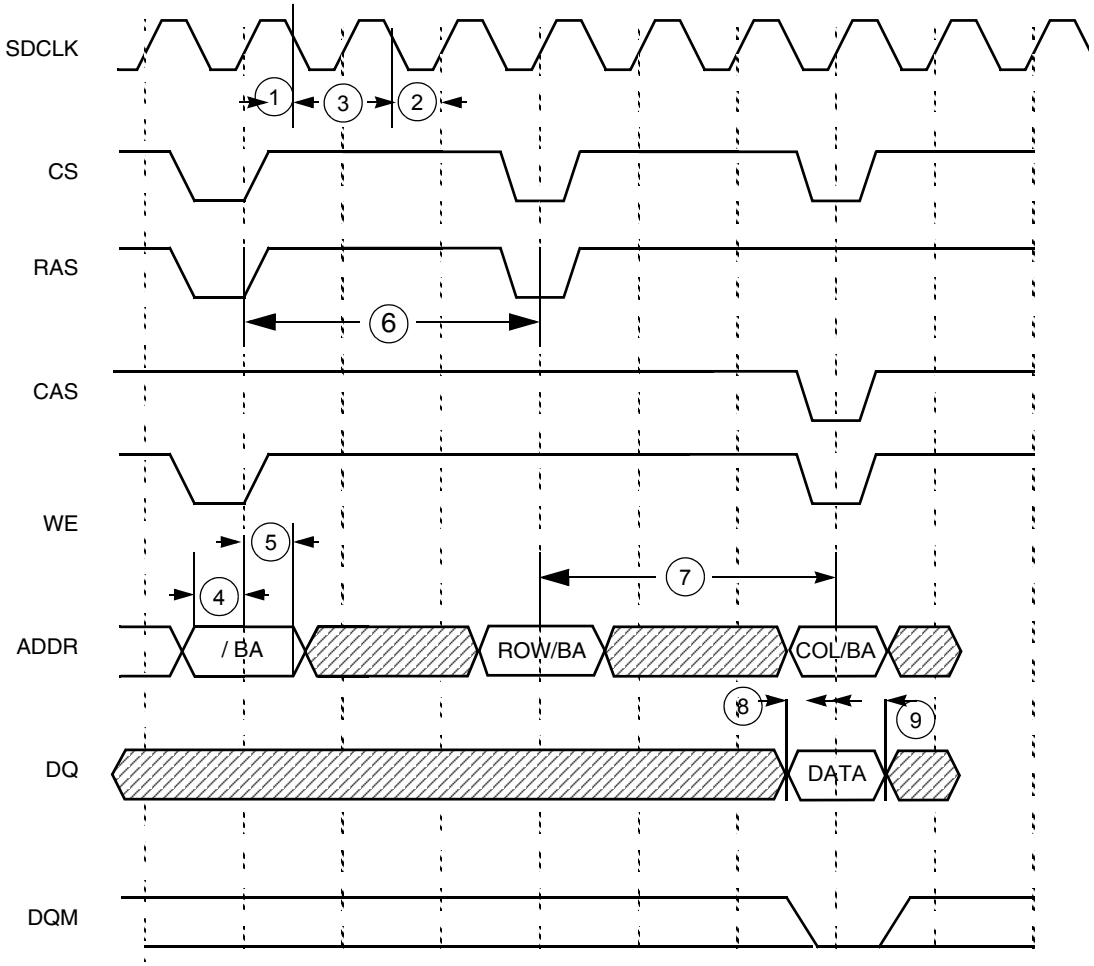

Figure 58. SDRAM Write Cycle Timing Diagram

Table 34. SDRAM Write Timing Parameter Table

Ref No.	Parameter	1.8 ± 0.1 V		3.0 ± 0.3 V		Unit
		Minimum	Maximum	Minimum	Maximum	
1	SDRAM clock high-level width	2.67	–	4	–	ns
2	SDRAM clock low-level width	6	–	4	–	ns
3	SDRAM clock cycle time	11.4	–	10	–	ns
4	Address setup time	3.42	–	3	–	ns
5	Address hold time	2.28	–	2	–	ns
6	Precharge cycle period[1]	t_{RP}[2]	–	t_{RP2}	–	ns
7	Active to read/write command delay	t_{RCD2}	–	t_{RCD2}	–	ns
8	Data setup time	4.0	–	2	–	ns
9	Data hold time	2.28	–	2	–	ns

[1] Precharge cycle timing is included in the write timing diagram.

[2] t_{RP} and t_{RCD} = SDRAM clock cycle time. These settings can be found in the *MC9328MX1 reference manual*.

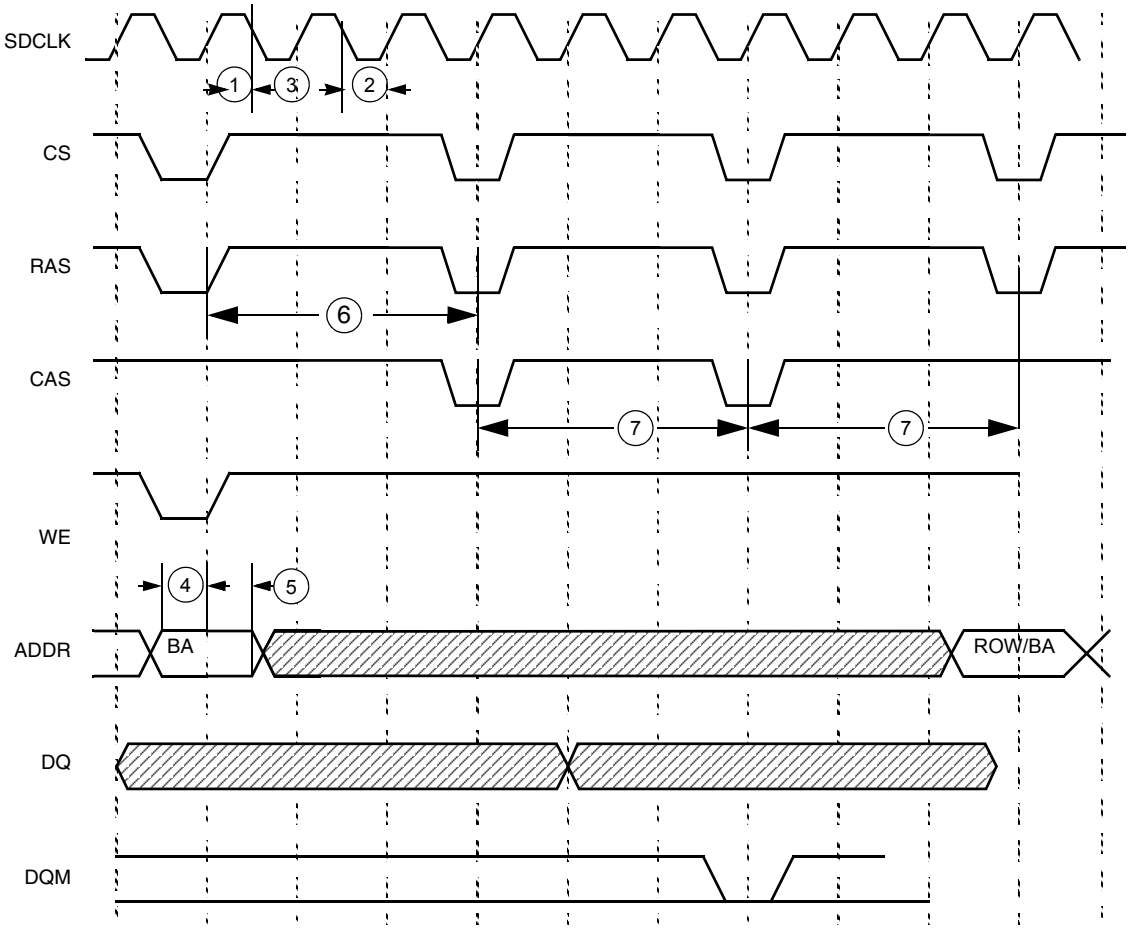

Figure 59. SDRAM Refresh Timing Diagram

Table 35. SDRAM Refresh Timing Parameter Table

Ref No.	Parameter	1.8 ± 0.1 V		3.0 ± 0.3 V		Unit
		Minimum	Maximum	Minimum	Maximum	
1	SDRAM clock high-level width	2.67	–	4	–	ns
2	SDRAM clock low-level width	6	–	4	–	ns
3	SDRAM clock cycle time	11.4	–	10	–	ns
4	Address setup time	3.42	–	3	–	ns
5	Address hold time	2.28	–	2	–	ns
6	Precharge cycle period	t_{RP}[1]	–	t_{RP1}	–	ns
7	Auto precharge command period	t_{RC1}	–	t_{RC1}	–	ns

[1] t_{RP} and t_{RC} = SDRAM clock cycle time. These settings can be found in the *MC9328MX1 reference manual*.

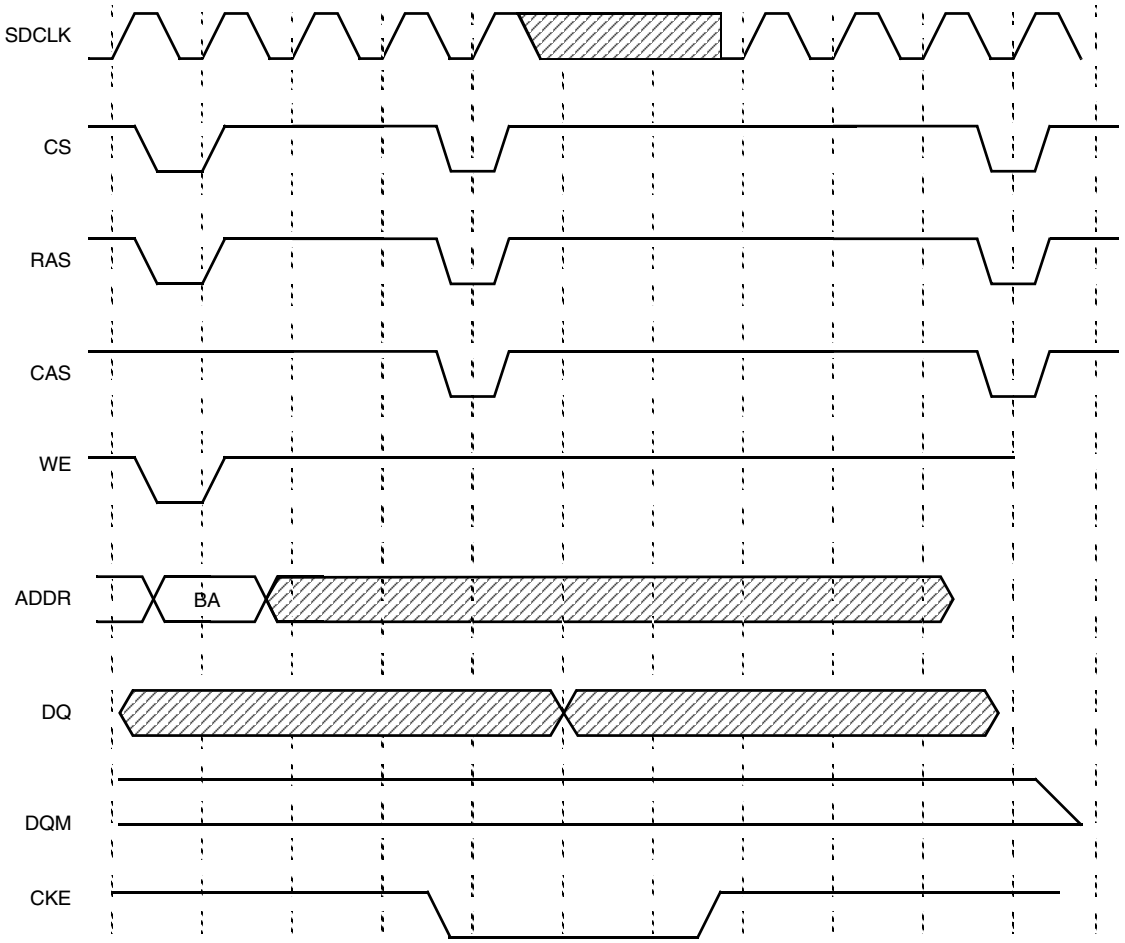

Figure 60. SDRAM Self-Refresh Cycle Timing Diagram

4.14 USB Device Port

Four types of data transfer modes exist for the USB module: control transfers, bulk transfers, isochronous transfers, and interrupt transfers. From the perspective of the USB module, the interrupt transfer type is identical to the bulk data transfer mode, and no additional hardware is supplied to support it. This section covers the transfer modes and how they work from the ground up.

Data moves across the USB in packets. Groups of packets are combined to form data transfers. The same packet transfer mechanism applies to bulk, interrupt, and control transfers. Isochronous data is also moved in the form of packets, however, because isochronous pipes are given a fixed portion of the USB bandwidth at all times, there is no end-of-transfer.

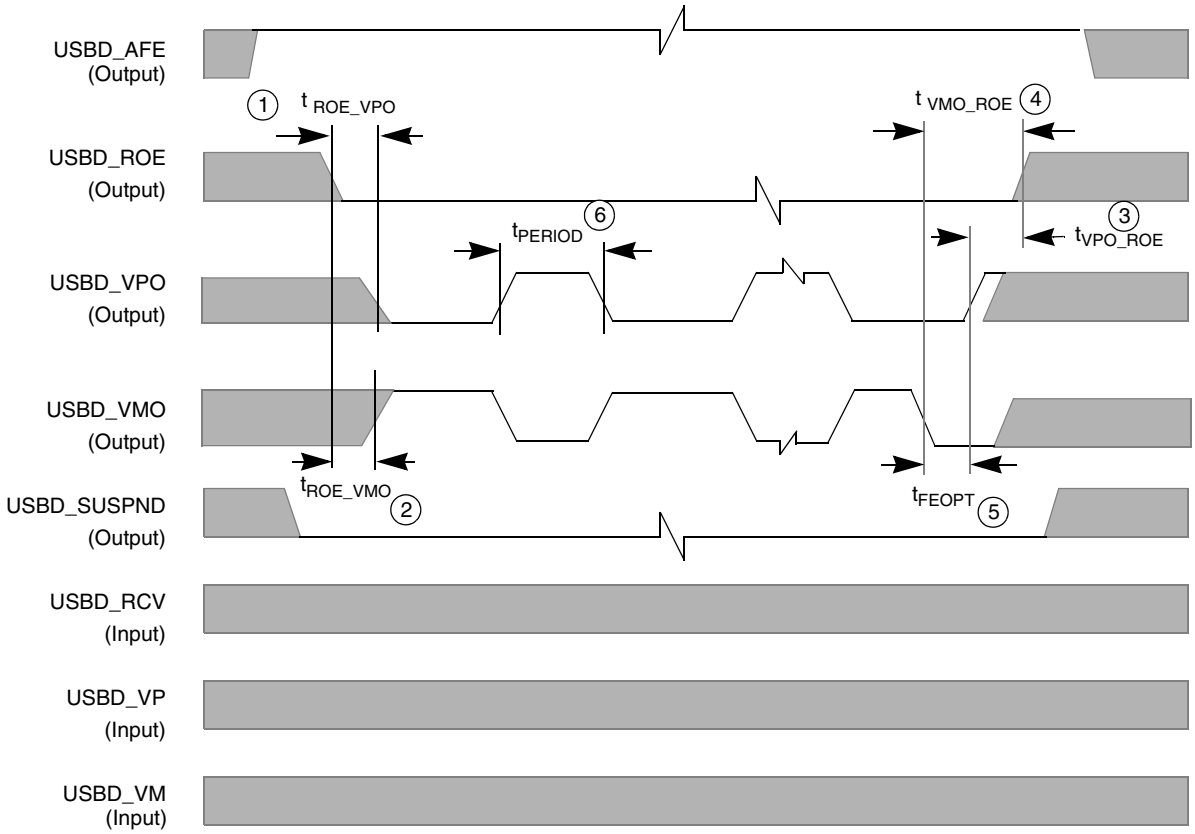

Figure 61. USB Device Timing Diagram for Data Transfer to USB Transceiver (TX)

Table 36. USB Device Timing Parameters for Data Transfer to USB Transceiver (TX)

Ref No.	Parameter	3.0 ± 0.3 V		Unit
		Minimum	Maximum	
1	t_{ROE_VPO}; USBD_ROE active to USBD_VPO low	83.14	83.47	ns
2	t_{ROE_VMO}; USBD_ROE active to USBD_VMO high	81.55	81.98	ns
3	t_{VPO_ROE}; USBD_VPO high to USBD_ROE deactivated	83.54	83.80	ns
4	t_{VMO_ROE}; USBD_VMO low to USBD_ROE deactivated (includes SE0)	248.90	249.13	ns
5	t_{FEOPT}; SE0 interval of EOP	160.00	175.00	ns
6	t_{PERIOD}; Data transfer rate	11.97	12.03	Mb/s

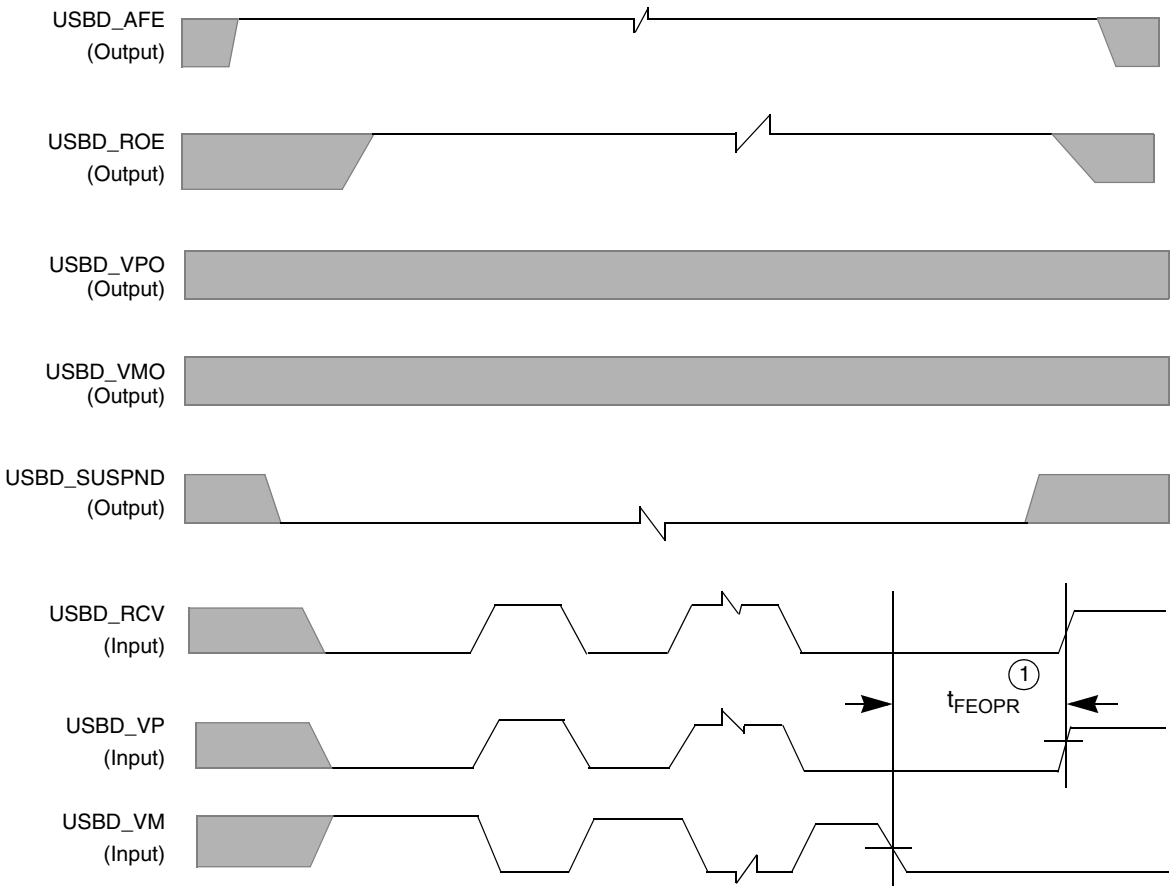

Figure 62. USB Device Timing Diagram for Data Transfer from USB Transceiver (RX)

Table 37. USB Device Timing Parameter Table for Data Transfer from USB Transceiver (RX)

Ref No.	Parameter	3.0 ± 0.3 V		Unit
		Minimum	Maximum	
1	t_{FEOPR}; Receiver SE0 interval of EOP	82	–	ns

4.15 I²C Module

The I²C communication protocol consists of seven elements: START, Data Source/Recipient, Data Direction, Slave Acknowledge, Data, Data Acknowledge, and STOP.

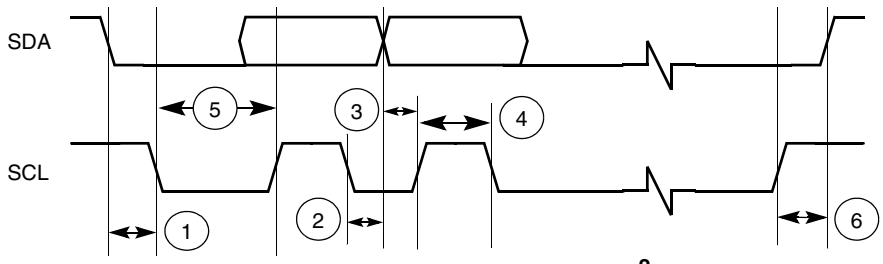

Figure 63. Definition of Bus Timing for I²C

Table 38. I^2C Bus Timing Parameter Table

Ref No.	Parameter	1.8 ± 0.1 V		3.0 ± 0.3 V		Unit
		Minimum	Maximum	Minimum	Maximum	
1	Hold time (repeated) START condition	182	–	160	–	ns
2	Data hold time	0	171	0	150	ns
3	Data setup time	11.4	–	10	–	ns
4	HIGH period of the SCL clock	80	–	120	–	ns
5	LOW period of the SCL clock	480	–	320	–	ns
6	Setup time for STOP condition	182.4	–	160	–	ns

4.16 Synchronous Serial Interface

The transmit and receive sections of the SSI can be synchronous or asynchronous. In synchronous mode, the transmitter and the receiver use a common clock and frame synchronization signal. In asynchronous mode, the transmitter and receiver each have their own clock and frame synchronization signals. Continuous or gated clock mode can be selected. In continuous mode, the clock runs continuously. In gated clock mode, the clock functions only during transmission. The internal and external clock timing diagrams are shown in Figure 65 through Figure 67.

Normal or network mode can also be selected. In normal mode, the SSI functions with one data word of I/O per frame. In network mode, a frame can contain between 2 and 32 data words. Network mode is typically used in star or ring-time division multiplex networks with other processors or codecs, allowing interface to time division multiplexed networks without additional logic. Use of the gated clock is not allowed in network mode. These distinctions result in the basic operating modes that allow the SSI to communicate with a wide variety of devices.

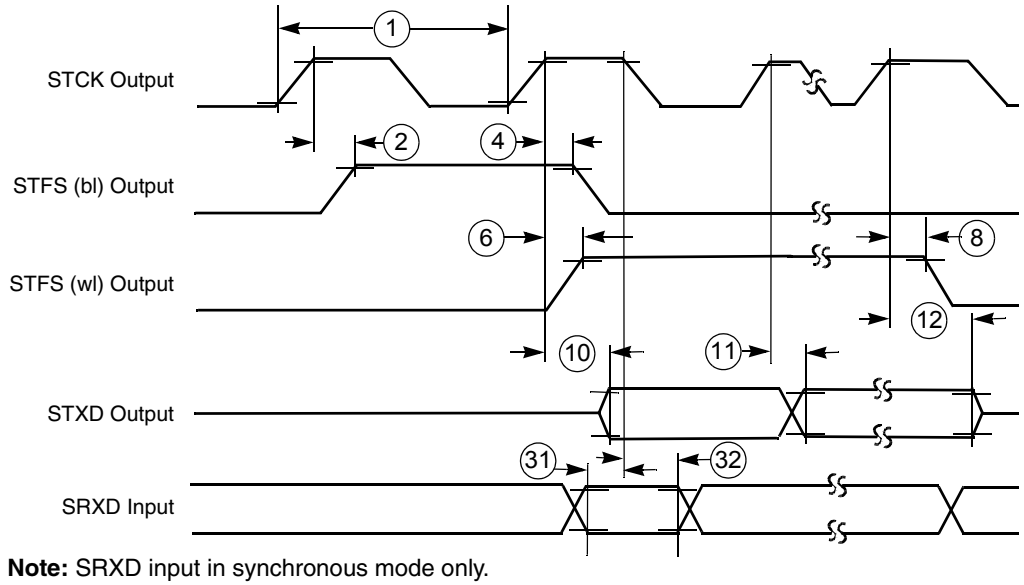

Note: SRXD input in synchronous mode only.

Figure 64. SSI Transmitter Internal Clock Timing Diagram

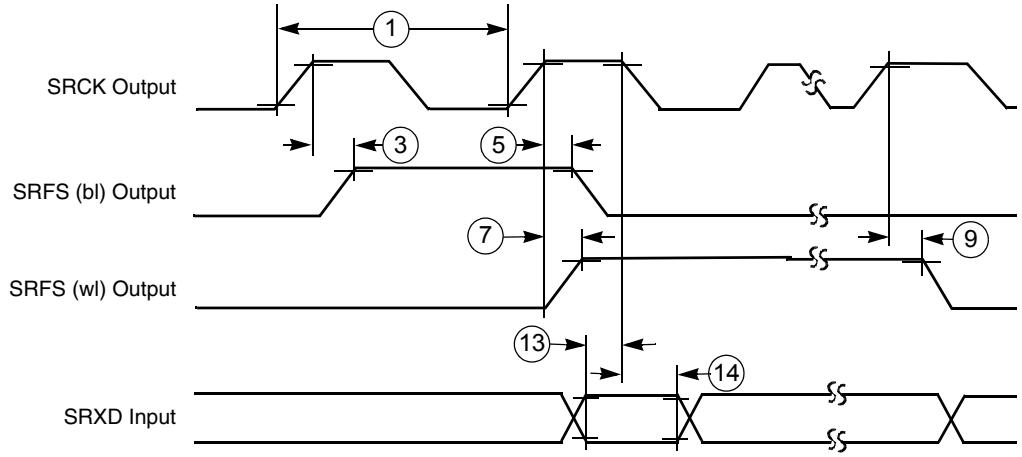

Figure 65. SSI Receiver Internal Clock Timing Diagram

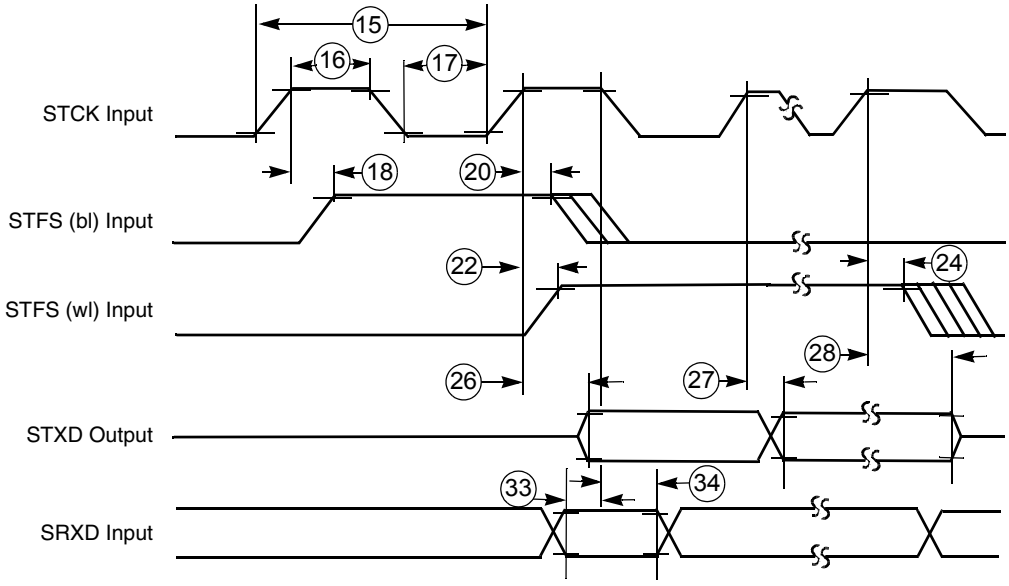

Note: SRXD Input in Synchronous mode only

Figure 66. SSI Transmitter External Clock Timing Diagram

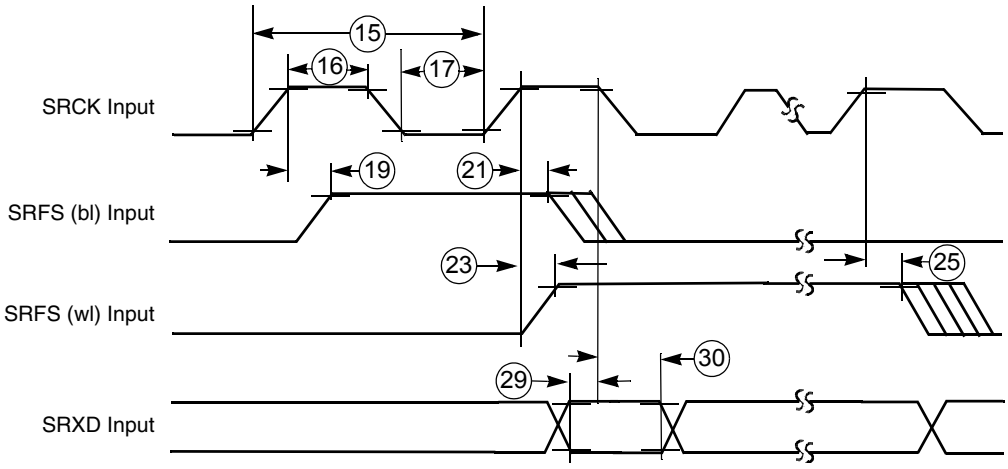

Figure 67. SSI Receiver External Clock Timing Diagram

Table 39. SSI (Port C Primary Function) Timing Parameter Table

Ref No.	Parameter	1.8 ± 0.1 V		3.0 ± 0.3 V		Unit
		Minimum	Maximum	Minimum	Maximum	
Internal Clock Operation[1] (Port C Primary Function[2])						
1	STCK/SRCK clock period[1]	95	–	83.3	–	ns
2	STCK high to STFS (bl) high[3]	1.5	4.5	1.3	3.9	ns
3	SRCK high to SRFS (bl) high[3]	-1.2	-1.7	-1.1	-1.5	ns
4	STCK high to STFS (bl) low[3]	2.5	4.3	2.2	3.8	ns
5	SRCK high to SRFS (bl) low[3]	0.1	-0.8	0.1	-0.8	ns
6	STCK high to STFS (wl) high[3]	1.48	4.45	1.3	3.9	ns
7	SRCK high to SRFS (wl) high[3]	-1.1	-1.5	-1.1	-1.5	ns
8	STCK high to STFS (wl) low[3]	2.51	4.33	2.2	3.8	ns
9	SRCK high to SRFS (wl) low[3]	0.1	-0.8	0.1	-0.8	ns
10	STCK high to STXD valid from high impedance	14.25	15.73	12.5	13.8	ns
11a	STCK high to STXD high	0.91	3.08	0.8	2.7	ns
11b	STCK high to STXD low	0.57	3.19	0.5	2.8	ns
12	STCK high to STXD high impedance	12.88	13.57	11.3	11.9	ns
13	SRXD setup time before SRCK low	21.1	–	18.5	–	ns
14	SRXD hold time after SRCK low	0	–	0	–	ns
External Clock Operation (Port C Primary Function[2])						
15	STCK/SRCK clock period[1]	92.8	–	81.4	–	ns
16	STCK/SRCK clock high period	27.1	–	40.7	–	ns
17	STCK/SRCK clock low period	61.1	–	40.7	–	ns

Table 39. SSI (Port C Primary Function) Timing Parameter Table (Continued)

Ref No.	Parameter	1.8 ± 0.1 V		3.0 ± 0.3 V		Unit
		Minimum	Maximum	Minimum	Maximum	
18	STCK high to STFS (bl) high[3]	–	92.8	0	81.4	ns
19	SRCK high to SRFS (bl) high[3]	–	92.8	0	81.4	ns
20	STCK high to STFS (bl) low[3]	–	92.8	0	81.4	ns
21	SRCK high to SRFS (bl) low[3]	–	92.8	0	81.4	ns
22	STCK high to STFS (wl) high[3]	–	92.8	0	81.4	ns
23	SRCK high to SRFS (wl) high[3]	–	92.8	0	81.4	ns
24	STCK high to STFS (wl) low[3]	–	92.8	0	81.4	ns
25	SRCK high to SRFS (wl) low[3]	–	92.8	0	81.4	ns
26	STCK high to STXD valid from high impedance	18.01	28.16	15.8	24.7	ns
27a	STCK high to STXD high	8.98	18.13	7.0	15.9	ns
27b	STCK high to STXD low	9.12	18.24	8.0	16.0	ns
28	STCK high to STXD high impedance	18.47	28.5	16.2	25.0	ns
29	SRXD setup time before SRCK low	1.14	–	1.0	–	ns
30	SRXD hole time after SRCK low	0	–	0	–	ns
Synchronous Internal Clock Operation (Port C Primary Function[2])						
31	SRXD setup before STCK falling	15.4	–	13.5	–	ns
32	SRXD hold after STCK falling	0	–	0	–	ns
Synchronous External Clock Operation (Port C Primary Function[2])						
33	SRXD setup before STCK falling	1.14	–	1.0	–	ns
34	SRXD hold after STCK falling	0	–	0	–	ns

1 All the timings for the SSI are given for a non-inverted serial clock polarity (TSCKP/RSCKP = 0) and a non-inverted frame sync (TFSI/RFSI = 0). If the polarity of the clock and/or the frame sync have been inverted, all the timing remains valid by inverting the clock signal STCK/SRCK and/or the frame sync STFS/SRFS shown in the tables and in the figures.

2 There are 2 sets of I/O signals for the SSI module. They are from Port C primary function (pad 257 to pad 261) and Port B alternate function (pad 283 to pad 288). When SSI signals are configured as outputs, they can be viewed both at Port C primary function and Port B alternate function. When SSI signals are configured as input, the SSI module selects the input based on status of the FMCR register bits in the Clock controller module (CRM). By default, the input are selected from Port C primary function.

3 bl = bit length; wl = word length.

Table 40. SSI (Port B Alternate Function) Timing Parameter Table

Ref No.	Parameter	1.8 ± 0.1 V		3.0 ± 0.3 V		Unit
		Minimum	Maximum	Minimum	Maximum	
Internal Clock Operation[1] (Port B Alternate Function[2])						
1	STCK/SRCK clock period[1]	95	–	83.3	–	ns
2	STCK high to STFS (bl) high[3]	1.7	4.8	1.5	4.2	ns
3	SRCK high to SRFS (bl) high[3]	-0.1	1.0	-0.1	1.0	ns
4	STCK high to STFS (bl) low[3]	3.08	5.24	2.7	4.6	ns
5	SRCK high to SRFS (bl) low[3]	1.25	2.28	1.1	2.0	ns
6	STCK high to STFS (wl) high[3]	1.71	4.79	1.5	4.2	ns
7	SRCK high to SRFS (wl) high[3]	-0.1	1.0	-0.1	1.0	ns
8	STCK high to STFS (wl) low[3]	3.08	5.24	2.7	4.6	ns
9	SRCK high to SRFS (wl) low[3]	1.25	2.28	1.1	2.0	ns
10	STCK high to STXD valid from high impedance	14.93	16.19	13.1	14.2	ns
11a	STCK high to STXD high	1.25	3.42	1.1	3.0	ns
11b	STCK high to STXD low	2.51	3.99	2.2	3.5	ns
12	STCK high to STXD high impedance	12.43	14.59	10.9	12.8	ns
13	SRXD setup time before SRCK low	20	–	17.5	–	ns
14	SRXD hold time after SRCK low	0	–	0	–	ns
External Clock Operation (Port B Alternate Function[2])						
15	STCK/SRCK clock period[1]	92.8	–	81.4	–	ns
16	STCK/SRCK clock high period	27.1	–	40.7	–	ns
17	STCK/SRCK clock low period	61.1	–	40.7	–	ns
18	STCK high to STFS (bl) high[3]	–	92.8	0	81.4	ns
19	SRCK high to SRFS (bl) high[3]	–	92.8	0	81.4	ns
20	STCK high to STFS (bl) low[3]	–	92.8	0	81.4	ns
21	SRCK high to SRFS (bl) low[3]	–	92.8	0	81.4	ns
22	STCK high to STFS (wl) high[3]	–	92.8	0	81.4	ns
23	SRCK high to SRFS (wl) high[3]	–	92.8	0	81.4	ns
24	STCK high to STFS (wl) low[3]	–	92.8	0	81.4	ns
25	SRCK high to SRFS (wl) low[3]	–	92.8	0	81.4	ns
26	STCK high to STXD valid from high impedance	18.9	29.07	16.6	25.5	ns
27a	STCK high to STXD high	9.23	20.75	8.1	18.2	ns
27b	STCK high to STXD low	10.60	21.32	9.3	18.7	ns

Table 40. SSI (Port B Alternate Function) Timing Parameter Table (Continued)

Ref No.	Parameter	1.8 ± 0.1 V		3.0 ± 0.3 V		Unit
		Minimum	Maximum	Minimum	Maximum	
28	STCK high to STXD high impedance	17.90	29.75	15.7	26.1	ns
29	SRXD setup time before SRCK low	1.14	–	1.0	–	ns
30	SRXD hold time after SRCK low	0	–	0	–	ns
Synchronous Internal Clock Operation (Port B Alternate Function[2])						
31	SRXD setup before STCK falling	18.81	–	16.5	–	ns
32	SRXD hold after STCK falling	0	–	0	–	ns
Synchronous External Clock Operation (Port B Alternate Function[2])						
33	SRXD setup before STCK falling	1.14	–	1.0	–	ns
34	SRXD hold after STCK falling	0	–	0	–	ns

1 All the timings for the SSI are given for a non-inverted serial clock polarity (TSCKP/RSCKP = 0) and a non-inverted frame sync (TFSI/RFSI = 0). If the polarity of the clock and/or the frame sync have been inverted, all the timing remains valid by inverting the clock signal STCK/SRCK and/or the frame sync STFS/SRFS shown in the tables and in the figures.

2 There are 2 set of I/O signals for the SSI module. They are from Port C primary function (pad 257 to pad 261) and Port B alternate function (pad 283 to pad 288). When SSI signals are configured as outputs, they can be viewed both at Port C primary function and Port B alternate function. When SSI signals are configured as inputs, the SSI module selects the input based on FMCR register bits in the Clock controller module (CRM). By default, the input are selected from Port C primary function.

3 bl = bit length; wl = word length.

Table 41. SSI 2 (Port C Alternate Function) Timing Parameter Table

Ref No.	Parameter	1.8V +/- 0.10V		3.0V +/- 0.30V		Unit
		Minimum	Maximum	Minimum	Maximum	
Internal Clock Operation[1] (Port C Alternate Function)[2]						
1	STCK/SRCK clock period[1]	95	–	83.3	–	ns
2	STCK high to STFS (bl) high[3]	1.7	4.8	1.5	4.2	ns
3	SRCK high to SRFS (bl) high[3]	-0.1	1.0	-0.1	1.0	ns
4	STCK high to STFS (bl) low[3]	3.08	5.24	2.7	4.6	ns
5	SRCK high to SRFS (bl) low[3]	1.25	2.28	1.1	2.0	ns
6	STCK high to STFS (wl) high[3]	1.71	4.79	1.5	4.2	ns
7	SRCK high to SRFS (wl) high[3]	-0.1	1.0	-0.1	1.0	ns
8	STCK high to STFS (wl) low[3]	3.08	5.24	2.7	4.6	ns
9	SRCK high to SRFS (wl) low[3]	1.25	2.28	1.1	2.0	ns
10	STCK high to STXD valid from high impedance	14.93	16.19	13.1	14.2	ns
11a	STCK high to STXD high	1.25	3.42	1.1	3.0	ns

Table 41. SSI 2 (Port C Alternate Function) Timing Parameter Table (Continued)

Ref No.	Parameter	1.8V +/- 0.10V		3.0V +/- 0.30V		Unit
		Minimum	Maximum	Minimum	Maximum	
11b	STCK high to STXD low	2.51	3.99	2.2	3.5	ns
12	STCK high to STXD high impedance	12.43	14.59	10.9	12.8	ns
13	SRXD setup time before SRCK low	20	–	17.5	–	ns
14	SRXD hold time after SRCK low	0	–	0	–	ns
External Clock Operation (Port C Alternate Function)[2]						
15	STCK/SRCK clock period[1]	92.8	–	81.4	–	ns
16	STCK/SRCK clock high period	27.1	–	40.7	–	ns
17	STCK/SRCK clock low period	61.1	–	40.7	–	ns
18	STCK high to STFS (bl) high[3]	–	92.8	0	81.4	ns
19	SRCK high to SRFS (bl) high[3]	–	92.8	0	81.4	ns
20	STCK high to STFS (bl) low[3]	–	92.8	0	81.4	ns
21	SRCK high to SRFS (bl) low[3]	–	92.8	0	81.4	ns
22	STCK high to STFS (wl) high[3]	–	92.8	0	81.4	ns
23	SRCK high to SRFS (wl) high[3]	–	92.8	0	81.4	ns
24	STCK high to STFS (wl) low[3]	–	92.8	0	81.4	ns
25	SRCK high to SRFS (wl) low[3]	–	92.8	0	81.4	ns
26	STCK high to STXD valid from high impedance	18.9	29.07	16.6	25.5	ns
27a	STCK high to STXD high	9.23	20.75	8.1	18.2	ns
27b	STCK high to STXD low	10.60	21.32	9.3	18.7	ns
28	STCK high to STXD high impedance	17.90	29.75	15.7	26.1	ns
29	SRXD setup time before SRCK low	1.14	–	1.0	–	ns
30	SRXD hole time after SRCK low	0	–	0	–	ns
Synchronous Internal Clock Operation (Port C Alternate Function)[2]						
31	SRXD setup before STCK falling	18.81	–	16.5	–	ns
32	SRXD hold after STCK falling	0	–	0	–	ns
Synchronous External Clock Operation (Port C Alternate Function)[2]						
33	SRXD setup before STCK falling	1.14	–	1.0	–	ns
34	SRXD hold after STCK falling	0	–	0	–	ns

1 All the timings for both SSI modules are given for a non-inverted serial clock polarity (TSCKP/RSCKP = 0) and a non-inverted frame sync (TFSI/RFSI = 0). If the polarity of the clock and/or the frame sync have been inverted, all the timing remains valid by inverting the clock signal STCK/SRCK and/or the frame sync STFS/SRFS shown in the tables and in the figures.

2 There is one set of I/O signals for the SSI2 module. They are from Port C alternate function (PC19 – PC24). When SSI signals are configured as outputs, they can be viewed at Port C alternate function a. When SSI signals are configured as inputs, the SSI module selects the input based on FMCR register bits in the Clock controller module (CRM). By default, the input is selected from Port C alternate function.

3 bl = bit length; wl = word length

4.17 CMOS Sensor Interface

The CMOS Sensor Interface (CSI) module consists of a control register to configure the interface timing, a control register for statistic data generation, a status register, interface logic, a 32 × 32 image data receive FIFO, and a 16 × 32 statistic data FIFO.

4.17.1 Gated Clock Mode

Figure 68 shows the timing diagram when the CMOS sensor output data is configured for negative edge and the CSI is programmed to received data on the positive edge. Figure 69 shows the timing diagram when the CMOS sensor output data is configured for positive edge and the CSI is programmed to received data in negative edge. The parameters for the timing diagrams are listed in Table 42.

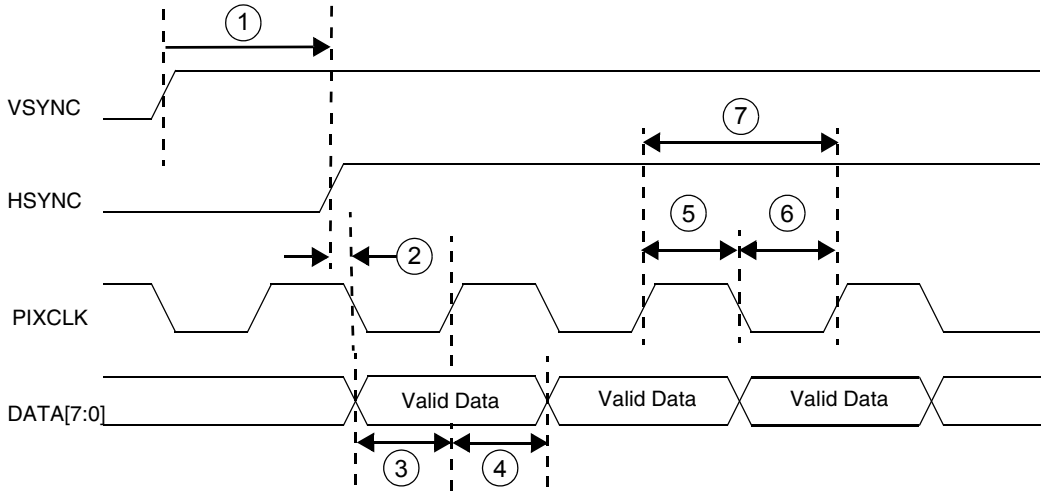

Figure 68. Sensor Output Data on Pixel Clock Falling Edge CSI Latches Data on Pixel Clock Rising Edge

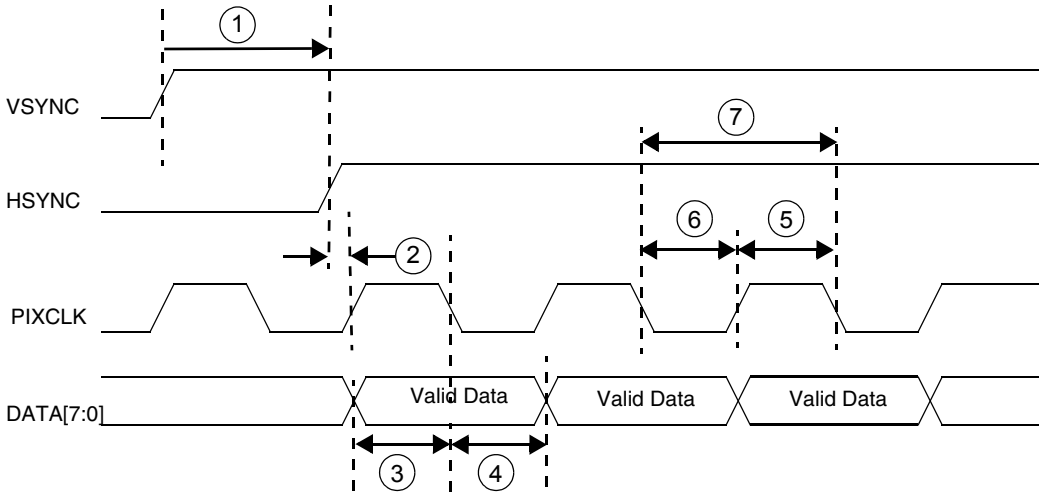

Figure 69. Sensor Output Data on Pixel Clock Rising Edge
CSI Latches Data on Pixel Clock Falling Edge

Table 42. Gated Clock Mode Timing Parameters

Ref No.	Parameter	Min	Max	Unit
1	csi_vsync to csi_hsync	180	–	ns
2	csi_hsync to csi_pixclk	1	–	ns
3	csi_d setup time	1	–	ns
4	csi_d hold time	1	–	ns
5	csi_pixclk high time	10.42	–	ns
6	csi_pixclk low time	10.42	–	ns
7	csi_pixclk frequency	0	48	MHz

The limitation on pixel clock rise time / fall time are not specified. It should be calculated from the hold time and setup time, according to:

Rising-edge latch data

max rise time allowed = (positive duty cycle - hold time)
max fall time allowed = (negative duty cycle - setup time)

In most of case, duty cycle is 50 / 50, therefore

max rise time = (period / 2 - hold time)
max fall time = (period / 2 - setup time)

For example: Given pixel clock period = 10ns, duty cycle = 50 / 50, hold time = 1ns, setup time = 1ns.

positive duty cycle = 10 / 2 = 5ns
=> max rise time allowed = 5 - 1 = 4ns

negative duty cycle = 10 / 2 = 5ns
=> max fall time allowed = 5 - 1 = 4ns

Falling-edge latch data

max fall time allowed = (negative duty cycle - hold time)
max rise time allowed = (positive duty cycle - setup time)

4.17.2 Non-Gated Clock Mode

Figure 70 shows the timing diagram when the CMOS sensor output data is configured for negative edge and the CSI is programmed to received data on the positive edge. Figure 71 shows the timing diagram when the CMOS sensor output data is configured for positive edge and the CSI is programmed to received data in negative edge. The parameters for the timing diagrams are listed in Table 43.

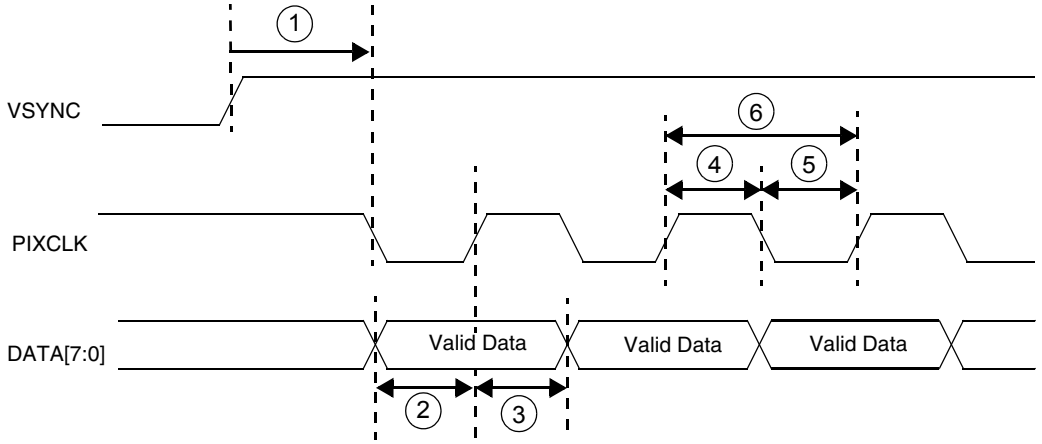

Figure 70. Sensor Output Data on Pixel Clock Falling Edge CSI Latches Data on Pixel Clock Rising Edge

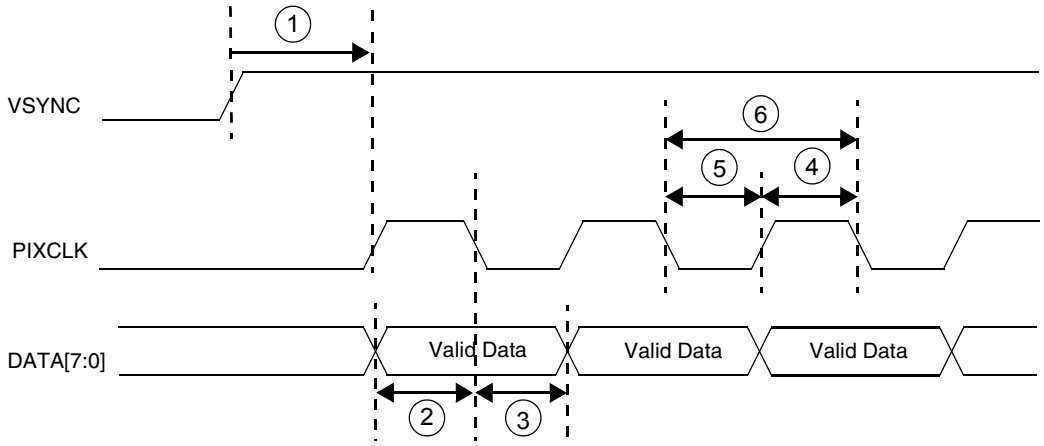

Figure 71. Sensor Output Data on Pixel Clock Rising Edge CSI Latches Data on Pixel Clock Falling Edge

Table 43. Non-Gated Clock Mode Parameters

Ref No.	Parameter	Min	Max	Unit
1	csi_vsync to csi_pixclk	180	–	ns
2	csi_d setup time	1	–	ns

Table 43. Non-Gated Clock Mode Parameters (Continued)

Ref No.	Parameter	Min	Max	Unit
3	csi_d hold time	1	–	ns
4	csi_pixclk high time	10.42	–	ns
5	csi_pixclk low time	10.42	–	ns
6	csi_pixclk frequency	0	48	MHz

The limitation on pixel clock rise time / fall time are not specified. It should be calculated from the hold time and setup time, according to:

max rise time allowed = (positive duty cycle - hold time)
max fall time allowed = (negative duty cycle - setup time)

In most of case, duty cycle is 50 / 50, therefore:

max rise time = (period / 2 - hold time)
max fall time = (period / 2 - setup time)

For example: Given pixel clock period = 10ns, duty cycle = 50 / 50, hold time = 1ns, setup time = 1ns.

positive duty cycle = 10 / 2 = 5ns
=> max rise time allowed = 5 - 1 = 4ns

negative duty cycle = 10 / 2 = 5ns
=> max fall time allowed = 5 - 1 = 4ns

Falling-edge latch data

max fall time allowed = (negative duty cycle - hold time)
max rise time allowed = (positive duty cycle - setup time)

5 Pin-Out and Package Information

Table 44 illustrates the package pin assignments for the 256-pin MAPBGA package. For a complete listing of signals, see the Signal Multiplexing Table 3 on page 11.

Table 44. i.MX1 256 MAPBGA Pin Assignments

	1	2	3	4	5	6	7	8	9	10	11	12	13	14	15	16	
A	NVSS	SD_DAT3	SD_CLK	NVSS	USBD_ AFE	NVDD4	NVSS	UART1_ RTS	UART1_ RXD	NVDD3	BT5	BT3	QVDD4	RVP	UIP	N.C.	A
B	A24	SD_DAT1	SD_CMD	SIM_TX	USBD_ ROE	USBD_VP	SSI_RXCLK	SSI_TXCLK	SPI1_ SCLK	BT11	BT7	BT1	QVSS	RVM	UIN	N.C.	B
C	A23	D31	SD_DAT0	SIM_PD	USBD_ RCV	UART2_ CTS	UART2_ RXD	SSI_ RXFS	UART1_ TXD	BTRFGND	BT8	BTRFVDD	N.C.	AVDD2[1]	VSS	R1B	C
D	A22	D30	D29	SIM_SVEN	USBD_ SUSPND	USBD_ VPO	USBD_ VMO	SSI_RXDAT	SPI1_ SPI_RDY	BT13	BT6	N.C.	N.C.	N.C.	R1A	R2B	D
E	A20	A21	D28	D26	SD_DAT2	USBD_VM	UART2_ RTS	SSI_TXDAT	SPI1_SS	BT12	BT4	N.C.	N.C.	PY2	PX2	R2A	E
F	A18	D27	D25	A19	A16	SIM_RST	UART2_ TXD	SSI_TXFS	SPI1_ MISO	BT10	BT2	REV	PY1	PX1	LSCLK	SPL_SPR	F
G	A15	A17	D24	D23	D21	SIM_RX	SIM_CLK	UART1_ CTS	SPI1_ MOSI	BT9	CLS	CONTRAST	ACD/OE	LP/ HSYNC	FLM/ VSYNC	LD1	G
H	A13	D22	A14	D20	NVDD1	NVDD1	NVSS	QVSS	QVDD1	PS	LD0	LD2	LD4	LD5	LD9	LD3	H
J	A12	A11	D18	D19	NVDD1	NVDD1	NVSS	NVDD1	NVSS	NVSS	LD6	LD7	LD8	LD11	QVDD3	QVSS	J
K	A10	D16	A9	D17	NVDD1	NVSS	NVSS	NVDD1	NVDD2	NVDD2	LD10	LD12	LD13	LD14	TMR2OUT	LD15	K
L	A8	A7	D13	D15	D14	NVDD1	NVSS	CAS	TCK	TIN	PWMO	CSI_MCLK	CSI_D0	CSI_D1	CSI_D2	CSI_D3	L
M	A5	D12	D11	A6	SDCLK	NVSS	RW	MA10	RAS	RESET_IN	BIG_ ENDIAN	CSI_D4	CSI_ HSYNC	CSI_VSYNC	CSI_D6	CSI_D5	M
N	A4	EB1	D10	D7	A0	D4	PA17	D1	DQM1	RESET_SF[2]	RESET_ OUT	BOOT2	CSI_ PIXCLK	CSI_D7	TMS	TDI	N
P	A3	D9	EB0	CS3	D6	ECB	D2	D3	DQM3	SDCKE1	BOOT3	BOOT0	TRST	I2C_SCL	I2C_SDA	XTAL32K	P
R	EB2	EB3	A1	CS4	D8	D5	LBA	BCLK[3]	D0	DQM0	SDCKE0	POR	BOOT1	TDO	QVDD2	EXTAL32K	R
T	NVSS	A2	OE	CS5	CS2	CS1	CS0	MA11	DQM2	SDWE	CLKO	AVDD1	TRISTATE	EXTAL16M	XTAL16M	QVSS	T
	1	2	3	4	5	6	7	8	9	10	11	12	13	14	15	16	

1 ASP signals are clamped by AVDD2 to prevent ESD (Electrostatic Discharge) damage. AVDD2 must be greater than QVDD to keep diodes reversed-biased.

2 This signal is not used and should be floated in an actual application.

3 burst clock

5.1 MAPBGA 256 Package Dimensions

Figure 72 illustrates the 256 MAPBGA 14 mm × 14 mm × 1.30 mm package, with an 0.8 mm pad pitch. The device designator for the MAPBGA package is VH.

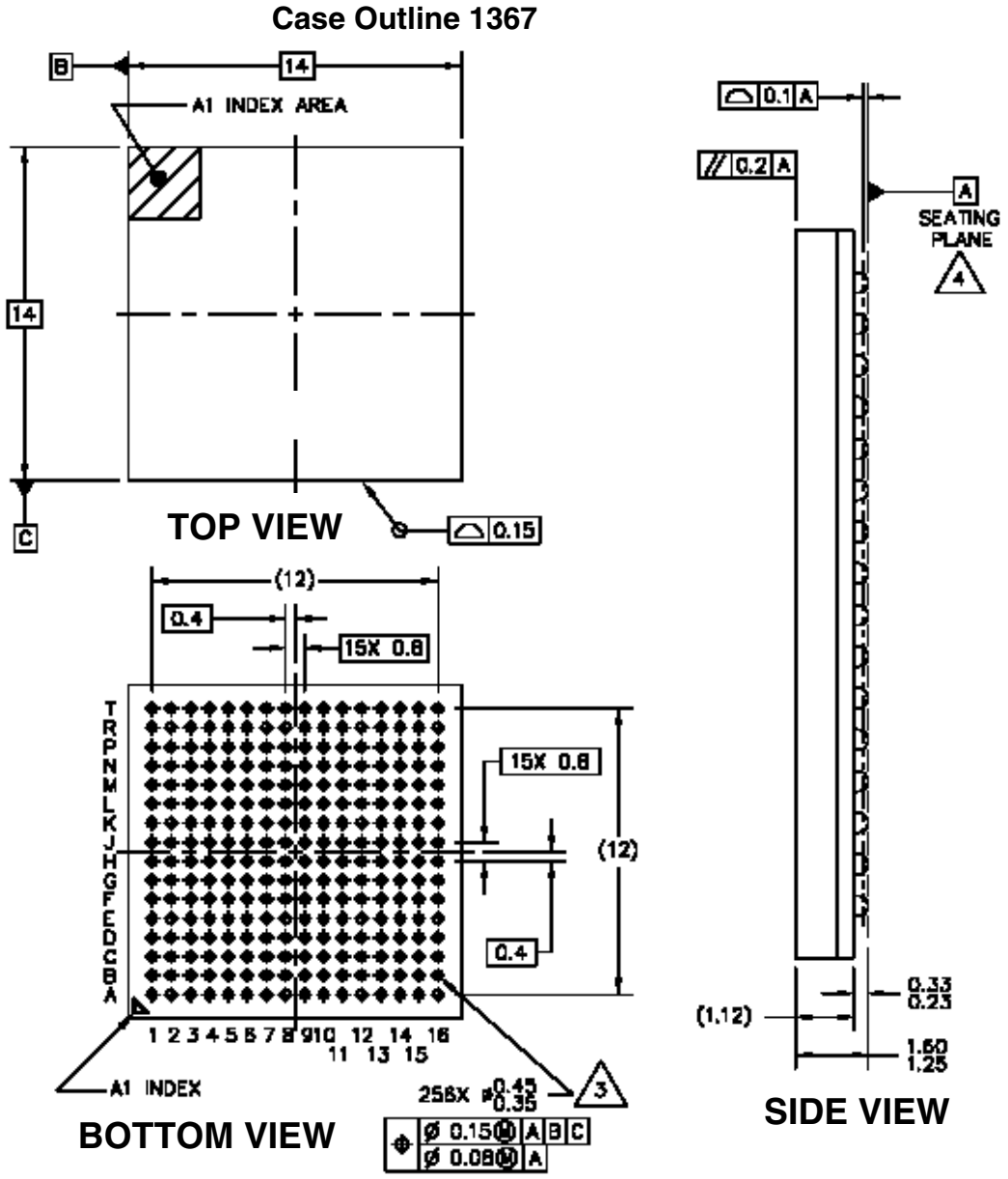

NOTES:
1. ALL DIMENSIONS ARE IN MILLIMETERS.
2.INTERPRET DIMENSIONS AND TOLERANCES PER ASME Y14 5M-1994.
3.MAXIMUM SOLDER BALL DIAMETER MEASURED PARALLEL TO DATUM A.
4. DATUM A, THE SEATING PLANE IS DEFINED BY SPHERICAL CROWNS OF THE SOLDER BALLS.

Figure 72. i.MXL 256 MAPBGA Mechanical Drawing

6 Product Documentation

6.1 Revision History

Table 45 provides revision history for this release. This history includes technical content revisions only and not stylistic or grammatical changes.

Table 45. i.MX1 Data Sheet Revision History Rev. 7

Location	Revision
Table 1 on page 3 Signal Names and Descriptions	• Added the DMA_REQ signal to table. • Corrected signal name from $\overline{\text{USBD_OE}}$ to $\overline{\text{USBD_ROE}}$ • Corrected signal names From: C10 BTRFGN, To: BTRFGND From: G6 SIM_RST, To: SIM_RX From: G7 UART2_TXD, To: SIM_CLK
Table 3 on page 11 Signal Multiplex Table i.MX1	Added Signal Multiplex table from Reference Manual with the following changes: • Changed I/O Supply Voltage, PB31–14, from NVDD3 to NVDD4 • Corrected footnotes 1–5. • Changed AVDD2 references to QVDD, except for C14. Added footnote regarding ESD. • Changed occurrence of SD_SCLK to SD_CLK. • Removed 69K pull-up resistor from EB1, EB2, and added to D9
Table 10 on page 26	Changed first and second parameters descriptions: From: Reference Clock freq range, To: DPLL input clock freq range From: Double clock freq range, To: DPLL output freq range
Table 3 on page 11	Added Signal Multiplex table.

6.2 Reference Documents

The following documents are required for a complete description of the MC9328MX1 and are necessary to design properly with the device. Especially for those not familiar with the ARM920T processor or previous i.MX processor products, the following documents are helpful when used in conjunction with this document.

ARM Architecture Reference Manual (ARM Ltd., order number ARM DDI 0100)

ARM9DT1 Data Sheet Manual (ARM Ltd., order number ARM DDI 0029)

ARM Technical Reference Manual (ARM Ltd., order number ARM DDI 0151C)

EMT9 Technical Reference Manual (ARM Ltd., order number DDI O157E)

MC9328MX1 Product Brief (order number MC9328MX1P)

MC9328MX1 Reference Manual (order number MC9328MX1RM)

The Freescale manuals are available on the Freescale Semiconductors Web site at http://www.freescale.com/imx. These documents may be downloaded directly from the Freescale Web site, or printed versions may be ordered. The ARM Ltd. documentation is available from http://www.arm.com.

NOTES

How to Reach Us:

Home Page:
www.freescale.com

E-mail:
support@freescale.com

USA/Europe or Locations Not Listed:
Freescale Semiconductor
Technical Information Center, CH370
1300 N. Alma School Road
Chandler, Arizona 85224
+1-800-521-6274 or +1-480-768-2130
support@freescale.com

Europe, Middle East, and Africa:
Freescale Halbleiter Deutschland GmbH
Technical Information Center
Schatzbogen 7
81829 Muenchen, Germany
+44 1296 380 456 (English)
+46 8 52200080 (English)
+49 89 92103 559 (German)
+33 1 69 35 48 48 (French)
support@freescale.com

Japan:
Freescale Semiconductor Japan Ltd.
Headquarters
ARCO Tower 15F
1-8-1, Shimo-Meguro, Meguro-ku,
Tokyo 153-0064, Japan
0120 191014 or +81 3 5437 9125
support.japan@freescale.com

Asia/Pacific:
Freescale Semiconductor Hong Kong Ltd.
Technical Information Center
2 Dai King Street
Tai Po Industrial Estate
Tai Po, N.T., Hong Kong
+800 2666 8080
support.asia@freescale.com

***For Literature Requests Only*:**
Freescale Semiconductor Literature Distribution Center
P.O. Box 5405
Denver, Colorado 80217
1-800-521-6274 or 303-675-2140
Fax: 303-675-2150
LDCForFreescaleSemiconductor@hibbertgroup.com

Information in this document is provided solely to enable system and software implementers to use Freescale Semiconductor products. There are no express or implied copyright licenses granted hereunder to design or fabricate any integrated circuits or integrated circuits based on the information in this document.

Freescale Semiconductor reserves the right to make changes without further notice to any products herein. Freescale Semiconductor makes no warranty, representation or guarantee regarding the suitability of its products for any particular purpose, nor does Freescale Semiconductor assume any liability arising out of the application or use of any product or circuit, and specifically disclaims any and all liability, including without limitation consequential or incidental damages. “Typical” parameters that may be provided in Freescale Semiconductor data sheets and/or specifications can and do vary in different applications and actual performance may vary over time. All operating parameters, including “Typicals”, must be validated for each customer application by customer’s technical experts. Freescale Semiconductor does not convey any license under its patent rights nor the rights of others. Freescale Semiconductor products are not designed, intended, or authorized for use as components in systems intended for surgical implant into the body, or other applications intended to support or sustain life, or for any other application in which the failure of the Freescale Semiconductor product could create a situation where personal injury or death may occur. Should Buyer purchase or use Freescale Semiconductor products for any such unintended or unauthorized application, Buyer shall indemnify and hold Freescale Semiconductor and its officers, employees, subsidiaries, affiliates, and distributors harmless against all claims, costs, damages, and expenses, and reasonable attorney fees arising out of, directly or indirectly, any claim of personal injury or death associated with such unintended or unauthorized use, even if such claim alleges that Freescale Semiconductor was negligent regarding the design or manufacture of the part.

Freescale™ and the Freescale logo are trademarks of Freescale Semiconductor, Inc. ARM and the ARM POWERED logo are the registered trademarks of ARM Limited. ARM9, ARM920T, and ARM9TDMI are the trademarks of ARM Limited. All other product or service names are the property of their respective owners.

© Freescale Semiconductor, Inc. 2006. All rights reserved.

RoHS-compliant and/or Pb-free versions of Freescale products have the functionality and electrical characteristics of their non-RoHS-compliant and/or non-Pb-free counterparts. For further information, see http://www.freescale.com or contact your Freescale sales representative.

For information on Freescale’s Environmental Products program, go to http://www.freescale.com/epp.

Document Number: MC9328MX1
Rev. 7
12/2006

freescale™
semiconductor

Компания «ЭлектроПласт» предлагает заключение долгосрочных отношений при поставках импортных электронных компонентов на взаимовыгодных условиях!

Наши преимущества:

- Оперативные поставки широкого спектра электронных компонентов отечественного и импортного производства напрямую от производителей и с крупнейших мировых складов;
- Поставка более 17-ти миллионов наименований электронных компонентов;
- Поставка сложных, дефицитных, либо снятых с производства позиций;
- Оперативные сроки поставки под заказ (от 5 рабочих дней);
- Экспресс доставка в любую точку России;
- Техническая поддержка проекта, помощь в подборе аналогов, поставка прототипов;
- Система менеджмента качества сертифицирована по Международному стандарту ISO 9001;
- Лицензия ФСБ на осуществление работ с использованием сведений, составляющих государственную тайну;
- Поставка специализированных компонентов (Xilinx, Altera, Analog Devices, Intersil, Interpoint, Microsemi, Aeroflex, Peregrine, Syfer, Eurofarad, Texas Instrument, Miteq, Cobham, E2V, MA-COM, Hittite, Mini-Circuits,General Dynamics и др.);

Помимо этого, одним из направлений компании «ЭлектроПласт» является направление «Источники питания». Мы предлагаем Вам помощь Конструкторского отдела:

- Подбор оптимального решения, техническое обоснование при выборе компонента;
- Подбор аналогов;
- Консультации по применению компонента;
- Поставка образцов и прототипов;
- Техническая поддержка проекта;
- Защита от снятия компонента с производства.

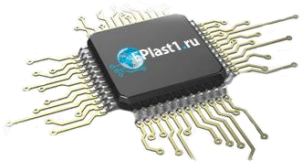

Как с нами связаться

Телефон: 8 (812) 309 58 32 (многоканальный)
Факс: 8 (812) 320-02-42
Электронная почта: org@eplast1.ru
Адрес: 198099, г. Санкт-Петербург, ул. Калинина, дом 2, корпус 4, литера А.