PRODUCT NO.	CABLES
62435-001	RG196A/U RG178B/U 0.8DS-PBE
-001LF	
62435-101	RG196A/U RG178B/U 0.8DS-PBE
-101LF	

① INNER CONTACT

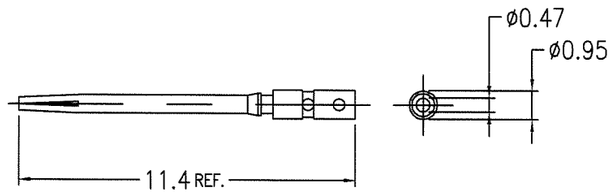

② BODY

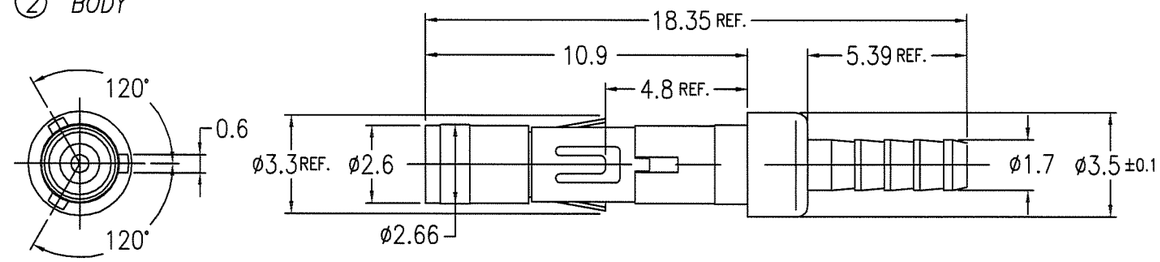

③ CRIMP SLEEVE

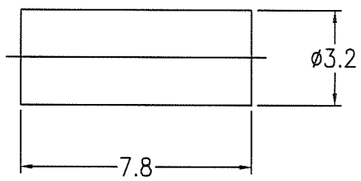

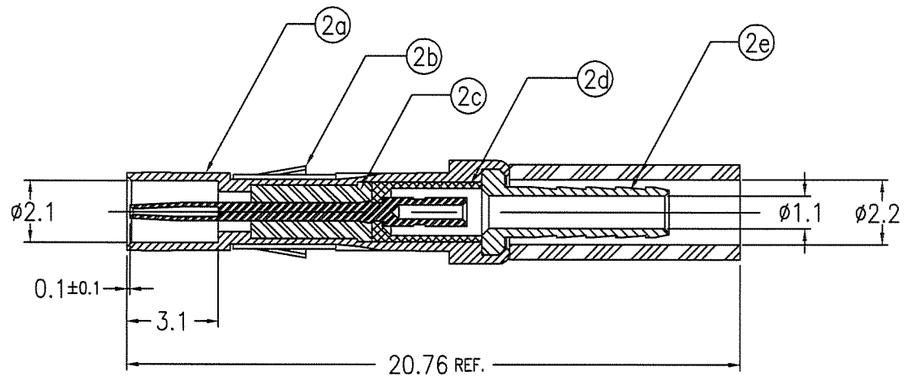

AFTER ASSY

No.	DESCRIPTION	MATERIAL	PLATING
①	INNER CONTACT	BERYLLIUM COPPER	Au 1.27um MIN. (FOR -001) Au 0.8um MIN. (FOR -101)
②	BODY		
2a	SHELL	BRASS	Au 1.27um MIN. (FOR -001) Au 0.8um MIN. (FOR -101)
2b	SPRING CLIP	BERYLLIUM COPPER	Ni 1.27um MIN.
2c	FRONT INSULATOR	PTFE	
2d	REAR INSULATOR	PTFE	
2e	FERRULE	BRASS	Au 0.05um MIN.
③	CRIMP SLEEVE	BRASS	Au 0.05um MIN. (FOR -001) Ni 1.27um MIN. (FOR -101)

NOTES

1. PULL OUT FOR OF CENTER CONTACT
   MUST BE 0.2N MIN. / 0.8N MAX.
2. ASSEMBLE PRODUCT WITH TOOL HT430
   USE INSERTS EPL 193460-001
3. FOR LEAD FREE P/N, THE PRODUCT MEET EUROPEAN UNION DIRECTIVES
   AND OTHER COUNTRY REGULATIONS AS DESCRIBED IN GS-22-008
4. THE PRODUCT IS NOT INTENDED TO BE EXPOSED TO A MANUFACTURING SOLDER PROCESS.

ltr	description	ecn no	dr	date
D	REVISED	J00331	Y.K	5/10/'00
E	REVISED	J00951	Y.K	12/12/'00
F	REVISED	J10393	Y.K	7/6/'01
G	REVISED	J20204	Y.K	4/10/'02
H	REVISED	J03-0172	Y.K	4/10/'03
J	REVISED	J05-0670	T.S	10/21/'05
K	REVISED	J07-0039	S.O	1/22/'07

mat'l. code: ---

surface ISO 1302 ✓ — tolerance ISO 406 ISO 1101 — tolerances unless otherwise specified: angles 0°±3°; linear 0.X ±0.2, 0.XX ±0.2, 0.XXX ±0.2

projection — MM — scale 5:1

dr	Y.KODAIRA	1/28/'99
engr	S.OKUDAIRA	1/22/'07
chr	R. Shoji	1/22/'07
appd	S. Okudaira	1/22/'07

product family: METRAL — CODE JP

title: METRAL MINICOAX CONTACT KIT FEMALE SOLDER-TO-WIRE

dwg no: 62435 — sheet 1 of 8 — size A3

type: Customer Drawing

sheet index	revision	K	F	E	E	D	C	C	C
	sheet	1	2	3	4	5	6	7	8

Rev. K

FCIconnect.com
Copyright FCI.

form: A3

PDM: Rev:K STATUS: Released Printed: Jun 07, 2010

PRODUCT NO.	CABLES
62435-002	RG188A/U RG316/U
-002LF	
62435-102	RG188A/U RG316/U
-102LF	

① INNER CONTACT

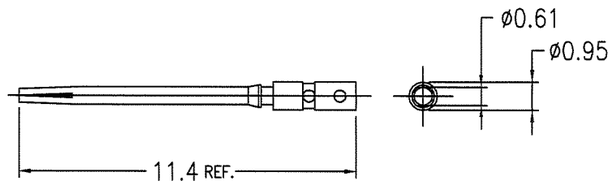

② BODY

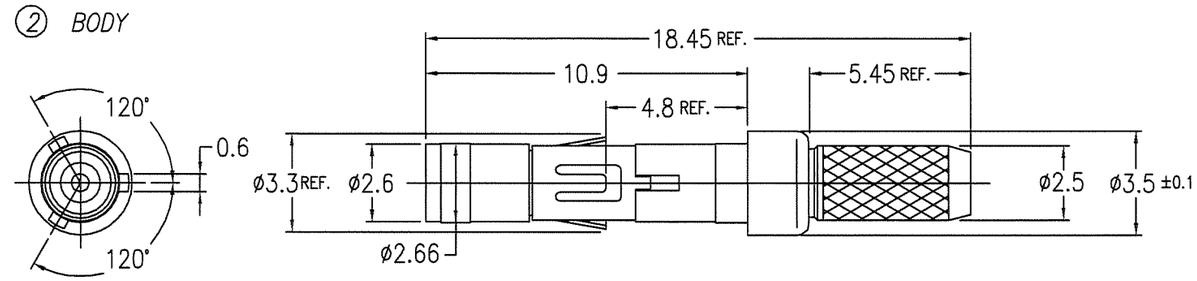

③ CRIMP SLEEVE

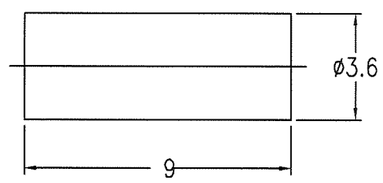

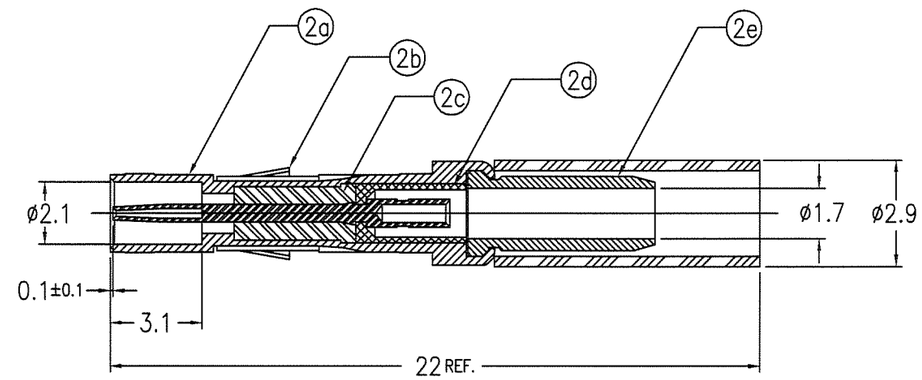

AFTER ASSY

No.	DESCRIPTION	MATERIAL	PLATING
①	INNER CONTACT	BERYLLIUM COPPER	Au 1.27um MIN. (FOR -002) Au 0.8um MIN. (FOR -102)
②	BODY		
2a	SHELL	BRASS	Au 1.27um MIN. (FOR -002) Au 0.8um MIN. (FOR -102)
2b	SPRING CLIP	BERYLLIUM COPPER	Ni 1.27um MIN.
2c	FRONT INSULATOR	PTFE	
2d	REAR INSULATOR	PTFE	
2e	FERRULE	BRASS	Au 0.05um MIN.
③	CRIMP SLEEVE	BRASS	Au 0.05um MIN. (FOR -002) Ni 1.27um MIN. (FOR -102)

NOTES

1. PULL OUT FOR OF CENTER CONTACT
   MUST BE 0.2N MIN. / 0.8N MAX.
2. ASSEMBLE PRODUCT WITH TOOL HT430
   USE INSERTS EPL 193460-001
3. FOR LEAD FREE P/N, THE PRODUCT MEET EUROPEAN UNION DIRECTIVES
   AND OTHER COUNTRY REGULATIONS AS DESCRIBED IN GS-22-008
4. THE PRODUCT IS NOT INTENDED TO BE EXPOSED TO A MANUFACTURING SOLDER PROCESS.

ltr	description	ecn no	dr	date
A	REVISED	J90110	Y.K	3/31/'99
B	REVISED	J00062	Y.K	1/21/'00
C	REVISED	J00331	Y.K	5/10/'00
D	REVISED	J20204	Y.K	4/10/'02
E	REVISED	J05-0670	T.S	10/21/'05
F	REVISED	J07-0039	S.O	1/22/'07

mat'l. code: ---

surface: ISO 1302

tolerance: ISO 406, ISO 1101

tolerances unless otherwise specified: angles 0°±3°; linear 0.X ±0.2, 0.XX ±0.2, 0.XXX ±0.2

projection: MM

scale 5:1

dr	Y.KODAIRA	3/31/'99
engr	S.OKUDAIRA	1/22/'07
chr	R. Shiraji	1/22/'07
appd	S. Okudaira	1/22/'07

product family: METRAL

CODE: JP

title: METRAL MINICOAX CONTACT KIT FEMALE SOLDER-TO-WIRE

dwg no: 62435

sheet 2 of

size: A3

type: Customer Drawing

sheet index: revision / sheet

Rev. F

form: A3

FCIconnect.com
Copyright FCI.

PRODUCT NO.	CABLES CABLES
62435-003	DOUBLE SHIELDED TYPE M17/152-0001(HARBOUR INDUSTRIES)
-003LF	
62435-103	DOUBLE SHIELDED TYPE M17/152-0001(HARBOUR INDUSTRIES)
-103LF	

① INNER CONTACT

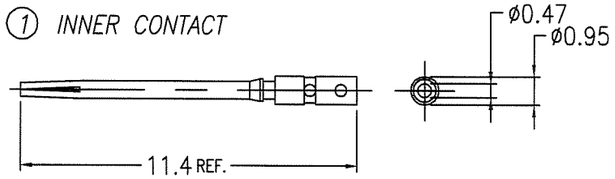

② BODY

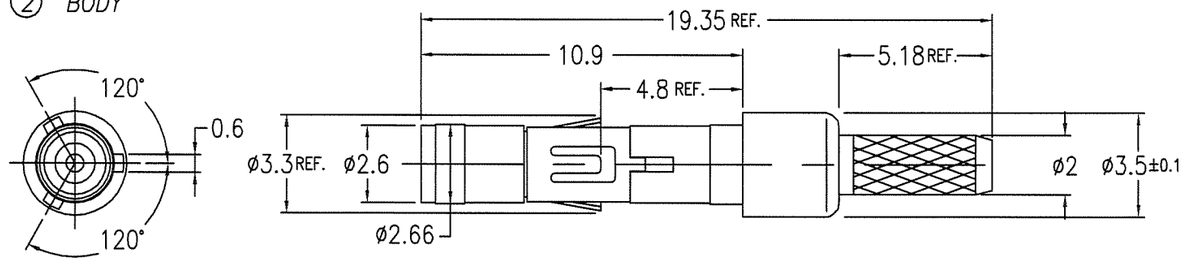

③ CRIMP SLEEVE

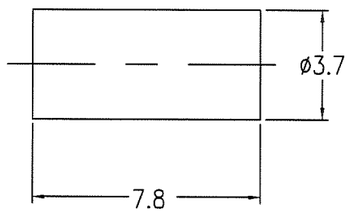

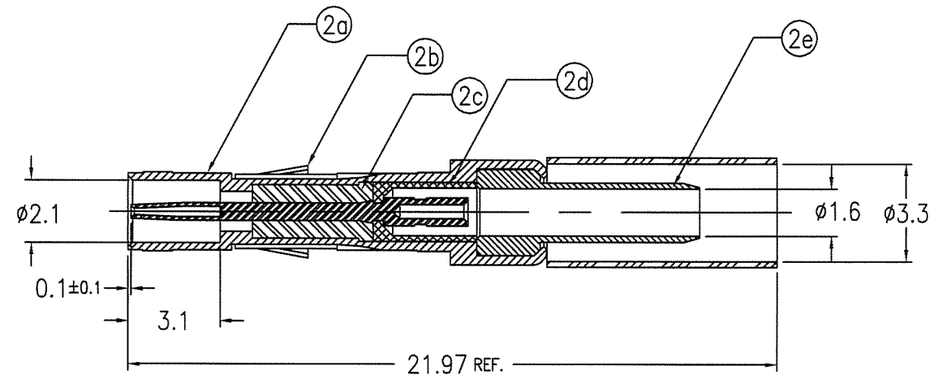

AFTER ASSY

No.	DESCRIPTION	MATERIAL	PLATING
①	INNER CONTACT	BERYLLIUM COPPER	Au 1.27um MIN. (FOR -003) Au 0.8um MIN. (FOR -103)
②	BODY		
2a	SHELL	BRASS	Au 1.27um MIN. (FOR -003) Au 0.8um MIN. (FOR -103)
2b	SPRING CLIP	BERYLLIUM COPPER	Ni 1.27um MIN.
2c	FRONT INSULATOR	PTFE	
2d	REAR INSULATOR	PTFE	
2e	FERRULE	BRASS	Au 0.05um MIN.
③	CRIMP SLEEVE	BRASS	Au 0.05um MIN. (FOR -003) Ni 1.27um MIN. (FOR -103)

NOTES

1. PULL OUT FOR OF CENTER CONTACT
   MUST BE 0.2N MIN. / 0.8N MAX.
2. ASSEMBLE PRODUCT WITH TOOL HT430
   USE INSERTS EPL 193460-001
3. FOR LEAD FREE P/N, THE PRODUCT MEET EUROPEAN UNION DIRECTIVES
   AND OTHER COUNTRY REGULATIONS AS DESCRIBED IN GS-22-008
4. THE PRODUCT IS NOT INTENDED TO BE EXPOSED TO A MANUFACTURING SOLDER PROCESS.

ltr	description	ecn no	dr	date
A	RELEASED	J90036	Y.K	1/28/'99
B	REVISED	J00062	Y.K	1/21/'00
C	REVISED	J00331	Y.K	5/10/'00
D	REVISED	J05-0670	T.S	10/21/'05
E	REVISED	J07-0039	S.O	1/22/'07

mat'l. code ---

surface ISO 1302 √ | tolerance ISO 406 ISO 1101 | projection | product family METRAL | CODE JP

tolerances unless otherwise specified: angles 0°±3°; linear 0.X ±0.2, 0.XX ±0.2, 0.XXX ±0.2

MM

scale 5:1

title: METRAL MINICOAX CONTACT KIT FEMALE SOLDER-TO-WIRE

dr	Y.KODAIRA	1/28/'99
engr	S.OKUDAIRA	1/22/'07
chr	R. Shoji	1/22/'07
appd	S. Okudaira	1/22/'07

dwg no 62435 | sheet 3 of | size A3

type Customer Drawing

sheet index | revision sheet | Rev. E

FCIconnect.com
Copyright FCI.

form: A3

PDM: Rev:K STATUS:Released Printed: Jun 07, 2010

PRODUCT NO.	CABLES
62435-004	1.5C-XV (SUMITOMO)
-004LF	1.5C-QEV.CW (FUJIKURA)
62435-104	1.5C-XV (SUMITOMO)
-104LF	1.5C-QEV.CW (FUJIKURA)

① INNER CONTACT

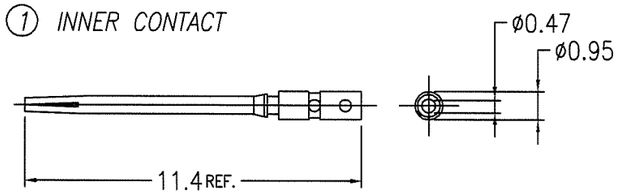

② BODY

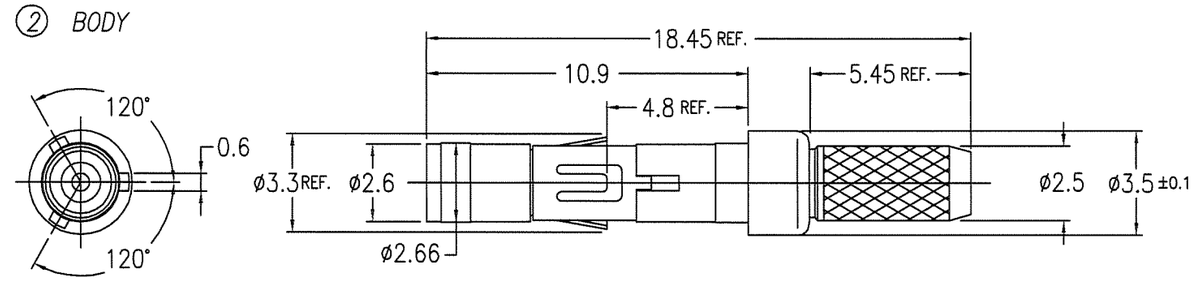

③ CRIMP SLEEVE

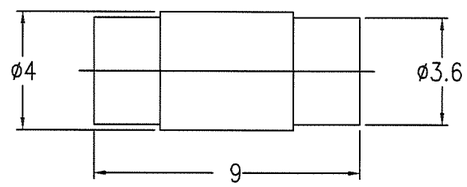

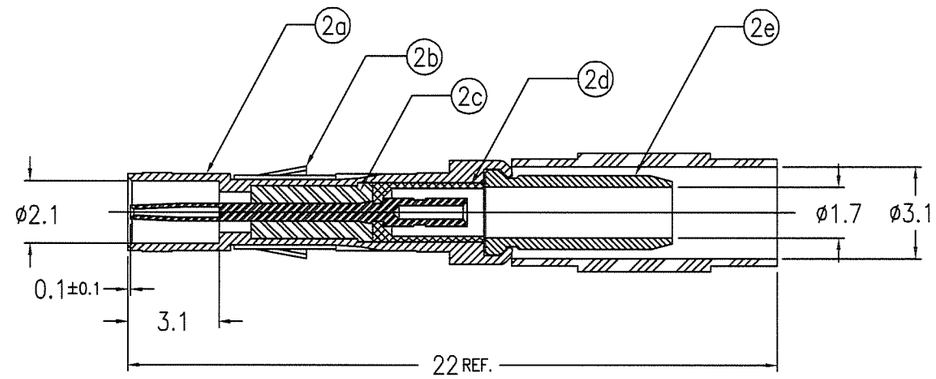

AFTER ASSY

No.	DESCRIPTION	MATERIAL	PLATING
①	INNER CONTACT	BERYLLIUM COPPER	Au 1.27um MIN. (FOR -004) Au 0.8um MIN. (FOR -104)
②	BODY		
2a	SHELL	BRASS	Au 1.27um MIN. (FOR -004) Au 0.8um MIN. (FOR -104)
2b	SPRING CLIP	BERYLLIUM COPPER	Ni 1.27um MIN.
2c	FRONT INSULATOR	PTFE	
2d	REAR INSULATOR	PTFE	
2e	FERRULE	BRASS	Au 0.05um MIN.
③	CRIMP SLEEVE	BRASS	Au 0.05um MIN. (FOR -004) Ni 1.27um MIN. (FOR -104)

NOTES

1. PULL OUT FOR OF CENTER CONTACT
   MUST BE 0.2N MIN. / 0.8N MAX.
2. ASSEMBLE PRODUCT WITH TOOL HT430
   USE INSERTS EPL 193460-001
3. FOR LEAD FREE P/N, THE PRODUCT MEET EUROPEAN UNION DIRECTIVES
   AND OTHER COUNTRY REGULATIONS AS DESCRIBED IN GS-22-008
4. THE PRODUCT IS NOT INTENDED TO BE EXPOSED TO A MANUFACTURING SOLDER PROCESS.

ltr	description	ecn no	dr	date
A	RELEASED	J90036	Y.K	1/28/'99
B	REVISED	J00062	Y.K	1/21/'00
C	REVISED	J00331	Y.K	5/10/'00
D	REVISED	J05-0670	T.S	10/21/'05
E	REVISED	J07-0039	S.O	1/22/'07

mat'l. code: ---

surface: ISO 1302

tolerance: ISO 406, ISO 1101

tolerances unless otherwise specified: angles 0°±3°; linear 0.X ±0.2, 0.XX ±0.2, 0.XXX ±0.2

projection

MM

scale 5:1

dr	Y.KODAIRA	1/28/'99
engr	S.OKUDAIRA	1/22/'07
chr	R. Shoji	1/22/'07
appd	S. Okudaira	1/22/'07

product family: METRAL

CODE JP

title: METRAL MINICOAX CONTACT KIT FEMALE SOLDER-TO-WIRE

dwg no: 62435

sheet 4 of

size: A3

type: Customer Drawing

sheet index | revision sheet

Rev. E

form: A3

FCIconnect.com
Copyright FCI.

PDM: Rev:K STATUS: Released Printed: Jun 07, 2010

PRODUCT NO.	CABLES
62435-005	1.5C-XW (SUMITOMO)
-005LF	
62435-105	1.5C-XW (SUMITOMO)
-105LF	

① INNER CONTACT

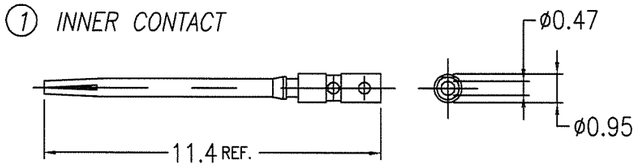

② BODY

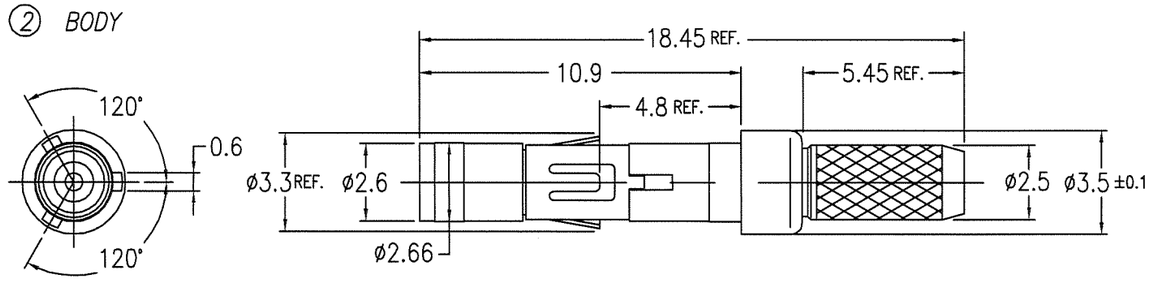

② CRIMP SLEEVE

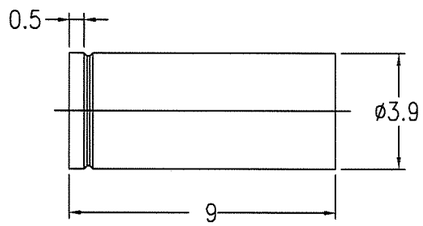

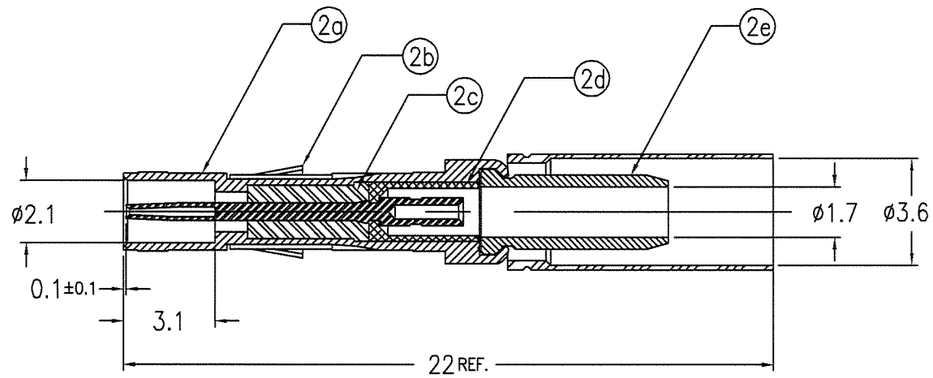

AFTER ASSY

No.	DESCRIPTION	MATERIAL	PLATING
①	INNER CONTACT	BERYLLIUM COPPER	Au 1.27um MIN. (FOR -005) Au 0.8um MIN. (FOR -105)
②	BODY		
2a	SHELL	BRASS	Au 1.27um MIN. (FOR -005) Au 0.8um MIN. (FOR -105)
2b	SPRING CLIP	BERYLLIUM COPPER	Ni 1.27um MIN.
2c	FRONT INSULATOR	PTFE	
2d	REAR INSULATOR	PTFE	
2e	FERRULE	BRASS	Au 0.05um MIN.
③	CRIMP SLEEVE	BRASS	Au 0.05um MIN. (FOR -005) Ni 1.27um MIN. (FOR -105)

NOTES

1. PULL OUT FOR OF CENTER CONTACT
   MUST BE 0.1N MIN. / 0.8N MAX.
2. ASSEMBLE PRODUCT WITH TOOL HT430
   USE INSERTS EPL 193460-001
3. FOR LEAD FREE P/N, THE PRODUCT MEET EUROPEAN UNION DIRECTIVES
   AND OTHER COUNTRY REGULATIONS AS DESCRIBED IN GS-22-008
4. THE PRODUCT IS NOT INTENDED TO BE EXPOSED TO A MANUFACTURING SOLDER PROCESS.

ltr	description	ecn no	dr	date
A	RELEASED	J00062	Y.K	1/21/'00
B	REVISED	J00331	Y.K	5/10/'00
C	REVISED	J05-0670	T.S	10/21/'05
D	REVISED	J07-0039	S.O	1/22/'07

mat'l. code: ---

surface: ISO 1302 √

tolerance: ISO 406, ISO 1101

tolerances unless otherwise specified: angles 0°±3°; linear 0.X ±0.2, 0.XX ±0.2, 0.XXX ±0.2

projection: MM

scale 5:1

dr	Y.KODAIRA	1/21/'00
engr	S.OKUDAIRA	1/22/'07
chr	R. Shouji	1/22/'07
appd	S. Okudaira	1/22/'07

product family: METRAL

CODE: JP

title: METRAL MINICOAX CONTACT KIT FEMALE SOLDER-TO-WIRE

dwg no: 62435

sheet 5 of

size: A3

type: Customer Drawing

sheet index | revision sheet

Rev. D

form: A3

FCIconnect.com
Copyright FCI.

PRODUCT NO.	CABLES
62435–006	RG187A/U RG179B/U
–006LF	
62435–106	RG187A/U RG179B/U
–106LF	

① INNER CONTACT

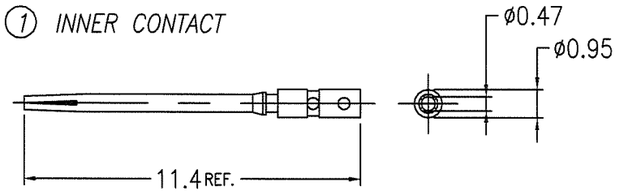

② BODY

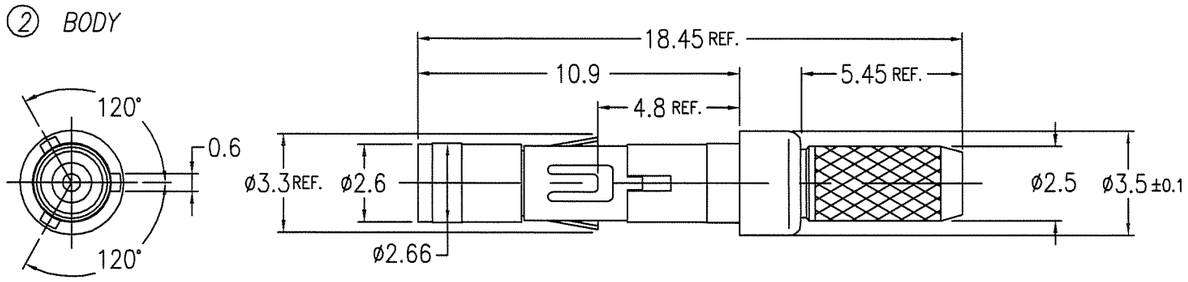

③ CRIMP SLEEVE

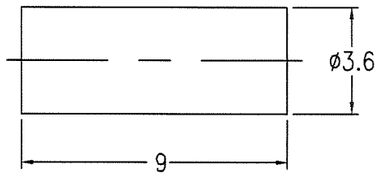

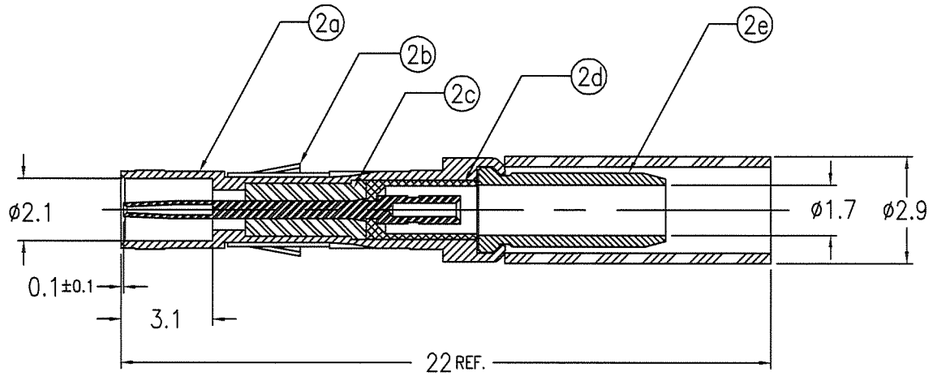

AFTER ASSY

No.	DESCRIPTION	MATERIAL	PLATING
①	INNER CONTACT	BERYLLIUM COPPER	Au 1.27um MIN. (FOR –006) Au 0.8um MIN. (FOR –106)
②	BODY		
②a	SHELL	BRASS	Au 1.27um MIN. (FOR –006) Au 0.8um MIN. (FOR –106)
②b	SPRING CLIP	BERYLLIUM COPPER	Ni 1.27um MIN.
②c	FRONT INSULATOR	PTFE	
②d	REAR INSULATOR	PTFE	
②e	FERRULE	BRASS	Au 0.05um MIN.
③	CRIMP SLEEVE	BRASS	Au 0.05um MIN. (FOR –006) Ni 1.27um MIN. (FOR –106)

NOTES

1. PULL OUT FOR OF CENTER CONTACT
   MUST BE 0.2N MIN. / 0.8N MAX.
2. ASSEMBLE PRODUCT WITH TOOL HT430
   USE INSERTS EPL 193460–001
3. FOR LEAD FREE P/N, THE PRODUCT MEET EUROPEAN UNION DIRECTIVES
   AND OTHER COUNTRY REGULATIONS AS DESCRIBED IN GS–22–008
4. THE PRODUCT IS NOT INTENDED TO BE EXPOSED TO A MANUFACTURING SOLDER PROCESS.

ltr	description	ecn no	dr	date
A	RELEASED	J00951	Y.K	12/12/'00
B	REVISED	J05–0670	T.S	10/21/'05
C	REVISED	J07–0039	S.O	1/22/'07

mat'l. code: ---

surface: ISO 1302

tolerance: ISO 406, ISO 1101

tolerances unless otherwise specified: angles 0°±3°; linear 0.X ±0.2, 0.XX ±0.2, 0.XXX ±0.2

projection: MM

scale 5:1

dr	Y.KODAIRA	12/12/'00
engr	S.OKUDAIRA	1/22/'07
chr	R. Shoji	1/22/'07
appd	S. Okudaira	1/22/'07

product family: METRAL

CODE: JP

title: METRAL MINICOAX CONTACT KIT FEMALE SOLDER–TO–WIRE

dwg no: 62435

sheet 6 of

size: A3

type: Customer Drawing

sheet index / revision sheet

Rev. C

form: A3

FCIconnect.com
Copyright FCI.

PRODUCT NO.	CABLES
62435-007	1.5DS-PBP
-007LF	
62435-107	1.5DS-PBP
-107LF	

① INNER CONTACT

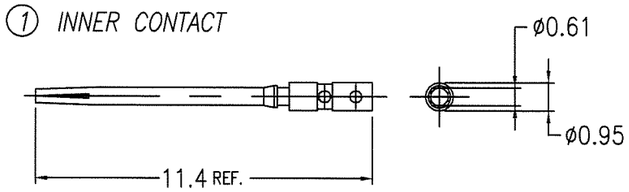

② BODY

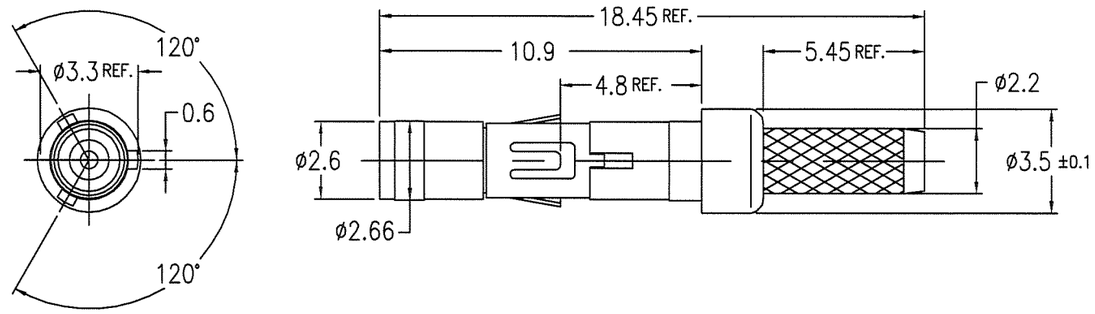

③ CRIMP SLEEVE

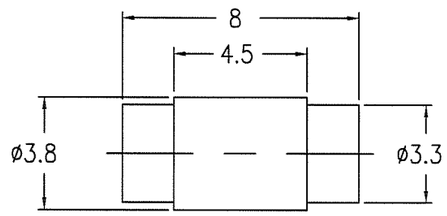

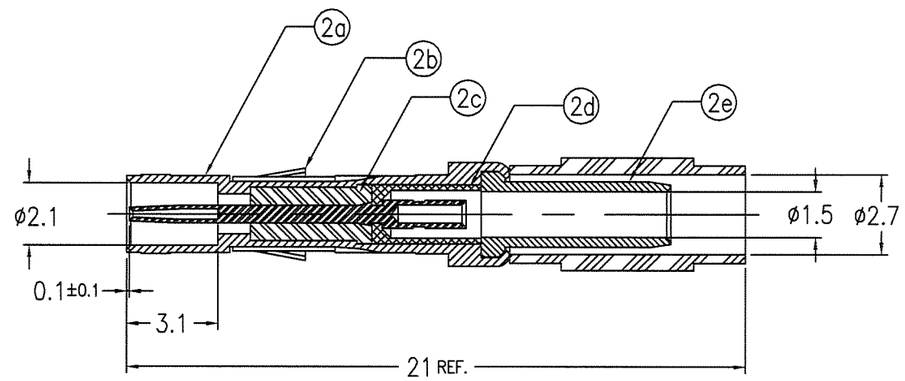

AFTER ASSY

No.	DESCRIPTION	MATERIAL	PLATING
①	INNER CONTACT	BERYLLIUM COPPER	Au 1.27um MIN. (FOR -001) Au 0.8um MIN. (FOR -101)
②	BODY		
2a	SHELL	BRASS	Au 1.27um MIN. (FOR -001) Au 0.8um MIN. (FOR -101)
2b	SPRING CLIP	BERYLLIUM COPPER	Ni 1.27um MIN.
2c	FRONT INSULATOR	PTFE	
2d	REAR INSULATOR	PTFE	
2e	FERRULE	BRASS	Au 0.05um MIN.
③	CRIMP SLEEVE	BRASS	Au 0.05um MIN. (FOR -001) Ni 1.27um MIN. (FOR -101)

NOTES

1. PULL OUT FOR OF CENTER CONTACT
   MUST BE 0.2N MIN. / 0.8N MAX.
2. ASSEMBLE PRODUCT WITH TOOL HT430
   USE INSERTS EPL 193460-001
3. FOR LEAD FREE P/N, THE PRODUCT MEET EUROPEAN UNION DIRECTIVES
   AND OTHER COUNTRY REGULATIONS AS DESCRIBED IN GS-22-008
4. THE PRODUCT IS NOT INTENDED TO BE EXPOSED TO A MANUFACTURING SOLDER PROCESS.

ltr	description	ecn no	dr	date
A	RELEASED	J10393	Y.K	7/6/'01
B	REVISED	J05-0670	T.S	10/21/'05
C	REVISED	J07-0039	S.O	1/22/'07

mat'l. code: ---
surface: ISO 1302
tolerance: ISO 406, ISO 1101
tolerances unless otherwise specified: angles 0°±3°; linear 0.X ±0.2, 0.XX ±0.2, 0.XXX ±0.2
projection
MM
scale 5:1

dr	Y.KODAIRA	7/6/'01
engr	S.OKUDAIRA	1/22/'07
chr	R. Shoji	1/22/'07
appd	S. Okudaira	1/22/'07

product family: METRAL
CODE: JP
title: METRAL MINICOAX CONTACT KIT FEMALE SOLDER-TO-WIRE
dwg no: 62435
sheet 7 of
size: A3
type: Customer Drawing
sheet index
revision sheet
Rev. C

FCIconnect.com
Copyright FCI.

PRODUCT NO.	CABLES
62435-108	1.5DS-xx, 1.5D-xx
-108LF	

① INNER CONTACT

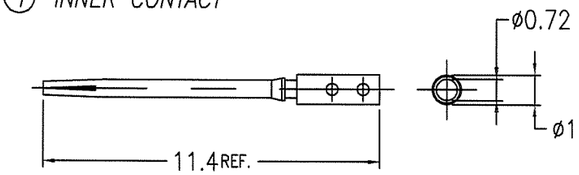

② BODY

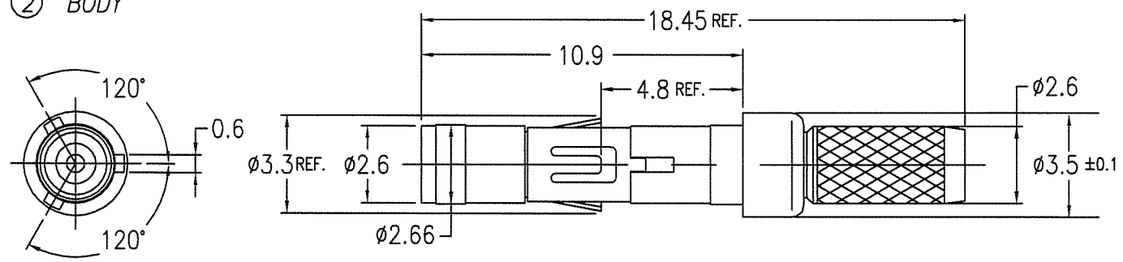

③ CRIMP SLEEVE

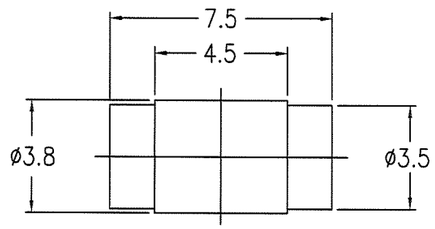

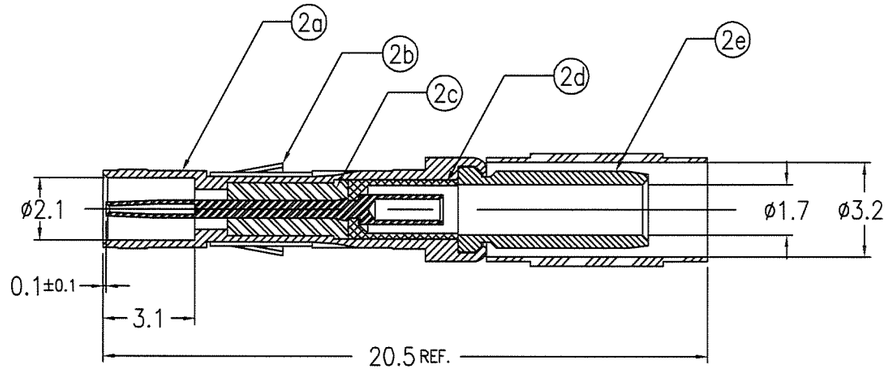

AFTER ASSY

No.	DESCRIPTION	MATERIAL	PLATING
①	INNER CONTACT	BERYLLIUM COPPER	Au 0.8um MIN.
②	BODY		
2a	SHELL	BRASS	Au 0.8um MIN.
2b	SPRING CLIP	BERYLLIUM COPPER	Ni 1.27um MIN.
2c	FRONT INSULATOR	PTFE	
2d	REAR INSULATOR	PTFE	
2e	FERRULE	BRASS	Au 0.05um MIN.
③	CRIMP SLEEVE	BRASS	Ni 1.27um MIN.

NOTES

1. PULL OUT FOR OF CENTER CONTACT
   MUST BE 0.2N MIN. / 0.8N MAX.
2. ASSEMBLE PRODUCT WITH TOOL HT430
   USE INSERTS EPL 193460-001
3. FOR LEAD FREE P/N, THE PRODUCT MEET EUROPEAN UNION DIRECTIVES
   AND OTHER COUNTRY REGULATIONS AS DESCRIBED IN GS-22-008
4. THE PRODUCT IS NOT INTENDED TO BE EXPOSED TO A MANUFACTURING SOLDER PROCESS.

ltr	description	ecn no	dr	date
A	RELEASED	J03-0172	Y.K	4/10/'03
B	REVISED	J05-0670	T.S	10/21/'05
C	REVISED	J07-0039	S.O	1/22/'07

mat'l. code: ---

surface: ISO 1302

tolerance: ISO 406, ISO 1101

tolerances unless otherwise specified: angles 0°±3°; linear 0.X ±0.2, 0.XX ±0.2, 0.XXX ±0.2

projection

MM

scale 5:1

dr	Y.KODAIRA	4/10/'03
engr	S.OKUDAIRA	1/22/'07
chr	R. Stroyi	1/22/07
appd	S. Okudaira	1/22/07

product family: METRAL

CODE JP

title: METRAL MINICOAX CONTACT KIT FEMALE SOLDER-TO-WIRE

dwg no: 62435

sheet 8 of

size: A3

type: Customer Drawing

Rev. C

sheet index | revision sheet

form: A3

FCIconnect.com
Copyright FCI.

Компания «ЭлектроПласт» предлагает заключение долгосрочных отношений при поставках импортных электронных компонентов на взаимовыгодных условиях!

Наши преимущества:

- Оперативные поставки широкого спектра электронных компонентов отечественного и импортного производства напрямую от производителей и с крупнейших мировых складов;
- Поставка более 17-ти миллионов наименований электронных компонентов;
- Поставка сложных, дефицитных, либо снятых с производства позиций;
- Оперативные сроки поставки под заказ (от 5 рабочих дней);
- Экспресс доставка в любую точку России;
- Техническая поддержка проекта, помощь в подборе аналогов, поставка прототипов;
- Система менеджмента качества сертифицирована по Международному стандарту ISO 9001;
- Лицензия ФСБ на осуществление работ с использованием сведений, составляющих государственную тайну;
- Поставка специализированных компонентов (Xilinx, Altera, Analog Devices, Intersil, Interpoint, Microsemi, Aeroflex, Peregrine, Syfer, Eurofarad, Texas Instrument, Miteq, Cobham, E2V, MA-COM, Hittite, Mini-Circuits,General Dynamics и др.);

Помимо этого, одним из направлений компании «ЭлектроПласт» является направление «Источники питания». Мы предлагаем Вам помощь Конструкторского отдела:

- Подбор оптимального решения, техническое обоснование при выборе компонента;
- Подбор аналогов;
- Консультации по применению компонента;
- Поставка образцов и прототипов;
- Техническая поддержка проекта;
- Защита от снятия компонента с производства.

Как с нами связаться

Телефон: 8 (812) 309 58 32 (многоканальный)
Факс: 8 (812) 320-02-42
Электронная почта: org@eplast1.ru
Адрес: 198099, г. Санкт-Петербург, ул. Калинина, дом 2, корпус 4, литера А.