THIS DRAWING IS UNPUBLISHED. RELEASED FOR PUBLICATION 20
© COPYRIGHT 20 BY - ALL RIGHTS RESERVED.

LOC	DIST
ES	00

REVISIONS

P	LTR	DESCRIPTION	DATE	DWN	APVD
	L	ADDED NEW DASH NUMBER	23AUG2013	CZ	SZ
	L1	REV PER ECR-13-014402	13SEP2013	CZ	SZ

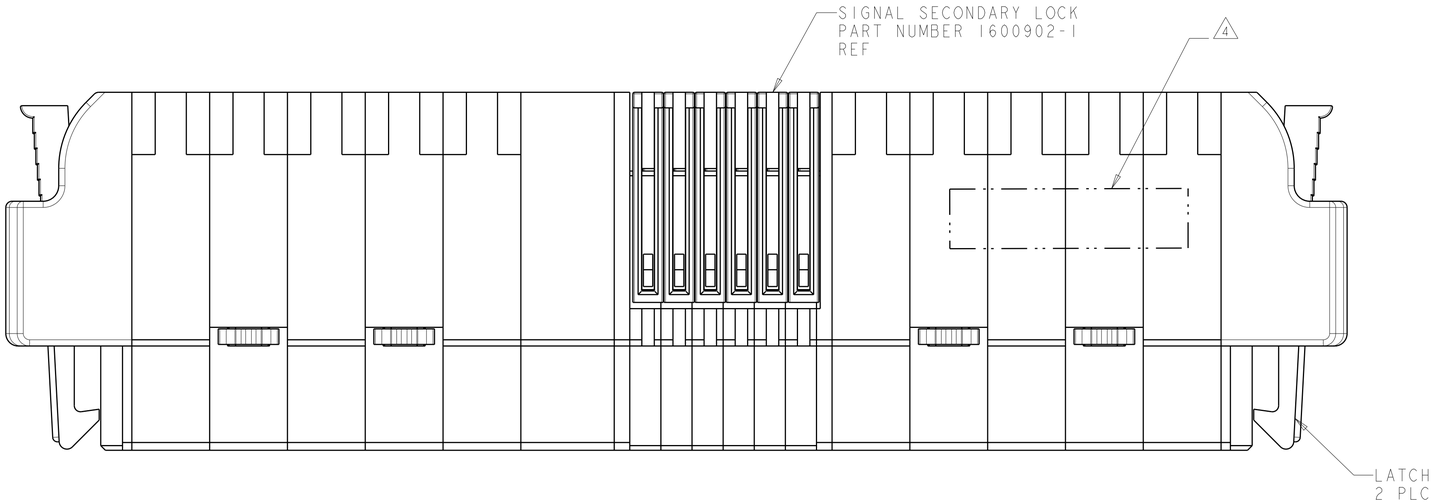

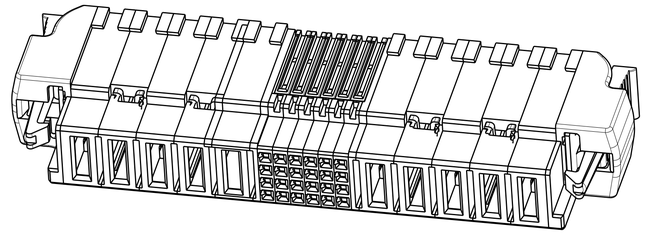

ISOMETRIC VIEW WITHOUT
OPTIONAL CENTER MODULE
SCALE 2:1

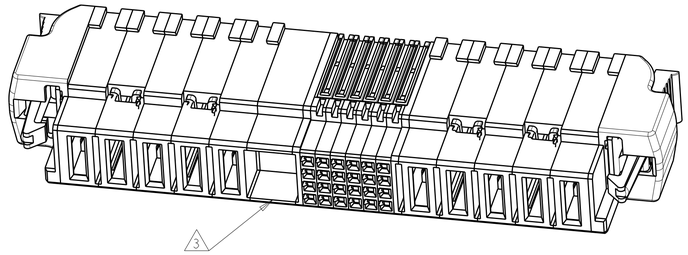

ISOMETRIC VIEW WITH
OPTIONAL CENTER MODULE
SCALE 2:1

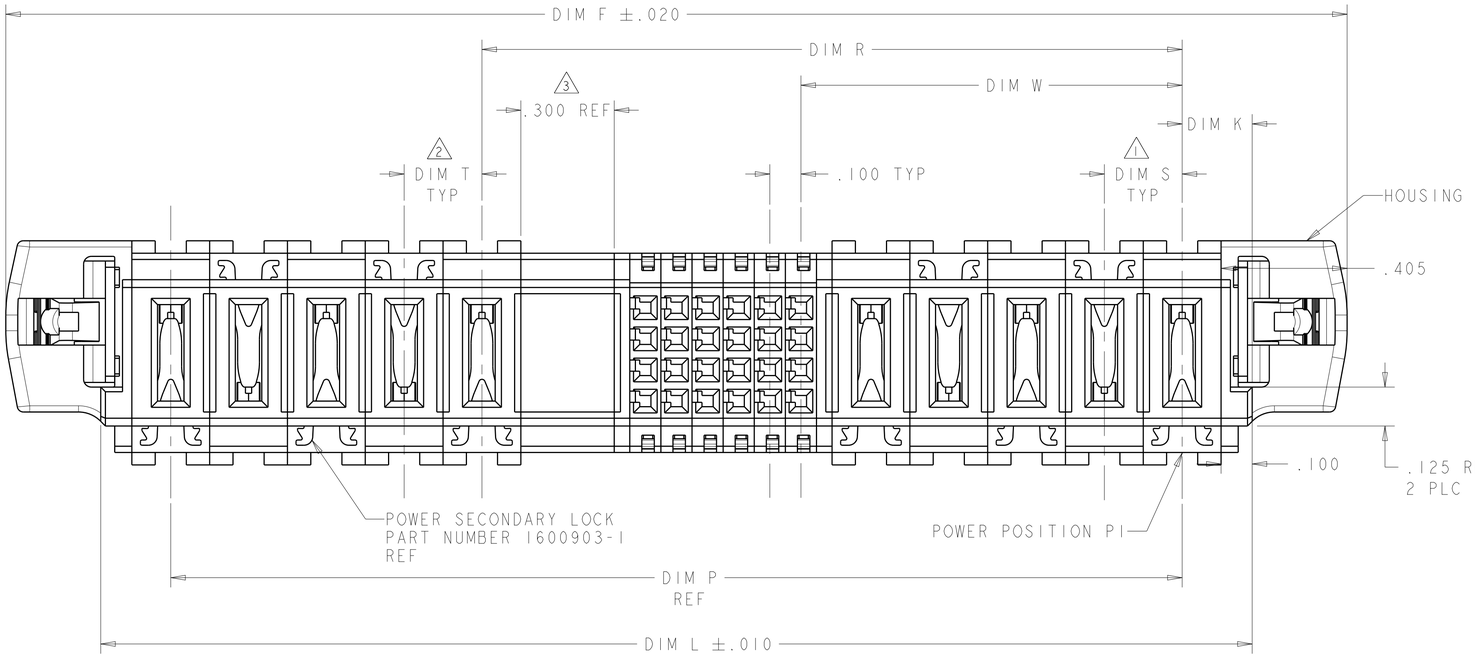

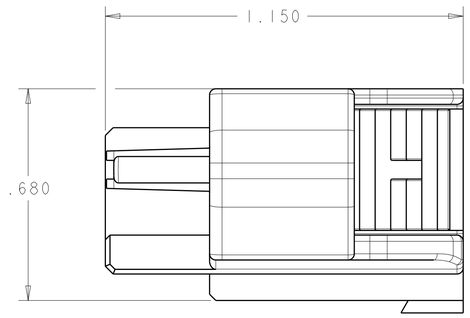

1. DIM S IS CENTERLINE SPACING OF POWER MODULE ON RIGHT SIDE OF HOUSING.
2. DIM T IS CENTERLINE SPACING OF POWER MODULE ON LEFT SIDE OF HOUSING.
3. OPTIONAL CENTER MODULE
4. COMPANY TRADEMARK, PART NUMBER, AND DATE CODE TO BE MARKED IN APPROX AREA SHOWN. PARTS UNDER 2.00 LONG MAY BE MARKED ON BOTH SIDES.
5. THERMO PLASTIC, UL94 V-0,BLACK
6. VARIABLE DIMENSIONS SHOWN ON VIEW (SHEET 2).
7. NOT RELEASED FOR PRODUCTION.
8. DIMENSIONS FOR CONFIGURATION "S" PLEASE REFER TO SHEET 3.
9. THE CONFIGURATION WITH VENT, PLEASE REFER TO SHEET 2.

THIS DRAWING IS A CONTROLLED DOCUMENT.

DIMENSIONS: INCHES

TOLERANCES UNLESS OTHERWISE SPECIFIED:
0 PLC ±-
1 PLC ±-
2 PLC ±0.01
3 PLC ±0.005
4 PLC ±0.0020
ANGLES ±2°

MATERIAL 5
FINISH -

DWN R.GRZYBOWSKI 10MAY05
CHK P.DAMATO 10MAY05
APVD P.DAMATO 10MAY05
PRODUCT SPEC 108-2157
APPLICATION SPEC 114-13112
WEIGHT -

TE Connectivity

NAME SQUEEZE TO RELEASE CABLE RECEPTACLE ASSEMBLY W/ LATCHES AND KEY, MULTI-BEAM XLE

SIZE	CAGE CODE	DRAWING NO	RESTRICTED TO
A1	00779	C-1600788	-

Customer Drawing SCALE 4:1 SHEET 1 OF 6 REV L1

4805 (3/11)

THIS DRAWING IS UNPUBLISHED. RELEASED FOR PUBLICATION 20
© COPYRIGHT 20 BY - ALL RIGHTS RESERVED.

LOC	DIST
ES	00

REVISIONS

P	LTR	DESCRIPTION	DATE	DWN	APVD
	-	SEE SHEET 1	-	-	-

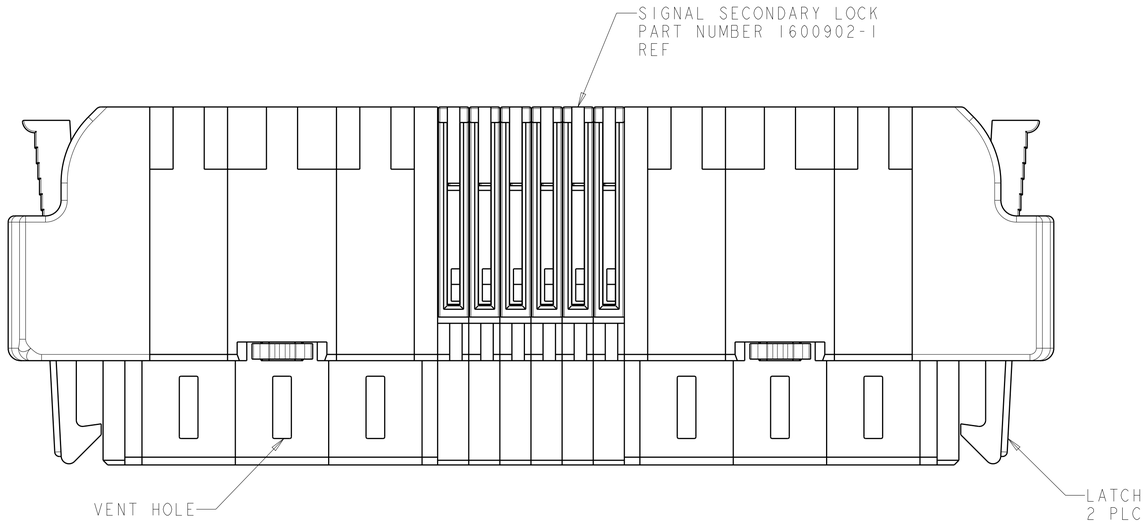

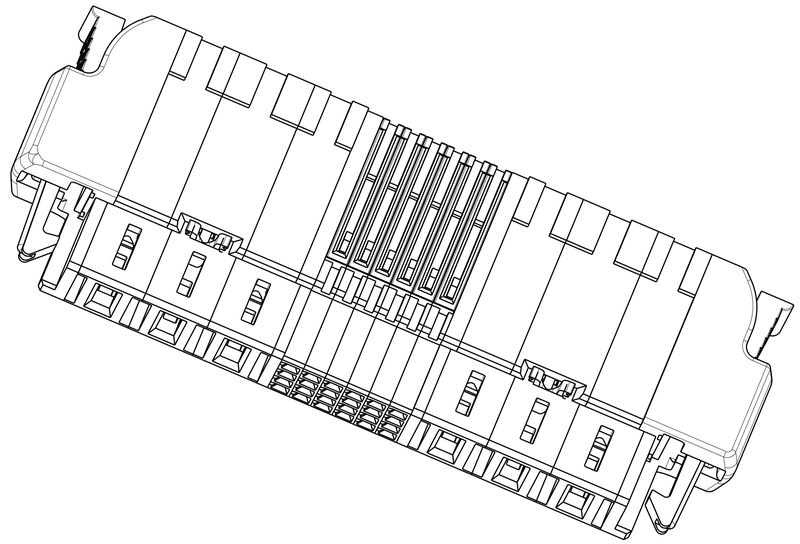

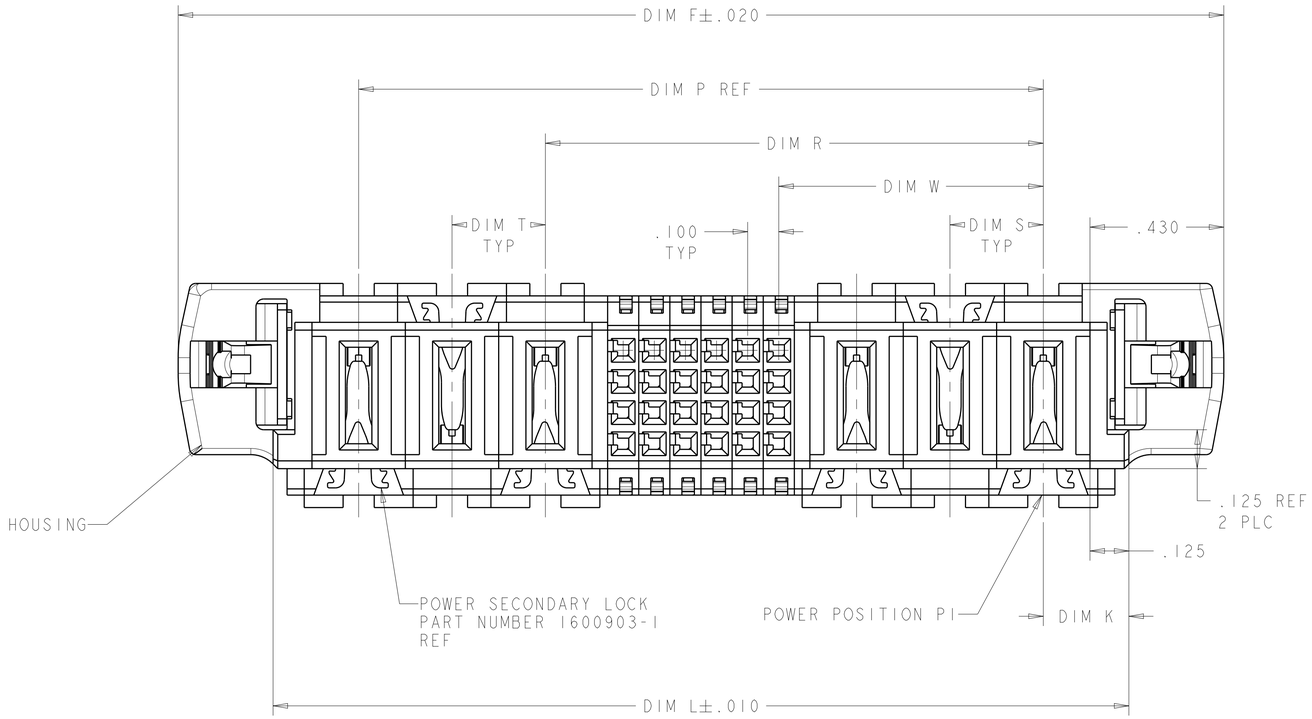

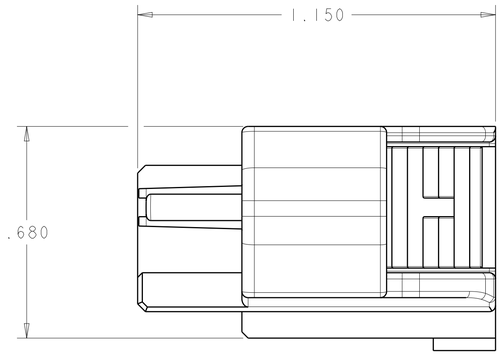

K2 9 THE CONFIGURATION WITH VENT HOLES
PART NO.: 2-1600788-6

THIS DRAWING IS A CONTROLLED DOCUMENT.

DIMENSIONS: INCHES

TOLERANCES UNLESS OTHERWISE SPECIFIED:
0 PLC ±-
1 PLC ±-
2 PLC ±0.01
3 PLC ±0.005
4 PLC ±0.0020
ANGLES ±2°

MATERIAL - -
FINISH - -

DWN R.GRZYBOWSKI 10MAY05
CHK P.DAMATO 10MAY05
APVD P.DAMATO 10MAY05
PRODUCT SPEC 108-2157
APPLICATION SPEC 114-13112
WEIGHT -

TE Connectivity

NAME SQUEEZE TO RELEASE CABLE RECEPTACLE ASSEMBLY W/ LATCHES AND KEY, MULTI-BEAM XLE

SIZE	CAGE CODE	DRAWING NO	RESTRICTED TO
A1	00779	C-1600788	-

Customer Drawing | SCALE 4:1 | SHEET 2 OF 6 | REV L1

4805 (3/11)

THIS DRAWING IS UNPUBLISHED. RELEASED FOR PUBLICATION 20
© COPYRIGHT 20 BY - ALL RIGHTS RESERVED.

LOC	DIST
ES	00

REVISIONS

P	LTR	DESCRIPTION	DATE	DWN	APVD
	-	SEE SHEET 1	-	-	-

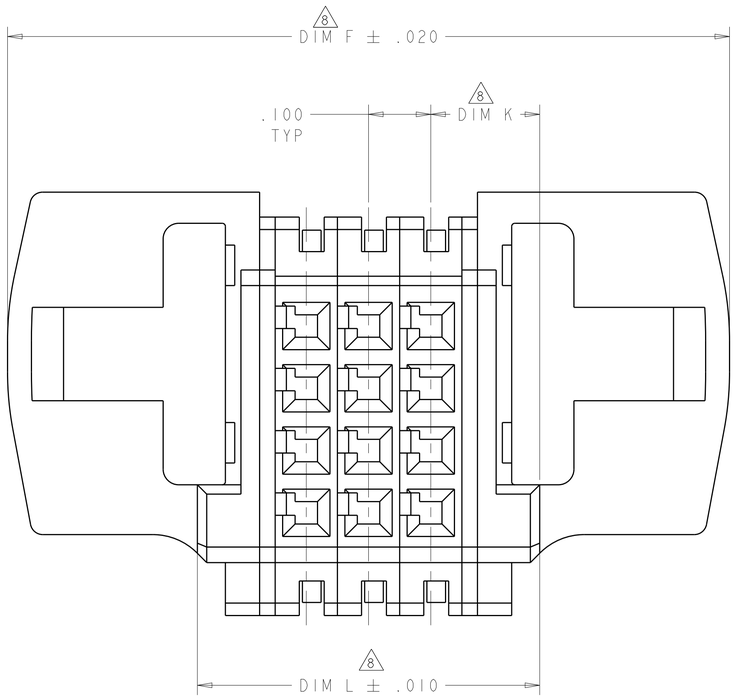

FOR CONFIGURATION "S"
PART 2-1600788-7

	CENTER MODULE	DIM P	DIM W	DIM T	DIM S	DIM R	DIM L	DIM K	DIM F	DESCRIPTION	PART NUMBER
L	NO	2.050	.475	.250	.250	1.800	2.500	.225	3.110	2P + 48S + 2P	3-1600788-6
	NO	1.250	.475	.250	.250	1.000	1.700	.225	2.310	2P + 16S + 2P	3-1600788-5
	NO	.500	.200	-	-	.500	.900	.200	1.510	1HDP + 8S + 1HDP	3-1600788-4
	NO	.700	.200	-	-	.700	1.100	.200	1.710	1HDP + 16S + 1HDP	3-1600788-3
	NO	-	-	-	-		1.325	.200	1.310	16S 8	3-1600788-1
	NO	-	-	-	-	-	1.825	.175	2.435	64S 8	3-1600788-0
	NO	-	-	-	-	-	1.200	.200	1.810	36S 8	2-1600788-9
	NO	1.400	.250	.300	.300	1.400	1.950	.275	2.560	1P + 40S + 1P	2-1600788-8 9
	NO	-	-	-	-	-	.550	.175	1.160	12S 8	2-1600788-7
	NO	2.200	.850	.300	.300	1.600	2.750	.275	3.360	3ACP + 24S + 3ACP	2-1600788-6 9
	NO	1.100	.500	.300	.300	.800	1.600	.250	2.210	2ACP + 8S + 2ACP	2-1600788-5
	NO	.450	.225	-	-	.450	.900	.225	1.510	1P + 4S + 1P	2-1600788-4
	NO	2.400	.850	.300	.300	1.800	2.950	.275	3.560	3ACP + 32S + 3ACP	2-1600788-3
	NO	1.600	.550	.300	.300	1.300	2.150	.275	2.760	2ACP + 24S + 2ACP	2-1600788-0
	NO	2.200	.850	.300	.300	1.600	2.750	.275	3.360	3ACP + 24S + 3ACP	1-1600788-9
	NO	3.450	1.475	.250	.250	2.200	3.900	.225	4.510	6P + 24S + 6P	1-1600788-7
	NO	-	-	-	-	-	2.000	.200	2.610	0P + 68S + 0P 8	1-1600788-6
	NO	2.800	1.150	.300	.300	1.900	3.350	.275 7	3.960	4ACP + 24S + 4ACP	1-1600788-5
	NO	2.450	.975	.250	.250	1.700	2.900	.225	3.510	4P + 24S + 4P	1-1600788-4
	NO	1.050	.475	.250	.250	.800	1.500	.225	2.110	2P + 8S + 2P	1-1600788-3
	NO	2.200	.850	.300	.300	1.600	2.750	.275	3.360	3ACP + 24S + 3ACP	1-1600788-2
	NO	1.250	.475	.250	.250	1.000	1.700	.225	2.310	2P + 16S + 2P	1-1600788-0
	NO	1.550	.725	.250	.250	1.050	2.000	.225	2.610	3P + 8S + 3P	1600788-9
	NO	.950	.225	-	-	.950	1.400	.225	2.010	1P + 24S + 1P	1600788-8
	NO	3.975	1.650	6	6	2.575	4.475	.225	5.085	6P + 32S + 6P	1600788-7
	NO	2.750	1.475	.250	.250	2.500	3.200	.225	3.810	6P + 36S + 2P	1600788-4
	NO	4.625	1.150	.250	.300	1.875	5.125	.275	5.735	4ACP + 24S + 12P	1600788-3
7	NO	2.650	.975	.250	.250	1.900	3.100	.225	3.710	4P + 32S + 4P	1600788-2
	NO	1.450	.475	.250	.250	1.200	1.900	.225	2.510	2P + 24S + 2P	1600788-1

THIS DRAWING IS A CONTROLLED DOCUMENT.

DIMENSIONS: INCHES

TOLERANCES UNLESS OTHERWISE SPECIFIED:
0 PLC ±-
1 PLC ±-
2 PLC ±0.01
3 PLC ±0.005
4 PLC ±0.0020
ANGLES ±2°

MATERIAL - -
FINISH - -

DWN R.GRZYBOWSKI 10MAY05
CHK P.DAMATO 10MAY05
APVD P.DAMATO 10MAY05

PRODUCT SPEC 108-2157
APPLICATION SPEC 114-13112
WEIGHT -

TE Connectivity

NAME SQUEEZE TO RELEASE CABLE RECEPTACLE ASSEMBLY W/ LATCHES AND KEY, MULTI-BEAM XLE

SIZE	CAGE CODE	DRAWING NO	RESTRICTED TO
A1	00779	C-1600788	-

Customer Drawing | SCALE 4:1 | SHEET 3 OF 6 | REV L1

4805 (3/11)

THIS DRAWING IS UNPUBLISHED. RELEASED FOR PUBLICATION 20
© COPYRIGHT 20 BY - ALL RIGHTS RESERVED.

LOC	DIST
ES	00

REVISIONS

P	LTR	DESCRIPTION	DATE	DWN	APVD
	-	SEE SHEET 1	-	-	-

PART NUMBER	ROWS
1600788-1	D C B A

POWER (L)		SIGNAL						POWER (R)	
P4	P3	6	5	4	3	2	1	P2	P1
RM	RM	E	E	E	E	E	E	RA	RA
		E	E	E	E	E	E		
		E	E	E	E	E	E		
		E	E	E	E	E	E		

2P + 24S + 2P

PART NUMBER	ROWS
1600788-2	D C B A

POWER (L)				SIGNAL								POWER (R)			
P8	P7	P6	P5	8	7	6	5	4	3	2	1	P4	P3	P2	P1
RM	RM	RM	RM	E	E	E	E	E	E	E	E	RM	RM	RM	RM
				E	E	E	E	E	E	E	E				
				E	E	E	E	E	E	E	E				
				E	E	E	E	E	E	E	E				

4P + 32S + 4P

PART NUMBER	ROWS
1600788-3	D C B A

POWER (L)												SIGNAL						POWER (R)			
P16	P15	P14	P13	P12	P11	P10	P9	P8	P7	P6	P5	6	5	4	3	2	1	P4	P3	P2	P1
RA	RM	RA	RM	RA	RM	RA	RM	RA	RM	RA	RM	E	E	E	E	E	E	RA	RM	RA	RM
												E	E	E	E	E	E				
												E	E	E	E	E	E				
												E	E	E	E	E	E				

4ACP + 24S + 12P

PART NUMBER	ROWS
1600788-4	D C B A

POWER (L)		SIGNAL									POWER (R)						
P8	P7	9	8	7	6	5	4	3	2	1	P6	P5	P4	P3	P2	P1	
RM	RM	E	E	E	E	E	E	E	E	E	RM	RM	RM	RM	RM	RM	
		E	E	E	E	E	E	E	E	E							
		E	E	E	E	E	E	E	E	E							
		E	E	E	E	E	E	E	E	E							

6P + 36S + 2P

PART NUMBER	ROWS
1600788-7	D C B A

POWER (L)						SIGNAL								POWER (R)					
P12	P11	P10	*P9*	P8	P7	8	7	6	5	4	3	2	1	*P6*	P5	P4	*P3*	P2	P1
RM	RM	RM	RM	RM	RM	E	E	E	E	E	E	E	E	RM	RM	RM	RM	RM	RM
						E	E	E	E	E	E	E	E						
						E	E	E	E	E	E	E	E						
						E	E	E	E	E	E	E	E						

6P + 32S + 6P

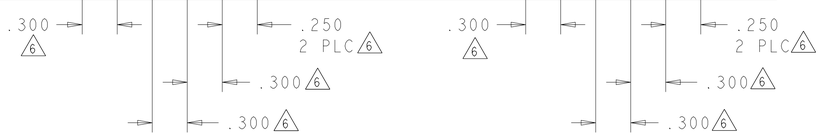

PART NUMBER	ROWS
1600788-8	D C B A

P (L)	SIGNAL						P (R)
P2	6	5	4	3	2	1	P1
RM	E	E	E	E	E	E	RM
	E	E	E	E	E	E	
	E	E	E	E	E	E	
	E	E	E	E	E	E	

1P + 24S + 1P

PART NUMBER	ROWS
1-1600788-0	D C B A

POWER (L)		SIGNAL				POWER (R)	
P4	P3	4	3	2	1	P2	P1
RM	RM	E	E	E	E	RA	RA
		E	E	E	E		
		E	E	E	E		
		E	E	E	E		

2P + 16S + 2P

PART NUMBER	ROWS
1-1600788-2	D C B A

POWER (L)			SIGNAL						POWER (R)		
P6	P5	P4	6	5	4	3	2	1	P3	P2	P1
RM	RM	RM	E	E	E	E	E	E	RM	RM	RM
			E	E	E	E	E	E			
			E	E	E	E	E	E			
			E	E	E	E	E	E			

3ACP + 24S + 3ACP

PART NUMBER	ROWS
1-1600788-3	D C B A

POWER (L)		SIGNAL		POWER (R)	
P4	P3	2	1	P2	P1
RM	RM	E	E	RA	RM
		E	E		
		E	E		
		E	E		

2P + 8S + 2P

REFERENCE WIRE CHART AND CONTACTS		
HOUSING MODULE	CONTACT	INSULATION DIAMETER RANGE
.300 POWER	8 - 10 REF 1600960	[.176 - .272]
.250 POWER	8 - 10 REF 1600960	[.176 - .203]
	12 - 14 REF 1600961	[.156 - .176]
.200 POWER	12 - 14 REF 1600961	[.120 - .156]
.100 SIGNAL	22 - 26 REF 5531216-5	[.036 - .069]

POWER CONTACT, STD	RM
POWER CONTACT, MFBL	RA
SIGNAL CONTACT	E
DESCRIPTION	CODE

CODES

THIS DRAWING IS A CONTROLLED DOCUMENT.

DIMENSIONS: INCHES

TOLERANCES UNLESS OTHERWISE SPECIFIED:
0 PLC ±-
1 PLC ±-
2 PLC ±0.01
3 PLC ±0.005
4 PLC ±0.0020
ANGLES ±2°

MATERIAL - -
FINISH - -

DWN R.GRZYBOWSKI 10MAY05
CHK P.DAMATO 10MAY05
APVD P.DAMATO 10MAY05
PRODUCT SPEC 108-2157
APPLICATION SPEC 114-13112
WEIGHT -

TE Connectivity

NAME SQUEEZE TO RELEASE CABLE RECEPTACLE ASSEMBLY W/ LATCHES AND KEY, MULTI-BEAM XLE

SIZE	CAGE CODE	DRAWING NO	RESTRICTED TO
A1	00779	C-1600788	-

Customer Drawing

SCALE	SHEET	OF	REV
4:1	4	6	L1

THIS DRAWING IS UNPUBLISHED. RELEASED FOR PUBLICATION 20
© COPYRIGHT 20 BY - ALL RIGHTS RESERVED.

LOC	DIST
ES	00

REVISIONS

P	LTR	DESCRIPTION	DATE	DWN	APVD
	-	SEE SHEET 1	-	-	-

PART NUMBER	ROWS	POWER (L)				SIGNAL						POWER (R)			
		P8	P7	P6	P5	6	5	4	3	2	1	P4	P3	P2	P1
1-1600788-4	D	RM	RM	RM	RM	E	E	E	E	E	E	RM	RM	RM	RM
	C					E	E	E	E	E	E				
	B					E	E	E	E	E	E				
	A					E	E	E	E	E	E				
4P + 24S + 4P															

PART NUMBER	ROWS	POWER (L)				SIGNAL						POWER (R)			
		P8	P7	P6	P5	6	5	4	3	2	1	P4	P3	P2	P1
1-1600788-5	D	RM	RM	RM	RM	E	E	E	E	E	E	RM	RM	RM	RM
	C					E	E	E	E	E	E				
	B					E	E	E	E	E	E				
	A					E	E	E	E	E	E				
4ACP + 24S + 4ACP															

PART NUMBER	ROWS	SIGNAL															
		17	16	15	14	13	12	11	10	9	8	7	6	5	4	3	2	1
1-1600788-6	D	E	E	E	E	E	E	E	E	E	E	E	E	E	E	E	E	E
	C	E	E	E	E	E	E	E	E	E	E	E	E	E	E	E	E	E
	B	E	E	E	E	E	E	E	E	E	E	E	E	E	E	E	E	E
	A	E	E	E	E	E	E	E	E	E	E	E	E	E	E	E	E	E
0P + 68S + 0P																		

PART NUMBER	ROWS	POWER (L)			SIGNAL						POWER (R)					
		P6	P5	P4	6	5	4	3	2	1	P3	P2	P1
1600788-9	D	RM	RM	RM	E	E					RM	RM	RM
	C				E	E							
	B				E	E							
	A				E	E							
3P + 8S + 3P													

PART NUMBER	ROWS	POWER			SIGNAL								POWER		
		P6	P5	P4	8	7	6	5	4	3	2	1	P3	P2	P1
2-1600788-3	D	RM	RM	RM	E	E	E	E	E	E	E	E	RM	RM	RM
	C				E	E	E	E	E	E	E	E			
	B				E	E	E	E	E	E	E	E			
	A				E	E	E	E	E	E	E	E			
3ACP+32S+3ACP															

PART NUMBER	ROWS	P (L)	SIGNAL	P (R)
		P2	1	P1
2-1600788-4	D	RM	E	RM
	C		E	
	B		E	
	A		E	
1P + 4S + 1P				

PART NUMBER	ROWS	POWER (L)		SIGNAL		POWER (R)	
		P4	P3	2	1	P2	P1
2-1600788-5	D	RA	RA	E	E	RA	RA
	C			E	E		
	B			E	E		
	A			E	E		
2ACP + 8S + 2ACP							

PART NUMBER	ROWS	POWER (L)			SIGNAL						POWER (R)					
		P12	P11	P10	P9	P8	P7	6	5	4	3	2	1	P6	P5	P4	P3	P2	P1
1-1600788-7	D	RM	RM	RM	RM	RM	RM	E	E	E	E	E	E	RM	RM	RM	RM	RM	RM
	C							E	E	E	E	E	E						
	B							E	E	E	E	E	E						
	A							E	E	E	E	E	E						
6P + 24S + 6P																			

(K3)

PART NUMBER	ROWS	POWER (L)			SIGNAL						POWER (R)		
		P6	P5	P4	6	5	4	3	2	1	P3	P2	P1
2-1600788-6	D	RA	RM	RM	E	E	E	E	E	E	RM	RA	RA
	C				E	E	E	E	E	E			
	B				E	E	E	E	E	E			
	A				E	E	E	E	E	E			
3ACP + 24S + 3ACP													

(J)

PART NUMBER	ROWS	POWER (L)			SIGNAL						POWER (R)		
		P6	P5	P4	6	5	4	3	2	1	P3	P2	P1
1-1600788-9	D	RM	RM	RM	E	E	E	E	E	E	RM	RM	RM
	C				E	E	E	E	E	E			
	B				E	E	E	E	E	E			
	A				E	E	E	E	E	E			
3ACP + 24S + 3ACP													

(K1)

PART NUMBER	ROWS	SIGNAL		
		3	2	1
2-1600788-7	D	E	E	E
	C	E	E	E
	B	E	E	E
	A	E	E	E
12S				

PART NUMBER	ROWS	SIGNAL								
		9	8	7	6	5	4	3	2	1
2-1600788-9	D	E	E	E	E	E	E	E	E	E
	C	E	E	E	E	E	E	E	E	E
	B	E	E	E	E	E	E	E	E	E
	A	E	E	E	E	E	E	E	E	E
0P + 36S + 0P										

(H3)

PART NUMBER	ROWS	POWER		SIGNAL						POWER	
		P4	P3	6	5	4	3	2	1	P2	P1
2-1600788-0	D	RM	RM	E	E	E	E	E	E	RM	RM
	C			E	E	E	E	E	E		
	B			E	E	E	E	E	E		
	A			E	E	E	E	E	E		
2ACP+24S+2ACP											

(K5)

PART NUMBER	ROWS	SIGNAL															
		16	15	14	13	12	11	10	9	8	7	6	5	4	3	2	1
3-1600788-0	D	E	E	E	E	E	E	E	E	E	E	E	E	E	E	E	E
	C	E	E	E	E	E	E	E	E	E	E	E	E	E	E	E	E
	B	E	E	E	E	E	E	E	E	E	E	E	E	E	E	E	E
	A	E	E	E	E	E	E	E	E	E	E	E	E	E	E	E	E
64S																	

THIS DRAWING IS A CONTROLLED DOCUMENT.

DIMENSIONS: INCHES

TOLERANCES UNLESS OTHERWISE SPECIFIED:
0 PLC ±-
1 PLC ±-
2 PLC ±0.01
3 PLC ±0.005
4 PLC ±0.0020
ANGLES ±2°

MATERIAL - -
FINISH - -

DWN R.GRZYBOWSKI 10MAY05
CHK P.DAMATO 10MAY05
APVD P.DAMATO 10MAY05

PRODUCT SPEC 108-2157
APPLICATION SPEC 114-13112
WEIGHT -

TE Connectivity

NAME SQUEEZE TO RELEASE CABLE RECEPTACLE ASSEMBLY W/ LATCHES AND KEY, MULTI-BEAM XLE

SIZE	CAGE CODE	DRAWING NO	RESTRICTED TO
A1	00779	C-1600788	-

Customer Drawing

SCALE	SHEET	OF	REV
4:1	5	6	L1

THIS DRAWING IS UNPUBLISHED. RELEASED FOR PUBLICATION 20
© COPYRIGHT 20 BY - ALL RIGHTS RESERVED.

LOC	DIST
ES	00

REVISIONS

P	LTR	DESCRIPTION	DATE	DWN	APVD
	-	SEE SHEET 1	-	-	-

PART NUMBER	ROWS		SIGNAL 4	3	2	1	
3-1600788-1	D		E	E	E	E	
	C		E	E	E	E	
	B		E	E	E	E	
	A		E	E	E	E	
0P + 16S + 0P							

PART NUMBER	ROWS		POWER (L) P4	P3	SIGNAL 4	3	2	1	POWER (R) P2	P1	
3-1600788-5	D		RM	RA					RA	RM	
	C				E	E	E	E			
	B										
	A				E	E	E	E			
2P + 16S + 2P											

NO CONTACTS LOADED FOR ROW B AND D

PART NUMBER	ROWS		PL P2	SIGNAL 10	9	8	7	6	5	4	3	2	1	PR P1	
2-1600788-8	D		RM	E	E	E	E	E	E	E	E	E	E	RM	
	C			E	E	E	E	E	E	E	E	E	E		
	B			E	E	E	E	E	E	E	E	E	E		
	A			E	E	E	E	E	E	E	E	E	E		
2P+40S+1P															

PART NUMBER	ROWS		POWER P4	P3	SIGNAL 12	11	10	9	8	7	6	5	4	3	2	1	POWER P2	P1	
3-1600788-6	D		RM	RM	E	E	E	E	E	E	E	E	E	E	E	E	RM	RM	
	C				E	E	E	E	E	E	E	E	E	E	E	E			
	B				E	E	E	E	E	E	E	E	E	E	E	E			
	A				E	E	E	E	E	E	E	E	E	E	E	E			
2P+24S+2P																			

PART NUMBER	ROWS		P(L) P2	SIGNAL 4	3	2	1	P(R) P1	
3-1600788-3	D		RA	E	E	E	E	RM	
	C			E	E	E	E		
	B			E	E	E	E		
	A			E	E	E	E		
1HDP + 16S + 1HDP									

PART NUMBER	ROWS		PL P2	SIGNAL 2	1	PR P1	
3-1600788-4	D		RM	E	E	RM	
	C			E	E		
	B			E	E		
	A			E	E		
1P + 8S + 1P							

THIS DRAWING IS A CONTROLLED DOCUMENT.

DIMENSIONS: INCHES

TOLERANCES UNLESS OTHERWISE SPECIFIED:
0 PLC ±-
1 PLC ±-
2 PLC ±0.01
3 PLC ±0.005
4 PLC ±0.0020
ANGLES ±2°

MATERIAL - -
FINISH - -

DWN R.GRZYBOWSKI 10MAY05
CHK P.DAMATO 10MAY05
APVD P.DAMATO 10MAY05

PRODUCT SPEC 108-2157
APPLICATION SPEC 114-13112
WEIGHT -

TE Connectivity

NAME SQUEEZE TO RELEASE CABLE RECEPTACLE ASSEMBLY W/ LATCHES AND KEY, MULTI-BEAM XLE

SIZE	CAGE CODE	DRAWING NO	RESTRICTED TO
A1	00779	C-1600788	-

Customer Drawing

SCALE	SHEET	OF	REV
4:1	6	6	L1

Компания «ЭлектроПласт» предлагает заключение долгосрочных отношений при поставках импортных электронных компонентов на взаимовыгодных условиях!

Наши преимущества:

- Оперативные поставки широкого спектра электронных компонентов отечественного и импортного производства напрямую от производителей и с крупнейших мировых складов;
- Поставка более 17-ти миллионов наименований электронных компонентов;
- Поставка сложных, дефицитных, либо снятых с производства позиций;
- Оперативные сроки поставки под заказ (от 5 рабочих дней);
- Экспресс доставка в любую точку России;
- Техническая поддержка проекта, помощь в подборе аналогов, поставка прототипов;
- Система менеджмента качества сертифицирована по Международному стандарту ISO 9001;
- Лицензия ФСБ на осуществление работ с использованием сведений, составляющих государственную тайну;
- Поставка специализированных компонентов (Xilinx, Altera, Analog Devices, Intersil, Interpoint, Microsemi, Aeroflex, Peregrine, Syfer, Eurofarad, Texas Instrument, Miteq, Cobham, E2V, MA-COM, Hittite, Mini-Circuits,General Dynamics и др.);

Помимо этого, одним из направлений компании «ЭлектроПласт» является направление «Источники питания». Мы предлагаем Вам помощь Конструкторского отдела:

- Подбор оптимального решения, техническое обоснование при выборе компонента;
- Подбор аналогов;
- Консультации по применению компонента;
- Поставка образцов и прототипов;
- Техническая поддержка проекта;
- Защита от снятия компонента с производства.

Как с нами связаться

Телефон: 8 (812) 309 58 32 (многоканальный)
Факс: 8 (812) 320-02-42
Электронная почта: org@eplast1.ru
Адрес: 198099, г. Санкт-Петербург, ул. Калинина, дом 2, корпус 4, литера А.