MAX5033

500mA, 76V, High-Efficiency, MAXPower Step-Down DC-DC Converter

General Description

The MAX5033 easy-to-use, high-efficiency, high-voltage, step-down DC-DC converter operates from an input voltage up to 76V and consumes only 270µA quiescent current at no load. This pulse-width modulated (PWM) converter operates at a fixed 125kHz switching frequency at heavy loads, and automatically switches to pulseskipping mode to provide low quiescent current and high efficiency at light loads. The MAX5033 includes internal frequency compensation simplifying circuit implementation. The device uses an internal low-onresistance, high-voltage, DMOS transistor to obtain high efficiency and reduce overall system cost. This device includes undervoltage lockout, cycle-by-cycle current limit, hiccup-mode output short-circuit protection, and thermal shutdown.

The MAX5033 delivers up to 500mA output current. The output current may be limited by the maximum power dissipation capability of the package. External shutdown is included, featuring 10µA (typ) shutdown current. The MAX5033A/B/C versions have fixed output voltages of 3.3V, 5V, and 12V, respectively, while the MAX5033D features an adjustable output voltage, from 1.25V to 13.2V.

The MAX5033 is available in space-saving 8-pin SO and 8-pin plastic DIP packages and operates over the automotive (-40°C to +125°C) temperature range.

Applications

- Consumer Electronics
- Industrial
- Distributed Power

Typical Application Circuit

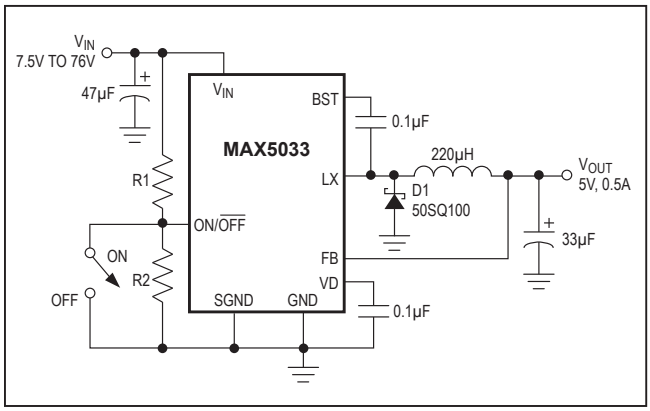

Features

- Wide 7.5V to 76V Input Voltage Range
- Fixed (3.3V, 5V, 12V) and Adjustable (1.25V to 13.2V) Voltage Versions
- 500mA Output Current
- Efficiency Up to 94%
- Internal 0.4Ω High-Side DMOS FET
- 270µA Quiescent Current at No Load, 10µA Shutdown Current
- Internal Frequency Compensation
- Fixed 125kHz Switching Frequency
- Thermal Shutdown and Short-Circuit Current Limit
- 8-Pin SO and PDIP Packages

Ordering Information

PART	TEMP RANGE	PIN-PACKAGE	OUTPUT VOLTAGE (V)
MAX5033AUSA	0°C to +85°C	8 SO	3.3
MAX5033AUPA	0°C to +85°C	8 PDIP	
MAX5033AASA	-40°C to +125°C	8 SO	
MAX5033BUSA	0°C to +85°C	8 SO	5.0
MAX5033BUPA	0°C to +85°C	8 PDIP	
MAX5033BASA	-40°C to +125°C	8 SO	
MAX5033CUSA	0°C to +85°C	8 SO	12
MAX5033CUPA	0°C to +85°C	8 PDIP	
MAX5033CASA	-40°C to +125°C	8 SO	
MAX5033DUSA	0°C to +85°C	8 SO	ADJ
MAX5033DUPA	0°C to +85°C	8 PDIP	
MAX5033DASA	-40°C to +125°C	8 SO	

This product is available in both leaded(Pb) and lead(Pb)-free packages. To order the lead(Pb)-free package, add a + after the part number.

Pin Configuration

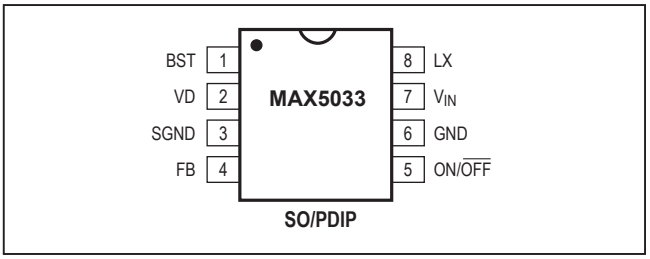

Absolute Maximum Ratings

(Voltages referenced to GND, unless otherwise specified.)
V_{IN} .....-0.3V to +80V
SGND .....-0.3V to +0.3V
LX.....-0.8V to (V_{IN} + 0.3V)
BST.....-0.3V to (V_{IN} + 10V)
BST (transient < 100ns).....-0.3V to (V_{IN} + 15V)
BST to LX.....-0.3V to +10V
BST to LX (transient < 100ns) .....-0.3V to +15V
ON/$\overline{OFF}$ .....-0.3V to +80V
VD.....-0.3V to +12V
FB
MAX5033A/MAX5033B/MAX5033C.....-0.3V to +15V
MAX5033D.....-0.3V to +12V
V_{OUT} Short-Circuit Duration (V_{IN} ≤ 40V).....Indefinite
VD Short-Circuit Duration.....Indefinite
Continuous Power Dissipation (T_A = +70°C)
8-Pin PDIP (derate 9.1mW/°C above +70°C).....727mW
8-Pin SO (derate 5.9mW/°C above +70°C).....471mW
Operating Temperature Range
MAX5033_U_ _.....0°C to +85°C
MAX5033_A_ _.....-40°C to +125°C
Storage Temperature Range.....-65°C to +150°C
Junction Temperature.....+150°C
Lead Temperature (soldering, 10s).....+300°C
Soldering Temperature (reflow)
SO, PDIP Lead(Pb)-free.....+260°C
SO, PDIP Containing lead (Pb).....+240°C

Stresses beyond those listed under "Absolute Maximum Ratings" may cause permanent damage to the device. These are stress ratings only, and functional operation of the device at these or any other conditions beyond those indicated in the operational sections of the specifications is not implied. Exposure to absolute maximum rating conditions for extended periods may affect device reliability.

Electrical Characteristics (MAX5033_U_ _)

(V_{IN} = +12V, $V_{ON/\overline{OFF}}$ = +12V, I_{OUT} = 0, **T_A = 0°C to +85°C**, unless otherwise noted. Typical values are at T_A = +25°C. See the *Typical Operating Circuit*.)

PARAMETER	SYMBOL	CONDITIONS	MIN	TYP	MAX	UNITS
Input Voltage Range	V_{IN}	MAX5033A	7.5		76.0	V
		MAX5033B	7.5		76.0	
		MAX5033C	15		76	
		MAX5033D	7.5		76.0	
Undervoltage Lockout	UVLO			5.2		V
Output Voltage	V_{OUT}	MAX5033A, V_{IN} = 7.5V to 76V, I_{OUT} = 20mA to 500mA	3.185	3.3	3.415	V
		MAX5033B, V_{IN} = 7.5V to 76V, I_{OUT} = 20mA to 500mA	4.85	5.0	5.15	
		MAX5033C, V_{IN} = 15V to 76V, I_{OUT} = 20mA to 500mA	11.64	12	12.36	
Feedback Voltage	V_{FB}	V_{IN} = 7.5V to 76V, MAX5033D	1.192	1.221	1.250	V
Efficiency	η	V_{IN} = 12V, I_{LOAD} = 500mA, MAX5033A		86		%
		V_{IN} = 12V, I_{LOAD} = 500mA, MAX5033B		90		
		V_{IN} = 24V, I_{LOAD} = 500mA, MAX5033C		94		
		V_{IN} = 12V, V_{OUT} = 5V, I_{LOAD} = 500mA, MAX5033D		90		
Quiescent Supply Current	I_Q	V_{FB} = 3.5V, V_{IN} = 7.5V to 76V, MAX5033A		270	440	µA
		V_{FB} = 5.5V, V_{IN} = 7.5V to 76V, MAX5033B		270	440	
		V_{FB} = 13V, V_{IN} = 15V to 76V, MAX5033C		270	440	
		V_{FB} = 1.3V, MAX5033D		270	440	
Shutdown Current	I_{SHDN}	$V_{ON/\overline{OFF}}$ = 0V, V_{IN} = 7.5V to 76V		10	45	µA
Peak Switch Current Limit	I_{LIM}	(Note 1)	0.95	1.5	2.1	A
Switch Leakage Current	I_{OL}	V_{IN} = 76V, $V_{ON/\overline{OFF}}$ = 0V, V_{LX} = 0V		1		µA

Electrical Characteristics (MAX5033_U_ _) (continued)

(V_{IN} = +12V, $V_{ON/\overline{OFF}}$ = +12V, I_{OUT} = 0, **T_A = 0°C to +85°C**, unless otherwise noted. Typical values are at T_A = +25°C. See the *Typical Operating Circuit*.)

PARAMETER	SYMBOL	CONDITIONS	MIN	TYP	MAX	UNITS
Switch On-Resistance	$R_{DS(ON)}$	I_{SWITCH} = 500mA		0.4	0.80	Ω
PFM Threshold	I_{PFM}	Minimum switch current in any cycle	35	65	95	mA
FB Input Bias Current	I_B	MAX5033D	-150	+0.01	+150	nA
ON/$\overline{OFF}$ CONTROL INPUT						
ON/$\overline{OFF}$ Input-Voltage Threshold	$V_{ON/\overline{OFF}}$	Rising trip point	1.53	1.69	1.85	V
ON/$\overline{OFF}$ Input-Voltage Hysteresis	V_{HYST}			100		mV
ON/$\overline{OFF}$ Input Current	$I_{ON/\overline{OFF}}$	$V_{ON/\overline{OFF}}$ = 0V to V_{IN}		10	150	nA
ON/$\overline{OFF}$ Operating Voltage Range	$V_{ON/\overline{OFF}}$				76	V
OSCILLATOR						
Oscillator Frequency	f_{OSC}		109	125	135	kHz
Maximum Duty Cycle	D_{MAX}	MAX5033D		95		%
VOLTAGE REGULATOR						
Regulator Output Voltage	VD	V_{IN} = 8.5V to 76V, I_L = 0mA	6.9	7.8	8.8	V
Dropout Voltage		7.5V ≤ V_{IN} ≤ 8.5V, I_L = 1mA		2.0		V
Load Regulation	$\Delta VD/\Delta I_{VD}$	0 to 5mA		150		Ω
PACKAGE THERMAL CHARACTERISTICS						
Thermal Resistance (Junction to Ambient)	θ_{JA}	SO package (JEDEC 51)		170		°C/W
		DIP package (JEDEC 51)		110		
THERMAL SHUTDOWN						
Thermal-Shutdown Junction Temperature	T_{SH}			+160		°C
Thermal-Shutdown Hysteresis	T_{HYST}			20		°C

Electrical Characteristics (MAX5033_A_ _)

(V_{IN} = +12V, $V_{ON/\overline{OFF}}$ = +12V, I_{OUT} = 0, **T_A = T_J = -40°C to +125°C**, unless otherwise noted. Typical values are at T_A = +25°C. See the *Typical Operating Circuit*.) (Note 2)

PARAMETER	SYMBOL	CONDITIONS	MIN	TYP	MAX	UNITS
Input Voltage Range	V_{IN}	MAX5033A	7.5		76.0	V
		MAX5033B	7.5		76.0	
		MAX5033C	15		76	
		MAX5033D	7.5		76.0	
Undervoltage Lockout	UVLO			5.2		V
Output Voltage	V_{OUT}	MAX5033A, V_{IN} = 7.5V to 76V, I_{OUT} = 20mA to 500mA	3.185	3.3	3.415	V
		MAX5033B, V_{IN} = 7.5V to 76V, I_{OUT} = 20mA to 500mA	4.825	5.0	5.175	
		MAX5033C, V_{IN} = 15V to 76V, I_{OUT} = 20mA to 500mA	11.58	12	12.42	

Electrical Characteristics (MAX5033_A_ _) (continued)

(V_{IN} = +12V, $V_{ON/\overline{OFF}}$ = +12V, I_{OUT} = 0, **T_A = T_J = -40°C to +125°C**, unless otherwise noted. Typical values are at T_A = +25°C. See the *Typical Operating Circuit*.) (Note 2)

PARAMETER	SYMBOL	CONDITIONS	MIN	TYP	MAX	UNITS
Feedback Voltage	V_{FB}	V_{IN} = 7.5V to 76V, MAX5033D	1.192	1.221	1.250	V
Efficiency	η	V_{IN} = 12V, I_{LOAD} = 500mA, MAX5033A		86		%
		V_{IN} = 12V, I_{LOAD} = 500mA, MAX5033B		90		
		V_{IN} = 24V, I_{LOAD} = 500mA, MAX5033C		94		
		V_{IN} = 12V, V_{OUT} = 5V, I_{LOAD} = 500mA, MAX5033D		90		
Quiescent Supply Current	I_Q	V_{FB} = 3.5V, V_{IN} = 7.5V to 76V, MAX5033A		270	440	µA
		V_{FB} = 5.5V, V_{IN} = 7.5V to 76V, MAX5033B		270	440	
		V_{FB} = 13V, V_{IN} = 15V to 76V, MAX5033C		270	440	
		V_{FB} = 1.3V, MAX5033D		270	440	
Shutdown Current	I_{SHDN}	$V_{ON/\overline{OFF}}$ = 0V, V_{IN} = 7.5V to 76V		10	45	µA
Peak Switch Current Limit	I_{LIM}	(Note 1)	0.95	1.5	2.1	A
Switch Leakage Current	I_{OL}	V_{IN} = 76V, $V_{ON/\overline{OFF}}$ = 0V, V_{LX} = 0V		1		µA
Switch On-Resistance	$R_{DS(ON)}$	I_{SWITCH} = 500mA		0.4	0.80	Ω
PFM Threshold	I_{PFM}	Minimum switch current in any cycle	35	65	110	mA
FB Input Bias Current	I_B	MAX5033D	-150	+0.01	+150	nA
ON/$\overline{OFF}$ CONTROL INPUT						
ON/$\overline{OFF}$ Input-Voltage Threshold	$V_{ON/\overline{OFF}}$	Rising trip point	1.50	1.69	1.85	V
ON/$\overline{OFF}$ Input-Voltage Hysteresis	V_{HYST}			100		mV
ON/$\overline{OFF}$ Input Current	$I_{ON/\overline{OFF}}$	$V_{ON/\overline{OFF}}$ = 0V to V_{IN}		10	150	nA
ON/$\overline{OFF}$ Operating Voltage Range	$V_{ON/\overline{OFF}}$				76	V
OSCILLATOR						
Oscillator Frequency	f_{OSC}		105	125	137	kHz
Maximum Duty Cycle	D_{MAX}	MAX5033D		95		%
VOLTAGE REGULATOR						
Regulator Output Voltage	VD	V_{IN} = 8.5V to 76V, I_L = 0mA	6.5	7.8	9.0	V
Dropout Voltage		7.5V ≤ V_{IN} ≤ 8.5V, I_L = 1mA		2.0		V
Load Regulation	$\Delta VD/\Delta I_{VD}$	0 to 5mA		150		Ω
PACKAGE THERMAL CHARACTERISTICS						
Thermal Resistance (Junction to Ambient)	θ_{JA}	SO package (JEDEC 51)		170		°C/W
		DIP package (JEDEC 51)		110		
THERMAL SHUTDOWN						
Thermal-Shutdown Junction Temperature	T_{SH}			+160		°C
Thermal-Shutdown Hysteresis	T_{HYST}			20		°C

Note 1: Switch current at which the current limit is activated.
Note 2: All limits at -40°C are guaranteed by design, not production tested.

Typical Operating Characteristics

(V_{IN} = 12V, $V_{ON/\overline{OFF}}$ = 12V, T_A = -40°C to +125°C, unless otherwise noted. Typical values are at T_A = +25°C. See the *Typical Operating Circuit*, if applicable.)

V_{OUT} vs. TEMPERATURE (MAX5033CASA, V_{OUT} = 12V)

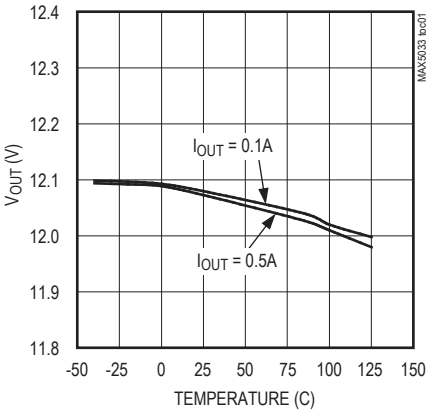

V_{OUT} vs. TEMPERATURE (MAX5033BASA, V_{OUT} = 5V)

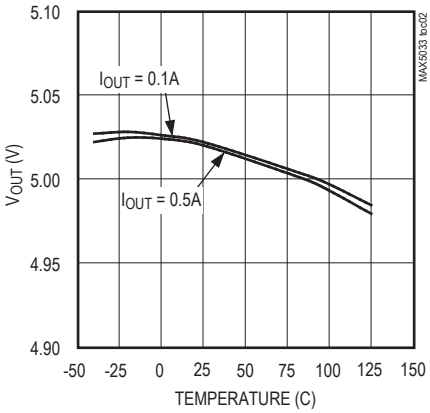

LINE REGULATION (MAX5033CASA, V_{OUT} = 12V)

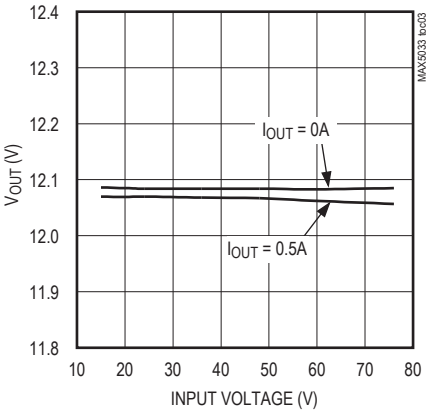

LINE REGULATION (MAX5033BASA, V_{OUT} = 5V)

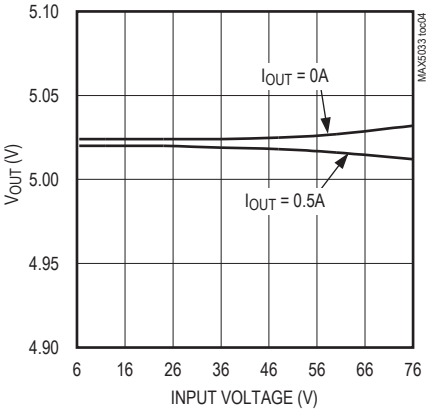

LOAD REGULATION (MAX5033CASA, V_{OUT} = 12V)

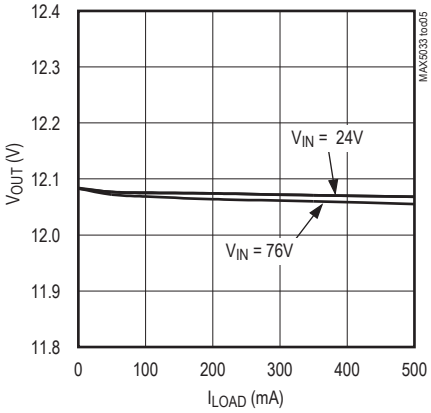

LOAD REGULATION (MAX5033BASA, V_{OUT} = 5V)

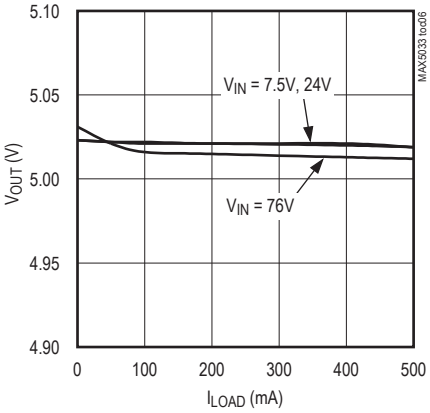

EFFICIENCY vs. LOAD CURRENT (MAX5033BASA, V_{OUT} = 5V)

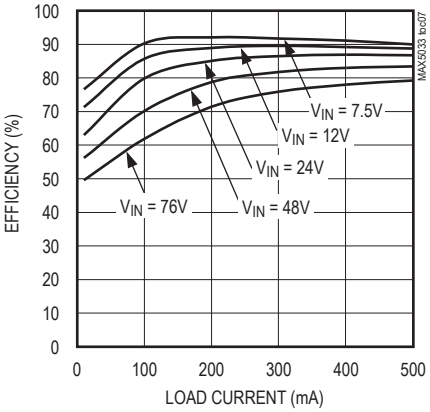

EFFICIENCY vs. LOAD CURRENT (MAX5033CASA, V_{OUT} = 12V)

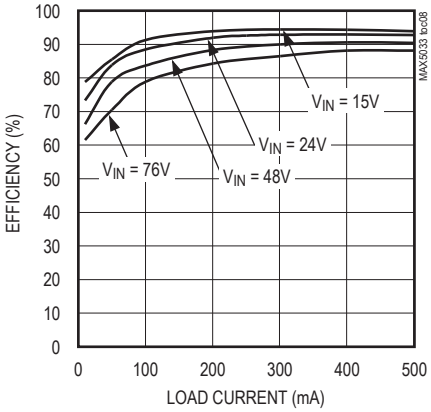

OUTPUT CURRENT LIMIT vs. TEMPERATURE

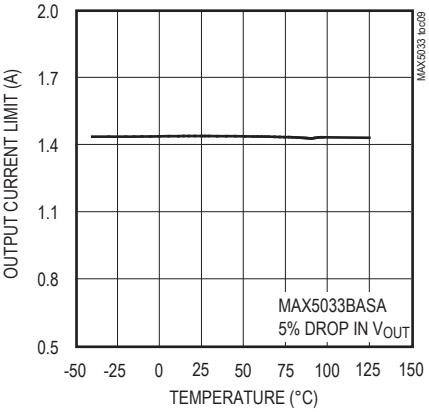

Typical Operating Characteristics (continued)

(V_{IN} = 12V, $V_{ON/\overline{OFF}}$ = 12V, T_A = -40°C to +125°C, unless otherwise noted. Typical values are at T_A = +25°C. See the *Typical Operating Circuit*, if applicable.)

OUTPUT CURRENT LIMIT vs. INPUT VOLTAGE

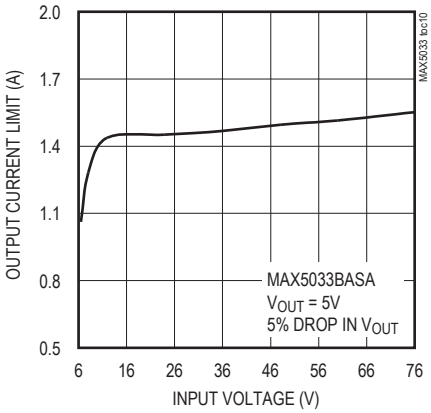

QUIESCENT SUPPLY CURRENT vs. TEMPERATURE

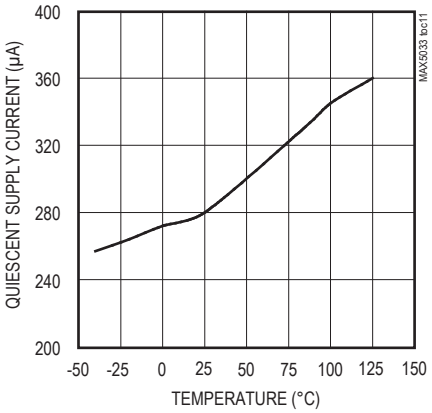

QUIESCENT SUPPLY CURRENT vs. INPUT VOLTAGE

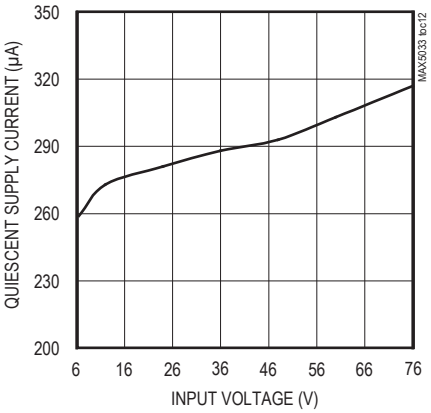

SHUTDOWN CURRENT vs. TEMPERATURE

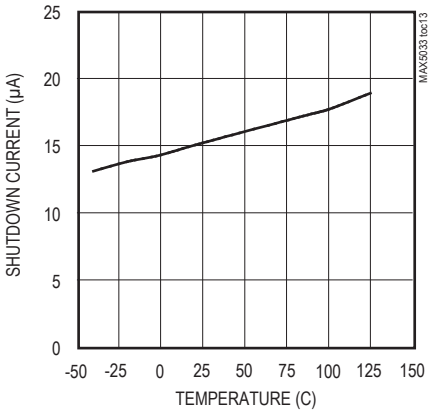

SHUTDOWN CURRENT vs. INPUT VOLTAGE

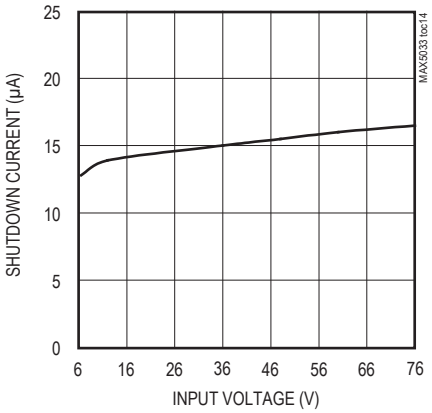

OUTPUT VOLTAGE vs. INPUT VOLTAGE

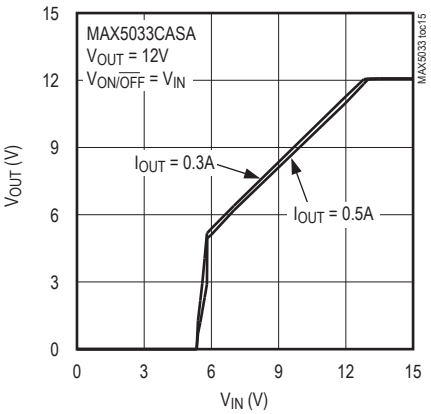

MAX5033BASA LOAD-TRANSIENT RESPONSE

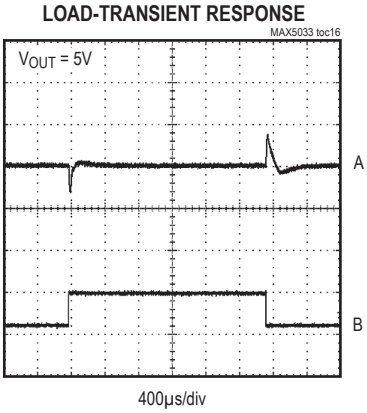

A: V_{OUT}, 200mV/div, AC-COUPLED
B: I_{OUT}, 500mA/div, 100mA TO 500mA

MAX5033BASA LOAD-TRANSIENT RESPONSE

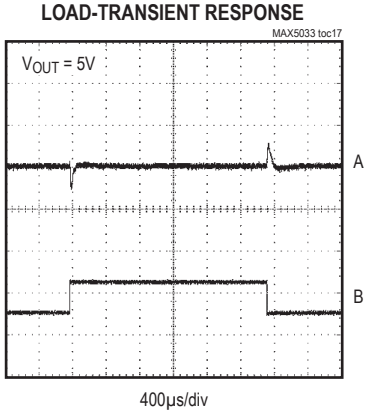

A: V_{OUT}, 100mV/div, AC-COUPLED
B: I_{OUT}, 200mA/div, 100mA TO 250mA

MAX5033BASA LOAD-TRANSIENT RESPONSE

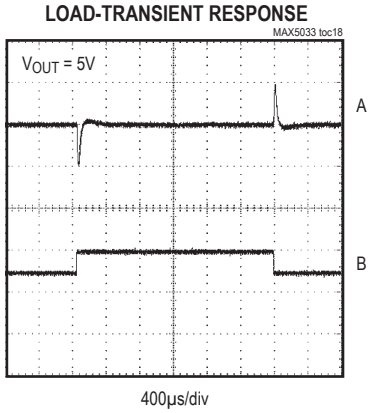

A: V_{OUT}, 100mV/div, AC-COUPLED
B: I_{OUT}, 500mA/div, 250mA TO 500mA

Typical Operating Characteristics (continued)

(V_{IN} = 12V, $V_{ON/\overline{OFF}}$ = 12V, T_A = -40°C to +125°C, unless otherwise noted. Typical values are at T_A = +25°C. See the *Typical Operating Circuit*, if applicable.)

MAX5033BASA LX WAVEFORMS

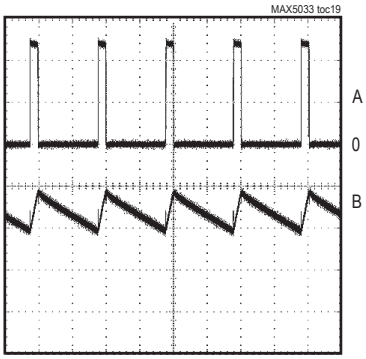

A: SWITCH VOLTAGE (LX PIN) 20V/div, V_{IN} = 48V
B: INDUCTOR CURRENT, 200mA/div, (I_{OUT} = 500mA)

MAX5033BASA LX WAVEFORMS

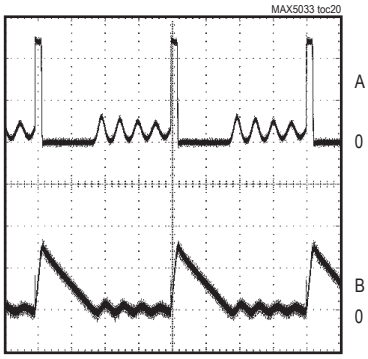

A: SWITCH VOLTAGE, 20V/div, V_{IN} = 48V
B: INDUCTOR CURRENT, 100mA/div (I_{OUT} = 30mA)

MAX5033BASA LX WAVEFORMS

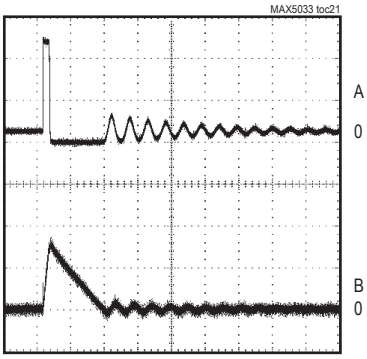

A: SWITCH VOLTAGE (LX PIN), 20V/div, V_{IN} = 48V
B: INDUCTOR CURRENT, 100mA/div (I_{OUT} = 0)

MAX5033BASA STARTUP WAVEFORM (I_O = 0)

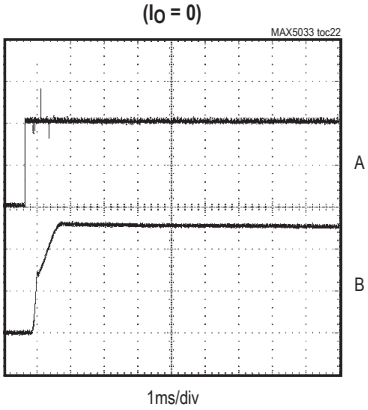

A: $V_{ON/\overline{OFF}}$, 2V/div
B: V_{OUT}, 2V/div

MAX5033BASA STARTUP WAVEFORM (I_O = 0.5A)

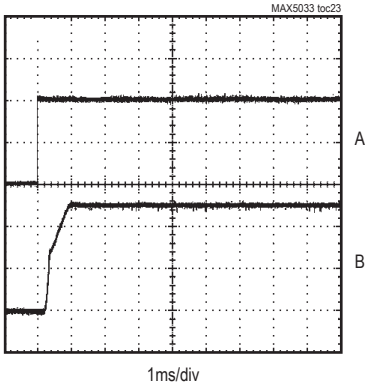

A: $V_{ON/\overline{OFF}}$, 2V/div
B: V_{OUT}, 2V/div

PEAK SWITCH CURRENT LIMIT vs. INPUT VOLTAGE

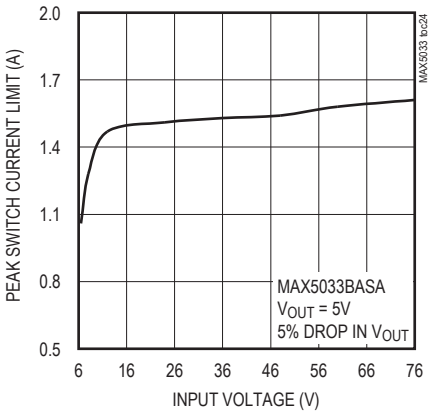

Pin Description

PIN	NAME	FUNCTION
1	BST	Boost Capacitor Connection. Connect a 0.1µF ceramic capacitor from BST to LX.
2	VD	Internal Regulator Output. Bypass VD to GND with a 0.1µF ceramic capacitor.
3	SGND	Internal Connection. SGND must be connected to GND.
4	FB	Output Sense Feedback Connection. For fixed output voltage (MAX5033A, MAX5033B, MAX5033C), connect FB to V_{OUT}. For adjustable output voltage (MAX5033D), use an external resistive voltage-divider to set V_{OUT}. V_{FB} regulating set point is 1.22V.
5	ON/$\overline{OFF}$	Shutdown Control Input. Pull ON/$\overline{OFF}$ low to put the device in shutdown mode. Drive ON/$\overline{OFF}$ high for normal operation.
6	GND	Ground.
7	V_{IN}	Input Voltage. Bypass V_{IN} to GND with a low-ESR capacitor as close to the device as possible.
8	LX	Source Connection of Internal High-Side Switch.

Simplified Block Diagram

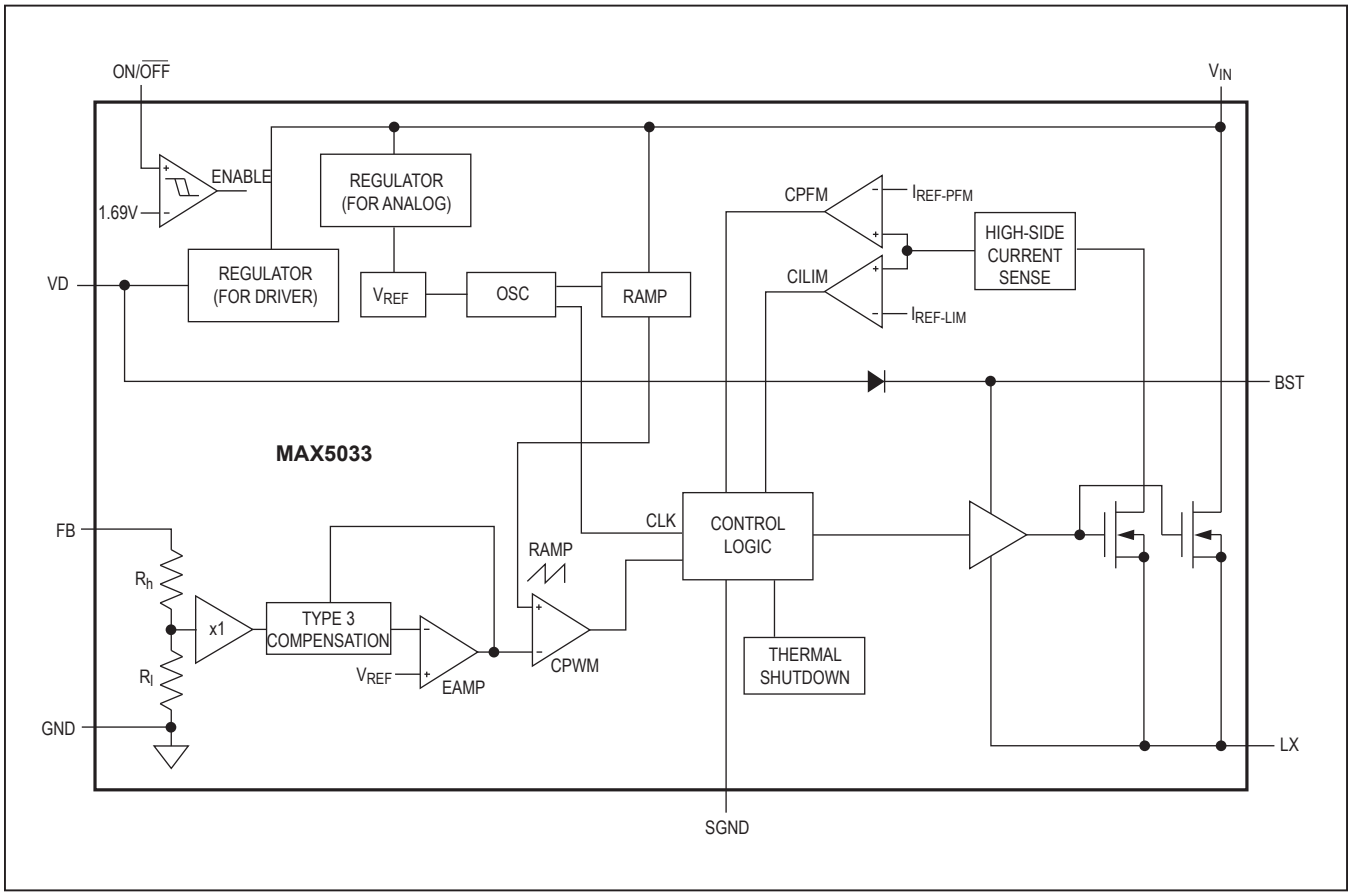

Detailed Description

The MAX5033 step-down DC-DC converter operates from a 7.5V to 76V input voltage range. A unique voltage- mode control scheme with voltage feed-forward and an internal switching DMOS FET provides high efficiency over a wide input voltage range. This pulse-width modulated converter operates at a fixed 125kHz switching frequency. The device also features automatic pulse-skipping mode to provide low quiescent current and high efficiency at light loads. Under no load, the MAX5033 consumes only 270µA, and in shutdown mode, consumes only 10µA. The MAX5033 also features undervoltage lockout, hiccup-mode output shortcircuit protection, and thermal shutdown.

Shutdown Mode

Drive ON/$\overline{OFF}$ to ground to shut down the MAX5033. Shutdown forces the internal power MOSFET off, turns off all internal circuitry, and reduces the V_{IN} supply current to 10µA (typ). The ON/$\overline{OFF}$ rising threshold is 1.69V (typ). Before any operation begins, the voltage at ON/$\overline{OFF}$ must exceed 1.69V (typ). The ON/$\overline{OFF}$ input has 100mV hysteresis.

Undervoltage Lockout (UVLO)

Use the ON/$\overline{OFF}$ function to program the UVLO threshold at the input. Connect a resistive voltage-divider from V_{IN} to GND with the center node to ON/$\overline{OFF}$ as shown in Figure 1. Calculate the threshold value by using the following formula:

$$V_{UVLO(TH)} = \left(1 + \frac{R1}{R2}\right) \times 1.85V$$

The minimum recommended $V_{UVLO(TH)}$ is 6.5V, 7.5V, and 13V for the output voltages of 3.3V, 5V, and 12V, respectively. The recommended value for R2 is less than 1MΩ.

If the external UVLO threshold-setting divider is not used, an internal undervoltage-lockout feature monitors the supply voltage at V_{IN} and allows operation to start when V_{IN} rises above 5.2V (typ). This feature can be used only when V_{IN} rise time is faster than 2ms. For slower V_{IN} rise time, use the resistive divider at ON/$\overline{OFF}$.

Boost High-Side Gate Drive (BST)

Connect a flying bootstrap capacitor between LX and BST to provide the gate-drive voltage to the high-side n-channel DMOS switch. The capacitor is alternately charged from the internally regulated output-voltage VD and placed across the high-side DMOS driver. Use a 0.1µF, 16V ceramic capacitor located as close to the device as possible.

On startup, an internal low-side switch connects LX to ground and charges the BST capacitor to VD. Once the BST capacitor is charged, the internal low-side switch is turned off and the BST capacitor voltage provides the necessary enhancement voltage to turn on the high-side switch.

Thermal-Overload Protection

The MAX5033 features integrated thermal-overload protection. Thermal-overload protection limits total power dissipation in the device, and protects the device in the event of a fault condition. When the die temperature exceeds +160°C, an internal thermal sensor signals the shutdown logic, turning off the internal power MOSFET and allowing the IC to cool. The thermal sensor turns the internal power MOSFET back on after the IC's die temperature cools down to +140°C, resulting in a pulsed output under continuous thermaloverload conditions.

Applications Information

Setting the Output Voltage

The MAX5033A/B/C have preset output voltages of 3.3V, 5.0V, and 12V, respectively. Connect FB to the preset output voltage (see the Typical Operating Circuit).

The MAX5033D offers an adjustable output voltage. Set the output voltage with a resistive voltage-divider connected from the circuit's output to ground (Figure 1). Connect the center node of the divider to FB. Choose R4 less than 15kΩ, then calculate R3 as follows:

$$R3 = \frac{(V_{OUT} - 1.22)}{1.22} \times R4$$

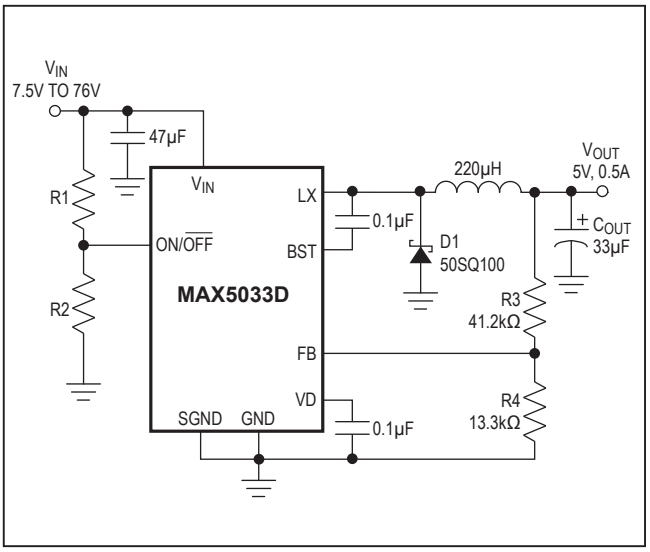

Figure 1. Adjustable Output Voltage

The MAX5033 features internal compensation for optimum closed-loop bandwidth and phase margin. With the preset compensation, it is strongly advised to sense the output immediately after the primary LC.

Inductor Selection

The choice of an inductor is guided by the voltage difference between V_{IN} and V_{OUT}, the required output current, and the operating frequency of the circuit. Use an inductor with a minimum value given by:

$$L = \frac{(V_{IN} - V_{OUT}) \times D}{0.3 \times I_{OUTMAX} \times f_{SW}}$$

where: $D = V_{OUT}/V_{IN}$, I_{OUTMAX} is the maximum output current required, and f_{SW} is the operating frequency of 125kHz. Use an inductor with a maximum saturation current rating equal to at least the peak switch current limit (I_{LIM}). Use inductors with low DC resistance for higher efficiency.

Selecting a Rectifier

The MAX5033 requires an external Schottky rectifier as a freewheeling diode. Connect this rectifier close to the device using short leads and short PC board traces. Choose a rectifier with a continuous current rating greater than the highest expected output current. Use a rectifier with a voltage rating greater than the maximum expected input voltage, V_{IN}. Use a low forward-voltage Schottky rectifier for proper operation and high efficiency. Avoid higher than necessary reverse-voltage Schottky rectifiers that have higher forward-voltage drops. Use a Schottky rectifier with forward-voltage drop (V_{FB}) less than 0.45V at +25°C and maximum load current to avoid forward biasing of the internal body diode (LX to ground). Internal body-diode conduction may cause excessive junction temperature rise and thermal shutdown. Use Table 1 to choose the proper rectifier at different input voltages and output current.

Table 1. Diode Selection

V_{IN} (V)	DIODE PART NUMBER	MANUFACTURER
7.5 to 36	15MQ040N	IR
	B240A	Diodes Incorporated
	B240	Central Semiconductor
	MBRS240, MBRS1540	ON Semiconductor
7.5 to 56	30BQ060	IR
	B360A	Diodes Incorporated
	CMSH3-60	Central Semiconductor
	MBRD360, MBR3060	ON Semiconductor
7.5 to 76	50SQ100, 50SQ80	IR
	MBRM5100	Diodes Incorporated

Input Bypass Capacitor

The discontinuous input-current waveform of the buck converter causes large ripple currents in the input capacitor. The switching frequency, peak inductor current, and the allowable peak-to-peak voltage ripple that reflects back to the source dictate the capacitance requirement. The MAX5033 high switching frequency allows the use of smaller-value input capacitors.

The input ripple is comprised of ΔV_Q (caused by the capacitor discharge) and ΔV_{ESR} (caused by the ESR of the capacitor). Use low-ESR aluminum electrolytic capacitors with high ripple-current capability at the input. Assuming that the contribution from the ESR and capacitor discharge is equal to 90% and 10%, respectively, calculate the input capacitance and the ESR required for a specified ripple using the following equations:

$$ESR_{IN} = \frac{\Delta V_{ESR}}{\left(I_{OUT} + \frac{\Delta I_L}{2}\right)}$$

$$C_{IN} = \frac{I_{OUT} \times D(1-D)}{\Delta V_Q \times f_{SW}}$$

where:

$$\Delta I_L = \frac{(V_{IN} - V_{OUT}) \times V_{OUT}}{V_{IN} \times f_{SW} \times L}$$

$$D = \frac{V_{OUT}}{V_{IN}}$$

I_{OUT} is the maximum output current of the converter and f_{SW} is the oscillator switching frequency (125kHz). For example, at V_{IN} = 48V and V_{OUT} = 3.3V, the ESR and input capacitance are calculated for the input peak-topeak ripple of 100mV or less, yielding an ESR and capacitance value of 130mΩ and 27µF, respectively.

Low-ESR, ceramic, multilayer chip capacitors are recommended for size-optimized application. For ceramic capacitors, assume the contribution from ESR and capacitor discharge is equal to 10% and 90%, respectively.

The input capacitor must handle the RMS ripple current without significant rise in temperature. The maximum capacitor RMS current occurs at about 50% duty cycle.

Ensure that the ripple specification of the input capacitor exceeds the worst-case capacitor RMS ripple current. Use the following equations to calculate the input capacitor RMS current:

$$I_{CRMS} = \sqrt{I_{PRMS}^2 - I_{AVGIN}^2}$$

where :

$$I_{PRMS} = \sqrt{\left(I_{PK}^2 + I_{DC}^2 + \left(I_{PK} \times I_{DC}\right)\right) \times \frac{D}{3}}$$

$$I_{AVGIN} = \frac{V_{OUT} \times I_{OUT}}{V_{IN} \times \eta}$$

$$I_{PK} = I_{OUT} + \frac{\Delta I_L}{2}, I_{DC} = I_{OUT} - \frac{\Delta I_L}{2}$$

$$\text{and } D = \frac{V_{OUT}}{V_{IN}}$$

I_{PRMS} is the input switch RMS current, I_{AVGIN} is the input average current, and η is the converter efficiency.

The ESR of aluminum electrolytic capacitors increases significantly at cold temperatures. Use a 1µF or greater value ceramic capacitor in parallel with the aluminum electrolytic input capacitor, especially for input voltages below 8V.

Output Filter Capacitor

The worst-case peak-to-peak and RMS capacitor ripple current, allowable peak-to-peak output ripple voltage, and the maximum deviation of the output voltage during load steps determine the capacitance and the ESR requirements for the output capacitors.

The output capacitance and its ESR form a zero, which improves the closed-loop stability of the buck regulator. Choose the output capacitor so the ESR zero frequency (f_Z) occurs between 20kHz to 40kHz. Use the following equation to verify the value of f_Z. Capacitors with 100mΩ to 250mΩ ESR are recommended to ensure the closed-loop stability while keeping the output ripple low.

$$f_Z = \frac{1}{2 \times \pi \times C_{OUT} \times ESR_{OUT}}$$

The output ripple is comprised of ΔV_{OQ} (caused by the capacitor discharge) and ΔV_{OESR} (caused by the ESR of the capacitor). Use low-ESR tantalum or aluminum electrolytic capacitors at the output. Assuming that the contributions from the ESR and capacitor discharge equal 80% and 20%, respectively, calculate the output capacitance and the ESR required for a specified ripple using the following equations:

$$ESR_{OUT} = \frac{\Delta V_{OESR}}{\Delta I_L}$$

$$C_{OUT} \approx \frac{\Delta I_L}{2.2 \times \Delta V_{OQ} \times f_{SW}}$$

The MAX5033 has an internal soft-start time (t_{SS}) of 400µs. It is important to keep the output rise time at startup below t_{SS} to avoid output overshoot. The output rise time is directly proportional to the output capacitor. Use 68µF or lower capacitance at the output to control the overshoot below 5%.

In a dynamic load application, the allowable deviation of the output voltage during the fast-transient load dictates the output capacitance value and the ESR. The output capacitors supply the step load current until the controller responds with a greater duty cycle. The response time ($t_{RESPONSE}$) depends on the closedloop bandwidth of the converter. The resistive drop across the capacitor ESR and capacitor discharge cause a voltage droop during a step load. Use a combination of low-ESR tantalum and ceramic capacitors for better transient load and ripple/noise performance. Keep the maximum output-voltage deviation above the tolerable limits of the electronics being powered. Assuming a 50% contribution from the output capacitance discharge and the ESR drop, use the following equations to calculate the required ESR and capacitance value:

$$ESR_{OUT} = \frac{\Delta V_{OESR}}{I_{STEP}}$$

$$C_{OUT} = \frac{I_{STEP} \times t_{RESPONSE}}{\Delta V_{OQ}}$$

where I_{STEP} is the load step and $t_{RESPONSE}$ is the response time of the controller. Controller response time is approximately one-third of the reciprocal of the closed-loop unity-gain bandwidth, 20kHz (typ).

PCB Layout Considerations

Proper PCB layout is essential. Minimize ground noise by connecting the anode of the Schottky rectifier, the input bypass-capacitor ground lead, and the output filter-capacitor ground lead to a single point (star-ground configuration). A ground plane is required. Minimize lead lengths to reduce stray capacitance, trace resistance, and radiated noise. In particular, place the Schottky rectifier diode right next to the device. Also, place BST and VD bypass capacitors very close to the device. Use the PCB copper plane connecting to V_{IN} and LX for heatsinking.

Application Circuit

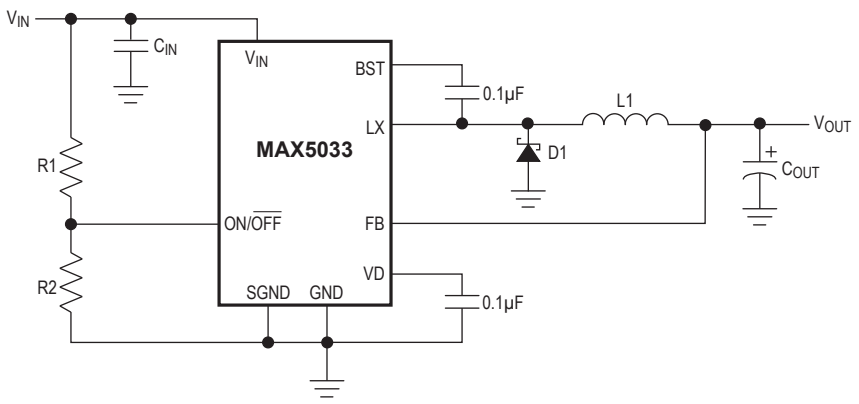

Figure 2. Fixed Output Voltages

Table 2. Typical External Components Selection (Circuit of Figure 2)

V_{IN} (V)	V_{OUT} (V)	I_{OUT} (A)	EXTERNAL COMPONENTS
7.5 to 76	3.3	0.5	C_{IN} = 47µF, Panasonic, EEVFK2A470Q C_{OUT} = 47µF, Vishay Sprague, 594D476X_016C2T C_{BST} = 0.1µF, 0805 R1 = 1MΩ ±1%, 0805 R2 = 384kΩ ±1%, 0805 D1 = 50SQ100, IR L1 = 150µH, Coilcraft Inc., DO5022P-154
7.5 to 76	5	0.5	C_{IN} = 47µF, Panasonic, EEVFK2A470Q C_{OUT} = 33µF, Vishay Sprague, 594D336X_016C2T C_{BST} = 0.1µF, 0805 R1 = 1MΩ ±1%, 0805 R2 = 384kΩ ±1%, 0805 D1 = 50SQ100, IR L1 = 220µH, Coilcraft Inc., DO5022P-224
15 to 76	12	0.5	C_{IN} = 47µF, Panasonic, EEVFK2A470Q C_{OUT} = 15µF, Vishay Sprague, 594D156X_025C2T C_{BST} = 0.1µF, 0805 R1 = 1MΩ ±1%, 0805 R2 = 384kΩ ±1%, 0805 D1 = 50SQ100, IR L1 = 330µH, Coilcraft Inc., DO5022P-334

Table 2. Typical External Components Selection (Circuit of Figure 2) (continued)

V_{IN} (V)	V_{OUT} (V)	I_{OUT} (A)	EXTERNAL COMPONENTS
9 to 14	3.3	0.5	C_{IN} = 100µF, Panasonic, EEVFK1E101P C_{OUT} = 47µF, Vishay Sprague, 594D476X_016C2T C_{BST} = 0.1µF, 0805 R1 = 1MΩ ±1%, 0805 R2 = 274kΩ ±1%, 0805 D1 = B220/A, Diodes Incorporated L1 = 150µH, Coilcraft Inc., DO5022P-154
	5	0.5	C_{IN} = 100µF, Panasonic, EEVFK1E101P C_{OUT} = 33µF, Vishay Sprague, 594D336X_016C2T C_{BST} = 0.1µF, 0805 R1 = 1MΩ ±1%, 0805 R2 = 274kΩ ±1%, 0805 D1 = B220/A, Diodes Incorporated L1 = 220µH, Coilcraft Inc., DO5022P-224
18 to 36	3.3	0.5	C_{IN} = 100µF, Panasonic, EEVFK1H101P C_{OUT} = 47µF, Vishay Sprague, 594D476X_016C2T C_{BST} = 0.1µF, 0805 R1 = 1MΩ ±1%, 0805 R2 = 130kΩ ±1%, 0805 D1 = B240/A, Diodes Incorporated L1 = 150µH, Coilcraft Inc., DO5022P-154
	5	0.5	C_{IN} = 100µF, Panasonic, EEVFK1H101P C_{OUT} = 33µF, Vishay Sprague, 594D336X_016C2T C_{BST} = 0.1µF, 0805 R1 = 1MΩ ±1%, 0805 R2 = 130kΩ ±1%, 0805 D1 = B240/A, Diodes Incorporated L1 = 220µH, Coilcraft Inc., DO5022P-224
	12	0.5	C_{IN} = 100µF, Panasonic, EEVFK1H101P C_{OUT} = 15µF, Vishay Sprague, 594D156X_025C2T C_{BST} = 0.1µF, 0805 R1 = 1MΩ ±1%, 0805 R2 = 130kΩ ±1%, 0805 D1 = B240/A, Diodes Incorporated L1 = 330µH, Coilcraft Inc., DO5022P-334

Table 3. Component Suppliers

SUPPLIER	PHONE	FAX	WEBSITE
AVX	843-946-0238	843-626-3123	www.avxcorp.com
Coilcraft	847-639-6400	847-639-1469	www.coilcraft.com
Diodes Incorporated	805-446-4800	805-446-4850	www.diodes.com
Nichicon	858-824-1515	858-824-1525	www.nichicon.com
Panasonic	714-373-7366	714-737-7323	www.panasonic.com
SANYO	619-661-6835	619-661-1055	www.sanyo.com
TDK	847-803-6100	847-390-4405	www.component.tdk.com
Vishay	402-563-6866	402-563-6296	www.vishay.com

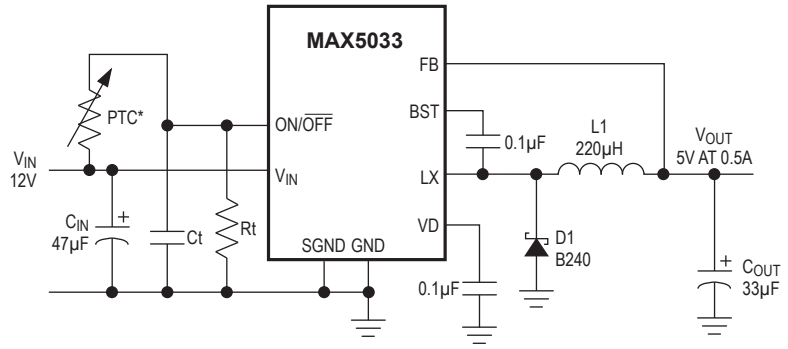

*LOCATE PTC AS CLOSE TO HEAT-DISSIPATING COMPONENTS AS POSSIBLE.

Figure 3. Load Temperature Monitoring with ON/$\overline{OFF}$ (Requires Accurate V_{IN})

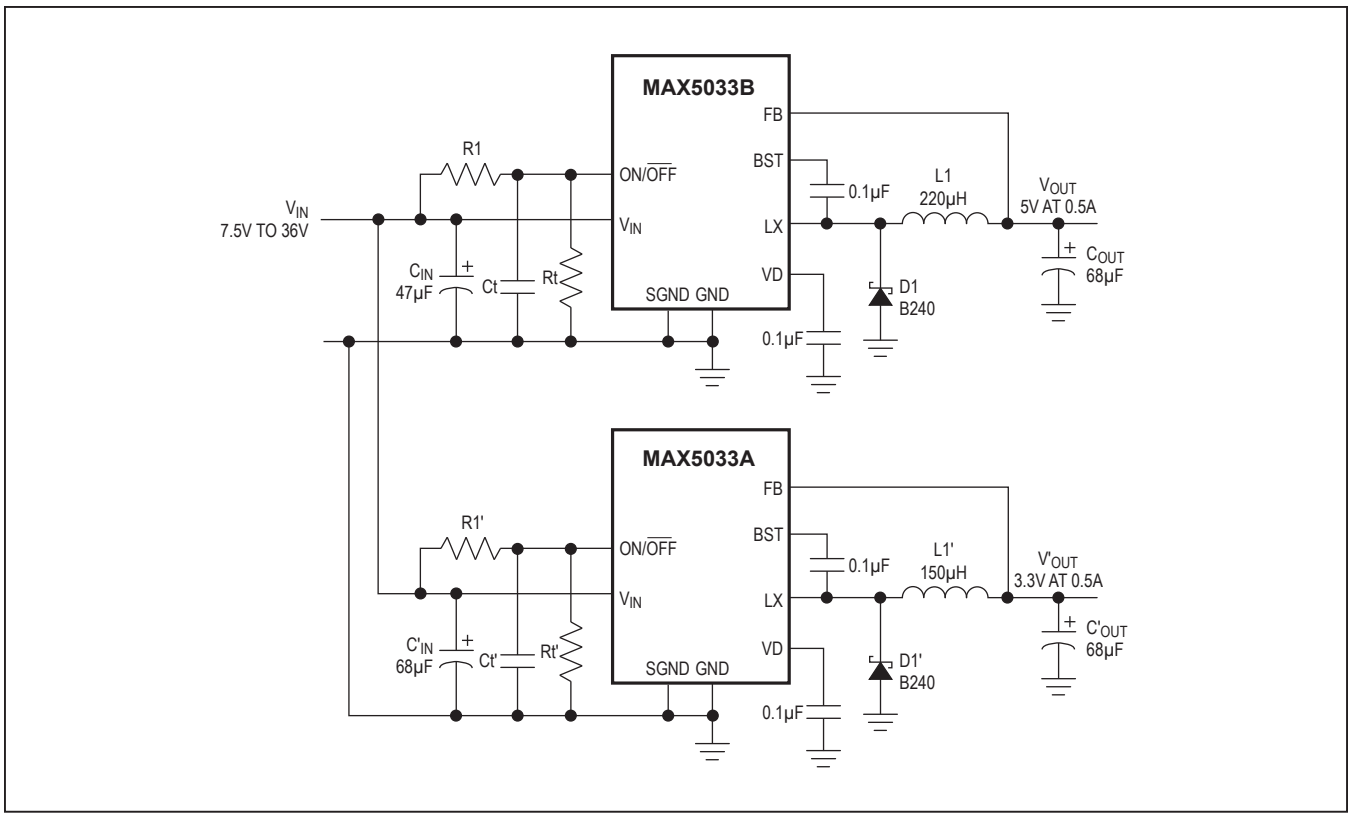

Figure 4. Dual-Sequenced DC-DC Converters (Startup Delay Determined by R1/R1', Ct/Ct' and Rt/Rt')

Chip Information

PROCESS: BiCMOS

Package Information

For the latest package outline information and land patterns (footprints), go to **www.maximintegrated.com/packages**. Note that a "+", "#", or "-" in the package code indicates RoHS status only. Package drawings may show a different suffix character, but the drawing pertains to the package regardless of RoHS status.

PACKAGE TYPE	PACKAGE CODE	OUTLINE NO.	LAND PATTERN NO.
8 PDIP	P8+3	21-0043	—
8 SO	S8+5	21-0041	90-0096

Revision History

REVISION NUMBER	REVISION DATE	DESCRIPTION	PAGES CHANGED
0	9/03	Initial release	—
1	5/04	New product update	1–7, 10
2	6/04	Removed future product asterisk and made specification changes	1, 2, 3
3	1/07	Modified *Absolute Maximum Ratings* specifications	2
4	4/10	Corrected inconsistencies in *Absolute Maximum Ratings* and *Electrical Characteristics* table	1, 2, 3, 4, 17
5	4/14	No /V OPNs; removed Automotive reference in *Applications* section	1

For pricing, delivery, and ordering information, please contact Maxim Direct at 1-888-629-4642, or visit Maxim Integrated's website at www.maximintegrated.com.

Maxim Integrated cannot assume responsibility for use of any circuitry other than circuitry entirely embodied in a Maxim Integrated product. No circuit patent licenses are implied. Maxim Integrated reserves the right to change the circuitry and specifications without notice at any time. The parametric values (min and max limits) shown in the Electrical Characteristics table are guaranteed. Other parametric values quoted in this data sheet are provided for guidance.

Maxim Integrated and the Maxim Integrated logo are trademarks of Maxim Integrated Products, Inc. © 2014 Maxim Integrated Products, Inc.

Компания «ЭлектроПласт» предлагает заключение долгосрочных отношений при поставках импортных электронных компонентов на взаимовыгодных условиях!

Наши преимущества:

- Оперативные поставки широкого спектра электронных компонентов отечественного и импортного производства напрямую от производителей и с крупнейших мировых складов;
- Поставка более 17-ти миллионов наименований электронных компонентов;
- Поставка сложных, дефицитных, либо снятых с производства позиций;
- Оперативные сроки поставки под заказ (от 5 рабочих дней);
- Экспресс доставка в любую точку России;
- Техническая поддержка проекта, помощь в подборе аналогов, поставка прототипов;
- Система менеджмента качества сертифицирована по Международному стандарту ISO 9001;
- Лицензия ФСБ на осуществление работ с использованием сведений, составляющих государственную тайну;
- Поставка специализированных компонентов (Xilinx, Altera, Analog Devices, Intersil, Interpoint, Microsemi, Aeroflex, Peregrine, Syfer, Eurofarad, Texas Instrument, Miteq, Cobham, E2V, MA-COM, Hittite, Mini-Circuits,General Dynamics и др.);

Помимо этого, одним из направлений компании «ЭлектроПласт» является направление «Источники питания». Мы предлагаем Вам помощь Конструкторского отдела:

- Подбор оптимального решения, техническое обоснование при выборе компонента;
- Подбор аналогов;
- Консультации по применению компонента;
- Поставка образцов и прототипов;
- Техническая поддержка проекта;
- Защита от снятия компонента с производства.

Как с нами связаться

Телефон: 8 (812) 309 58 32 (многоканальный)
Факс: 8 (812) 320-02-42
Электронная почта: org@eplast1.ru
Адрес: 198099, г. Санкт-Петербург, ул. Калинина, дом 2, корпус 4, литера А.