⚠Note • Please read rating and ⚠CAUTION (for storage, operating, rating, soldering, mounting and handling) in this catalog to prevent smoking and/or burning, etc.
• This catalog has only typical specifications. Therefore, please approve our product specifications or transact the approval sheet for product specifications before ordering.

P16E.pdf
Nov.22,2012

Ceramic Resonators (CERALOCK®)

Innovator in Electronics

Murata Manufacturing Co., Ltd.

Cat.No.P16E-22

EU RoHS Compliant

- All the products in this catalog comply with EU RoHS.
- EU RoHS is "the European Directive 2011/65/EU on the Restriction of the Use of Certain Hazardous Substances in Electrical and Electronic Equipment."
- For more details, please refer to our website 'Murata's Approach for EU RoHS' (http://www.murata.com/info/rohs.html).

CONTENTS

CERALOCK®, CERALOCK(R) and "CERALOCK" in this catalog are the trademarks of Murata Manufacturing Co., Ltd.

Selection Guide — 2

Part Numbering — 3

1 MHz Chip Type -Tight Frequency Tolerance for Automotive- — 4

● Application Circuits Utilization — 6

2 MHz Chip Type -Standard Frequency Tolerance for Automotive- — 7

● Application Circuits Utilization — 11

Notice for Automotive — 12

Packaging for Automotive — 17

3 MHz Chip Type -Tight Frequency Tolerance for General Usage- — 19

● Application Circuits Utilization — 22

4 MHz Chip Type -Standard Frequency Tolerance for General Usage- — 23

● Application Circuits Utilization — 27

5 MHz Lead Type -Standard Frequency Tolerance for General Usage- — 29

● Application Circuits Utilization — 31

Notice for General Usage

● MHz Chip Type — 32

● MHz Lead Type — 37

Packaging for General Usage

● MHz Chip Type — 38

● MHz Lead Type — 41

Selection Guide

Applications

Automotive

Tight Tolerance

SMD

- **CSTCR_G15C** 4.00–7.99MHz
- **CSTCE_G15C** 8.00–13.99MHz
- **CSTCE_V13C** 14.00–20.00MHz

Standard Tolerance

SMD

- **CSTCC_G_A** 2.00–3.99MHz
- **CSTCR_G_B** 4.00–7.99MHz
- **CSTCE_G_A** 8.00–13.99MHz
- **CSTCE_V_C** 14.00–20.00MHz
- **CSTCV_X_Q** 20.01–70.00MHz
- **CSACV_X_Q** 20.01–70.00MHz (Two Terminals)

Consumer

Tight Tolerance

SMD

- **CSTCR_G15L** **CSTCR_GH5L** 4.00–7.99MHz
- **CSTCE_G15L** **CSTCE_GH5L** 8.00–13.99MHz
- **CSTCE_V13L** **CSTCE_VH3L** 14.00–20.00MHz
- **CSTCW_X11** 20.01–48.00MHz

Standard Tolerance

SMD

- **CSTCC_G** 2.00–3.99MHz
- **CSTCR_G** 4.00–7.99MHz
- **CSTCE_G** 8.00–13.99MHz
- **CSTCE_V** 14.00–20.00MHz
- **CSTCW_X** 20.01–70.00MHz
- **CSACW_X** 20.01–70.00MHz (Two Terminals)
- **CSTCG_V** 20.00–33.86MHz *Super Small!*

Leaded

- **CSTLS_G** 3.40–10.00MHz
- **CSTLS_X** 16.00–70.00MHz

Notice: "CERALOCK® for consumer" and "CERALOCK® for automotive" is different in the specification of Operating Temperature Range, Environmental Characteristics, Physical Characteristics and so on. Please choose either "for consumer" or "for automotive" according to the required specification.

Part Numbering

CERALOCK® (MHz)

(Part Number) CS T CE 16M0 V 5 3 *** -R0
❶ ❷ ❸ ❹ ❺ ❻ ❼ ❽ ❾

❶Product ID

Product ID	
CS	Ceramic Resonators

❷Frequency/Capacitance

Code	Frequency/Capacitance
A	MHz with No Capacitance Built-in
T	MHz with Built-in Capacitance

❸Structure/Size

Code	Structure/Size
LS	Round Lead Type
CC	Cap Chip Type
CR/CE/CG	Small-cap Chip Type
CV	Monolithic Chip Type
CW	Small Monolithic Chip Type

❹Nominal Center Frequency

Expressed by four-digit alphanumerics. The unit is in hertz (Hz).
Decimal point is expressed by capital letter "**M**."

❺Design

Code	Design
G□□	Thickness Shear mode
T/V□□	Thickness Expander mode
X□□	Thickness Expander mode (3rd overtone)

□□ indicates initial frequency tolerance and load capacity.

❻Initial Frequency Tolerance

Code	Initial Frequency Tolerance
5	±0.5%
3	±0.3%
2	±0.2%
1	±0.1%
H	±0.07%

❼Load Capacity

Code	Load Capacity
1	5/6pF
2	10pF
3	15pF
4	22pF
5	30/33/39pF
6	47pF

❽Individual Specification

Code	Individual Specification
***	Three-digit alphanumerics express "Individual Specification."

With standard products, "❽Individual Specification" and "❾Packaging" is omitted.

❾Packaging

Code	Packaging
-B0	Bulk
-A0	Radial Taping H_0=18mm
-R0	Plastic Taping ø=180mm
-R1	Plastic Taping ø=330mm

Radial taping is applied to lead type and plastic taping to chip type.

Ceramic Resonators (CERALOCK®)

MHz Chip Type -Tight Frequency Tolerance for Automotive-

Chip type CERALOCK(R) with built-in load capacitors provides high accuracy in an extremely small package. MURATA's frequency adjustment and package technology expertise has enabled the development of the chip CERALOCK(R) with built-in load capacitors.
This diverse series owes its development to MURATA's original mass production techniques and high reliability, and has achieved importance in the worldwide automotive market.

■ Features

1. The series are high accuracy resonators whose total tolerance is available for less than ±3,000ppm.
2. The series has high reliability and is available for a wide temperature range.
3. Oscillation circuits do not require external load capacitors.
4. The series is available for a wide frequency range.
5. The resonators are extremely small and have a low profile.
6. No adjustment is necessary for oscillation circuits.

■ Applications

1. Cluster panel and Control panel
2. Safety control
   (Anti-lock Brake System, Electronic Stability Control, Airbag, etc.)
3. Engine ECU, Electronic Power Steering, Immobilizer, etc.
4. Car Air conditioner, Power Window, Remote Keyless Entry system, etc.
5. Intelligent Transportation System
   (Lane Keeping System, Millimeter wave radar, etc.)
6. Battery control for hybrid cars

CSTCR_G15C
4.00-7.99MHz

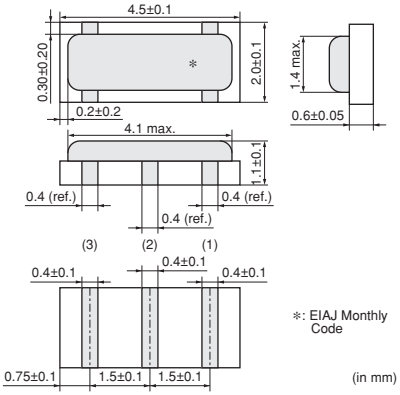

CSTCE_G15C
8.00-13.99MHz

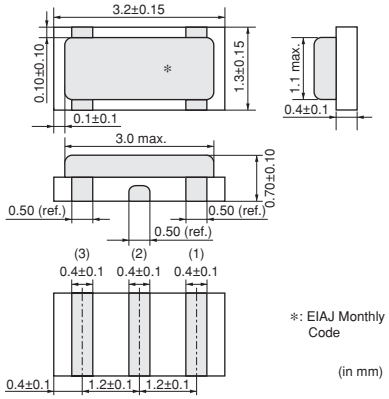

CSTCE_V13C
14.00-20.00MHz

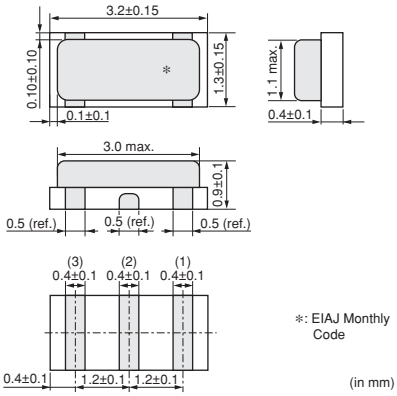

Part Number	Oscillating Frequency (MHz)	Initial Tolerance	Temperature Stability (%)	Temperature Range (°C)
CSTCR_G15C	4.00 to 7.99	±0.1%	±0.13	-40 to 125
CSTCE_G15C	8.00 to 13.99	±0.1%	±0.13	-40 to 125
CSTCE_V13C	14.00 to 20.00	±0.1%	±0.13	-40 to 125

Irregular or stopped oscillation may occur under unmatched circuit conditions. Please check the actual conditions prior to use.

■ Oscillation Frequency Measuring Circuit

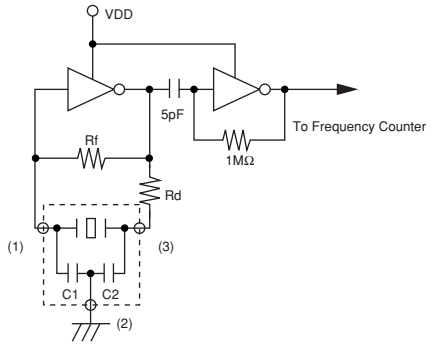

■ Standard Land Pattern Dimensions

CSTCR_G15C
(* This Land Pattern is not common to CSTCR_G.)

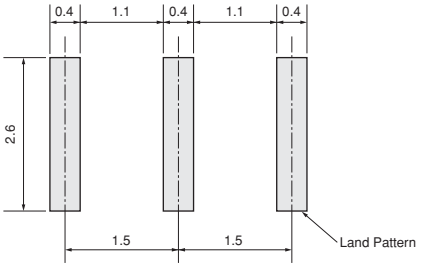

(in mm)

CSTCE_G15C

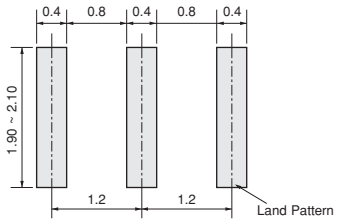

(in mm)

CSTCE_V13C
(* This Land Pattern is not common to CSTCE_V.)

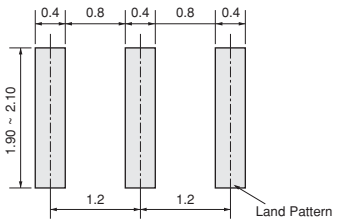

(in mm)

■ Oscillation Frequency Temperature Stability

CSTCR_G15C

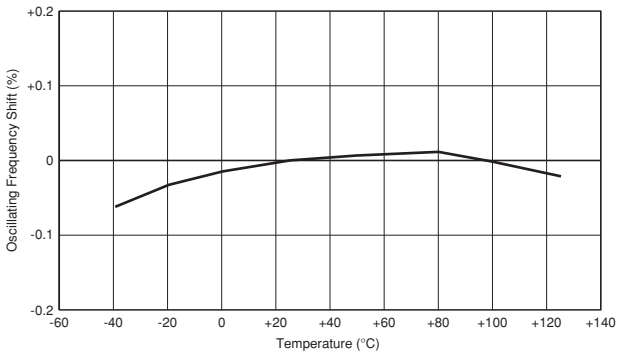

CSTCE_G15C

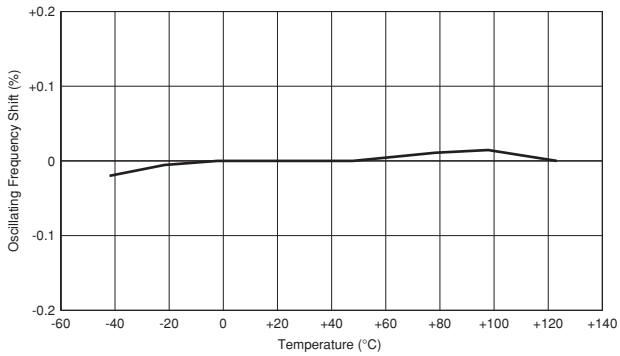

CSTCE_V13C

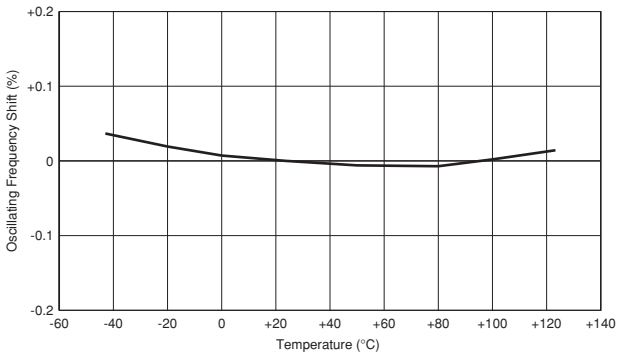

Application Circuits Utilization

■ TMP92CD54IF (Toshiba)

16-bit Microcomputer

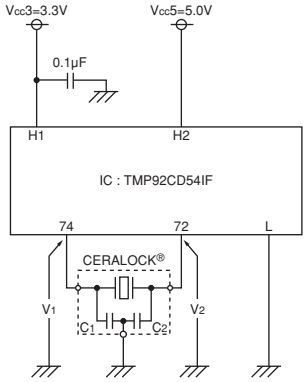

H1: 36, 68, 86
H2: 2, 4, 15, 40, 50, 61, 75
L: 1, 3, 13, 38, 51, 63, 73, 88

CERALOCK®: CSTCE10M0G15C□□-R0
C_1=33pF (Typ.)
C_2=33pF (Typ.)

■ MB90F387 (Fujitsu)

16-bit Microcomputer

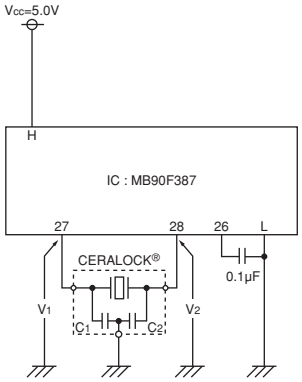

H: 1, 2, 21, 22, 24
L: 20, 23, 25, 48

CERALOCK®: CSTCE8M00G15C□□-R0
C_1=33pF (Typ.)
C_2=33pF (Typ.)

■ MC68HC908AZ60AVFU (Freescale)

8-bit Microcomputer

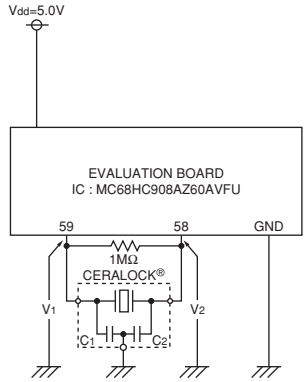

CERALOCK®: CSTCE16M0V13C□□-R0
C_1=15pF (Typ.)
C_2=15pF (Typ.)

■ ST72F561 (HS) (ST Microelectronics)

8-bit Microcomputer

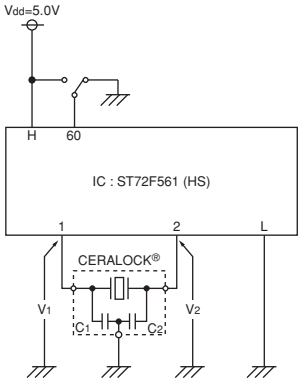

H: 9, 25, 41, 57, 58
L: 8, 24, 40, 55, 56

CERALOCK®: CSTCE8M00G15A□□-R0
C_1=33pF (Typ.)
C_2=33pF (Typ.)

■ μPD70F3283YGC (Renesas)

32-bit Microcomputer

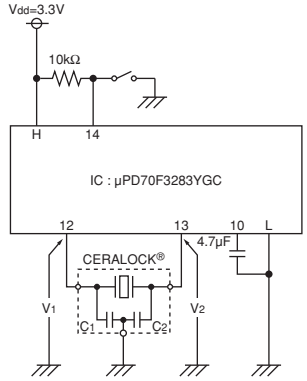

H: 1, 5, 9, 34, 70
L: 2, 8, 11, 15, 33, 69

CERALOCK®: CSTCE10M0G15C□□-R0
C_1=33pF (Typ.)
C_2=33pF (Typ.)

■ M30842MCT-XXXGP (Renesas)

16-bit Microcomputer

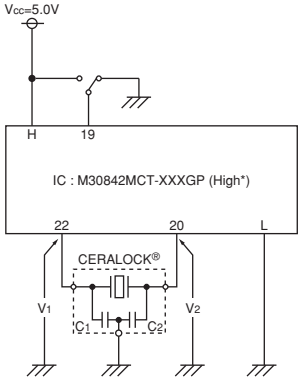

H: 23, 24, 37, 39, 59, 74, 91, 118, 122, 132, 142, 143
L: 15, 16, 21, 36, 41, 57, 76, 93, 110~113, 120, 121, 130, 140

*High: XIN-XOUT Drive Capacity Select Bit

CERALOCK®: CSTCE8M00G15C□□-R0
C_1=33pF (Typ.)
C_2=33pF (Typ.)

Ceramic Resonators (CERALOCK®)

muRata

MHz Chip Type -Standard Frequency Tolerance for Automotive-

Chip type CERALOCK(R) with built-in load capacitors provides high accuracy in an extremely small package. MURATA's frequency adjustment and package technology expertise has enabled the development of the chip CERALOCK(R) with built-in load capacitors.
This diverse series owes its development to MURATA's original mass production techniques and high reliability, and has achieved importance in the worldwide automotive market.

■ Features

1. The series has high reliability and is available for a wide temperature range.
2. Oscillation circuits do not require external load capacitors.
3. The series is available in a wide frequency range.
4. The resonators are extremely small and have a low profile.
5. No adjustment is necessary for oscillation circuits.

■ Applications

1. Cluster panel and Control panel
2. Safety control
   (Anti-lock Brake System, Electronic Stability Control, Airbag, etc.)
3. Engine ECU, Electronic Power Steering, Immobilizer, etc.
4. Car Air conditioner, Power Window, Remote Keyless Entry system, etc.
5. Electronic Toll Collection system, Car Navigation, etc.

CSTCC_G_A
2.00-3.99MHz

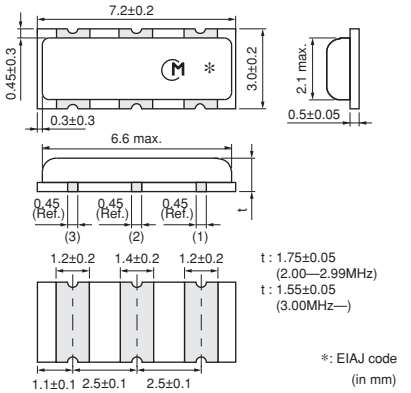

CSTCR_G_B
4.00-7.99MHz

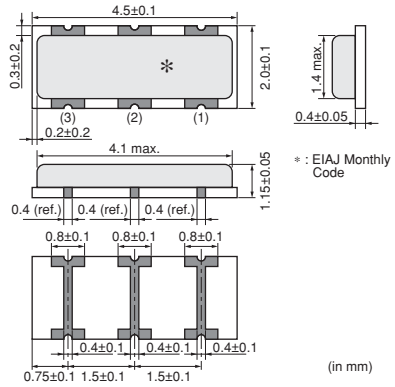

CSTCE_G_A
8.00-13.99MHz

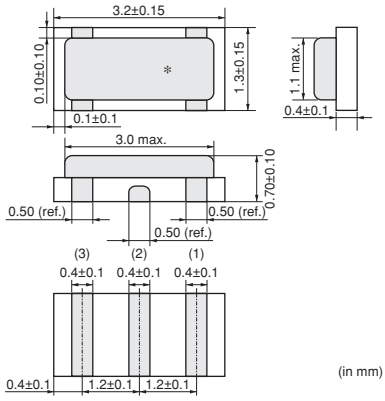

CSTCE_V_C
14.00-20.00MHz

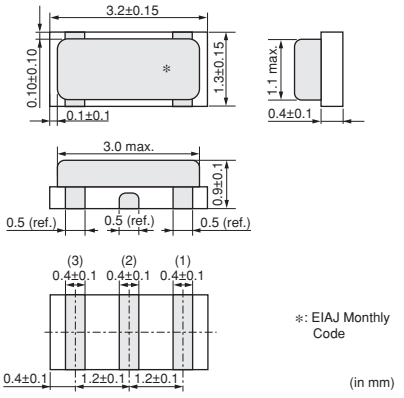

Continued on the following page.

Continued from the preceding page.

CSACV_X_Q
20.01-70.00MHz

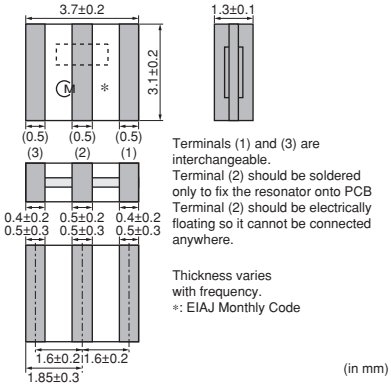

CSTCV_X_Q
20.01-70.00MHz

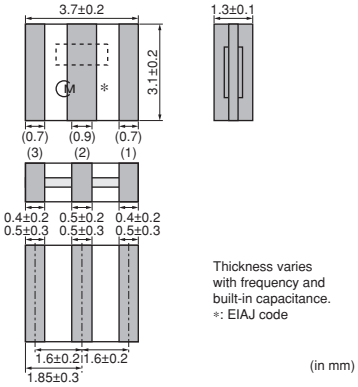

Part Number	Oscillating Frequency (MHz)	Initial Tolerance	Temperature Stability (%)	Temperature Range (°C)
CSTCC_G_A	2.00 to 3.99	±0.5%	±0.4 [-0.6% to +0.3%:Built-in Capacitance 47pF type within Freq.2.00 to 3.49MHz]	-40 to 125
CSTCR_G_B	4.00 to 7.99	±0.5%	±0.15	-40 to 125
CSTCE_G_A	8.00 to 13.99	±0.5%	±0.2	-40 to 125
CSTCE_V_C	14.00 to 20.00	±0.5%	±0.15	-40 to 125
CSACV_X_Q	20.01 to 70.00	±0.5%	±0.3	-40 to 125
CSTCV_X_Q	20.01 to 70.00	±0.5%	±0.3	-40 to 125

Irregular or stopped oscillation may occur under unmatched circuit conditions. Please check the actual conditions prior to use.

■ Oscillation Frequency Measuring Circuit

CSTCC_G_A

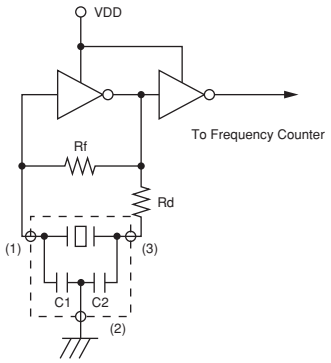

CSTCE_G_A/CSTCE_V_C/CSTCR_G_B/CSTCV_X_Q

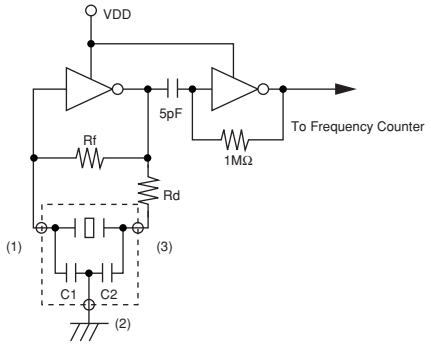

CSACV_X_Q

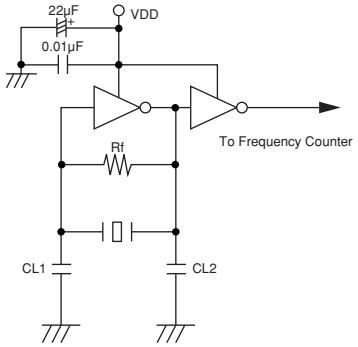

■ Standard Land Pattern Dimensions

CSTCC_G_A

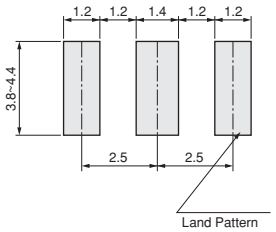

(in mm)

CSTCR_G_B

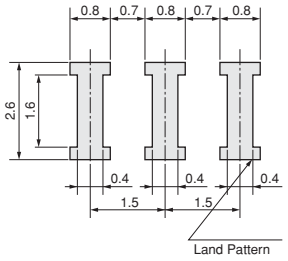

(in mm)

CSTCE_G_A

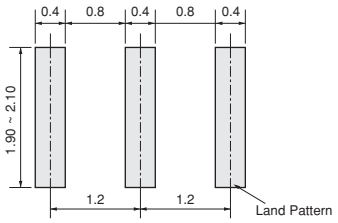

(in mm)

CSTCE_V_C
(* This Land Pattern is not common to CSTCE_V.)

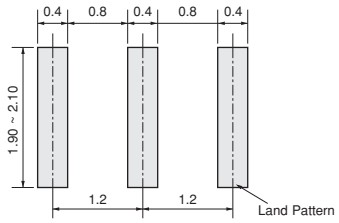

(in mm)

CSTCV_X_Q

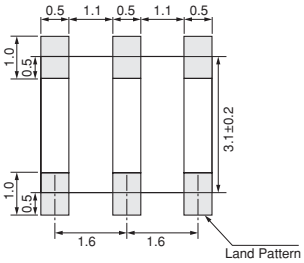

(in mm)

CSACV_X_Q

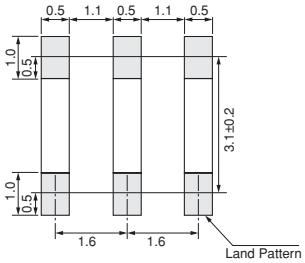

(in mm)

2

■ Oscillation Frequency Temperature Stability

CSTCC_G_A

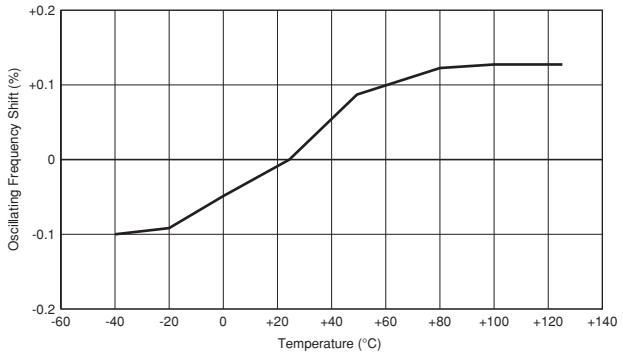

CSTCR_G_B

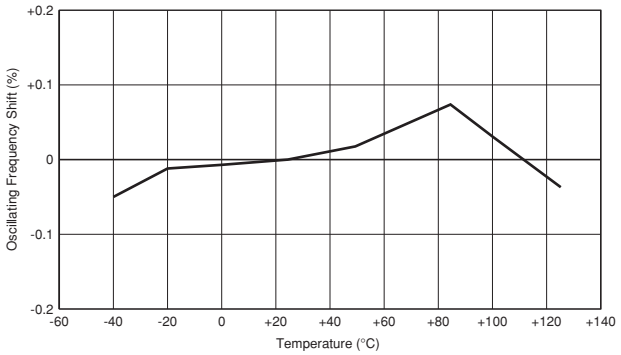

CSTCE_G_A

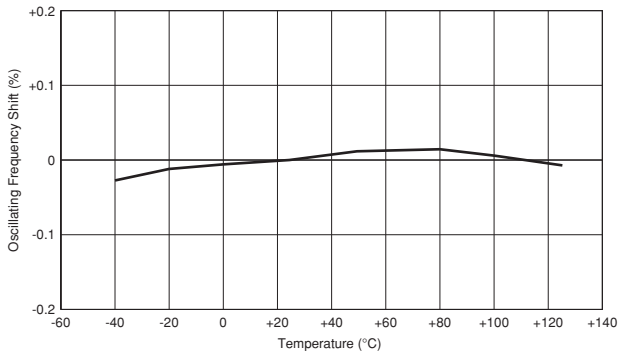

CSTCE_V_C

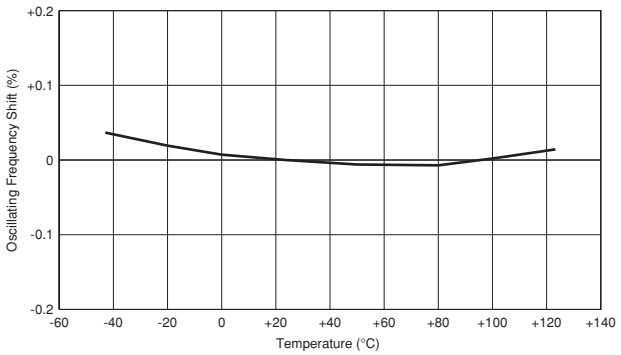

CSTCV_X_Q

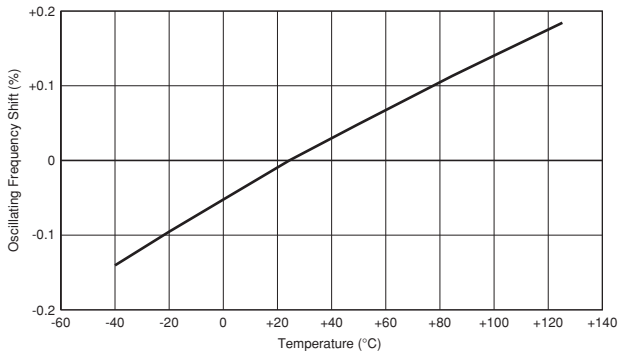

CSACV_X_Q

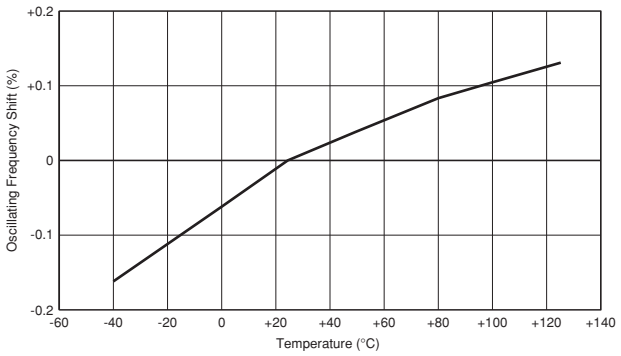

Application Circuits Utilization

■ µPD78F9222MC-5A4 (Renesas)

8-bit Microcomputer

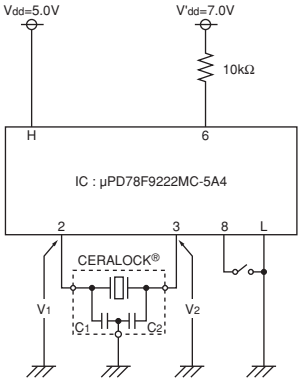

H: 5, 20
L: 1

CERALOCK®: CSTCR6M00G55B-R0
C_1=39pF (Typ.)
C_2=39pF (Typ.)

■ M30260F8AGP (Renesas)

16-bit Microcomputer

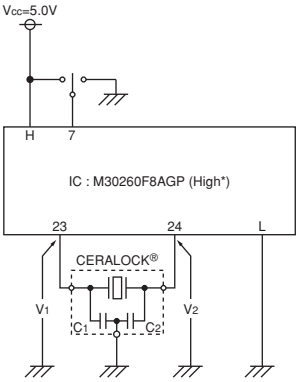

H: 11, 46, 47, 48
L: 4, 9, 44

*High: XIN-XOUT Drive Capacity Select Bit

CERALOCK®: CSTCE10M0G55A-R0
C_1=33pF (Typ.)
C_2=33pF (Typ.)

■ MB90F347D (Fujitsu)

16-bit Microcomputer

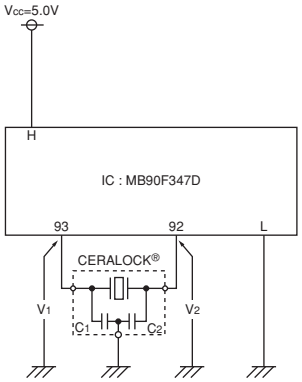

H: 15, 32, 65, 90
L: 16, 35, 44, 66, 91

CERALOCK®: CSTCE8M00G55A-R0
C_1=33pF (Typ.)
C_2=33pF (Typ.)

■ MC68HC908AZ60AVFU (Freescale)

8-bit Microcomputer

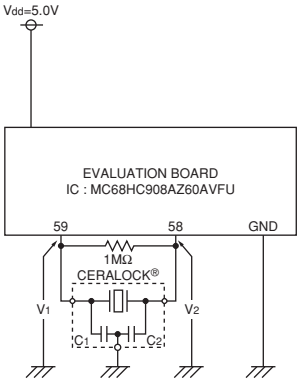

CERALOCK®: CSTCE16M0V53C-R0
C_1=15pF (Typ.)
C_2=15pF (Typ.)

■ ST72F324J6T3 (MS) (ST Microelectronics)

8-bit Microcomputer

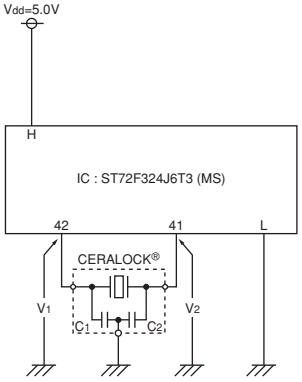

H: 13, 21, 32, 43
L: 14, 22, 33, 39, 40

CERALOCK®: CSTCR4M00G55B-R0
C_1=39pF (Typ.)
C_2=39pF (Typ.)

■ PIC12F675-I/P (HS) (Microchip)

8-bit Microcomputer

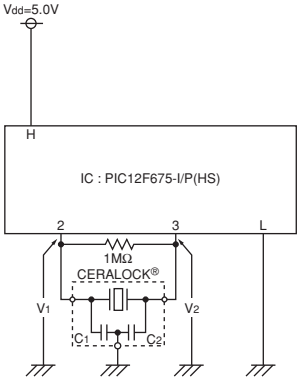

H: 1
L: 4, 8

CERALOCK®: CSTCE8M00G52A-R0
C_1=10pF (Typ.)
C_2=10pF (Typ.)

Notice for Automotive

■ Soldering and Mounting (CSTCC/CSTCR/CSTCE_V/CSTCE_G Series)

1. Soldering

(1) Reflow soldering

Please mount component on a circuit board by reflow soldering. Flow soldering is not acceptable.

Recommendable Flux and Solder

Flux	Please use rosin based flux, not water soluble flux.
Solder	Please use solder (Sn-3.0Ag-0.5Cu) under the following conditions: Standard thickness of soldering paste: 0.10 to 0.15mm.

Recommendable Soldering Profile

Pre-heating	150 to 180°C	60 to 120s
Heating	220°C min.	30 to 60s
Peak Temperature	upper limit: 260°C lower limit: 245°C	1s max. 5s max.

Temperature shall be measured on the surface of component.

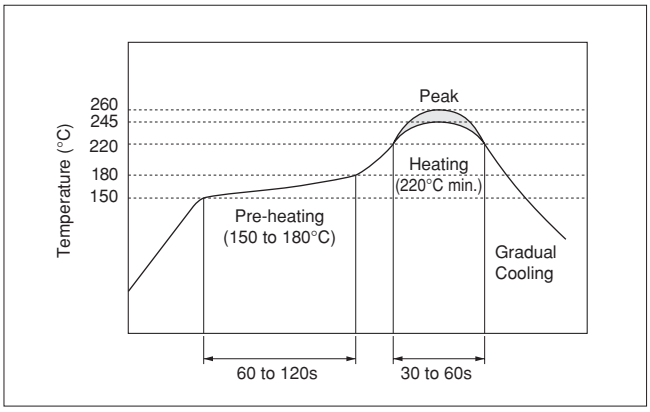

(2) Soldering with Iron

If compelled to mount the component by using soldering iron, please do not directly touch the component with the soldering iron. The component terminals or electrical characteristics may be damaged if excessive thermal stress is applied.

Recommendable Soldering with Iron

Heating of the soldering iron	350°C max.
Watt	30W max.
Shape of the soldering iron	ø3mm max.
Soldering Time	5s max. at one terminal
Solder	Sn-3.0Ag-0.5Cu

(3) Solder Volume

Please make the solder volume less than the height of the substrate to avoid damage to the seal between the metal cap and the substrate.

(4) Other

Do not reuse components removed from a circuit board after soldering.

(5) Conditions for Placement Machines

The component is recommended with placement machines that employ optical placement capabilities. The component may be damaged by excessive mechanical force. Please make sure that you have evaluated by using placement machines before going into mass production. Do not use placement machines that utilize mechanical positioning. Please contact Murata for details beforehand.

Continued on the following page. ↗

Notice for Automotive

Continued from the preceding page.

2. Wash

(1) Cleaning Solvents
HCFC, Isopropanol, Tap water, Demineralized water, Cleanthrough750H, Pine alpha 100S, Techno care FRW

(2) Temperature Difference : dT *1
dT≦60°C (dT=Component-solvent)
*1 ex. If the component is immersed at +90°C into cleaning solvent at +60°C, then dT=30°C.

(3) Conditions
(a) Ultrasonic Wash
1 minute max. in above solvent at +60°C max.
(Frequency: 28kHz, Output: 20W/l)

(b) Immersion Wash
5 minutes max. in above solvent at +60°C max.

(c) Shower or Rinse Wash
5 minutes max. in above solvent at +60°C max.

(4) Drying
5 minutes max. by air blow at +80°C max.

(5) Other
(a) Total washing time should be within 10 minutes.
(b) The component may be damaged if it is washed with chlorine, petroleum, or alkali cleaning solvent.

3. Coating

Conformal coating of the component is acceptable. However, the resin material, curing temperature, and other process conditions should be evaluated to confirm stable electrical characteristics are maintained.

Notice for Automotive

■ Soldering and Mounting (CSTCV/CSACV Series)

1. Soldering

(1) Reflow soldering

Please mount component on a circuit board by reflow soldering. Flow soldering is not acceptable.

Recommendable Flux and Solder

Flux	Please use rosin based flux, not water soluble flux.
Solder	Please use solder (Sn-3.0Ag-0.5Cu) under the following conditions: Standard thickness of soldering paste: 0.10 to 0.15mm.

Recommendable Soldering Profile

Pre-heating	150 to 180°C	60 to 120s
Heating	220°C min.	30 to 60s
Peak Temperature	upper limit: 260°C lower limit: 245°C	1s max. 5s max.

Temperature shall be measured on the surface of component.

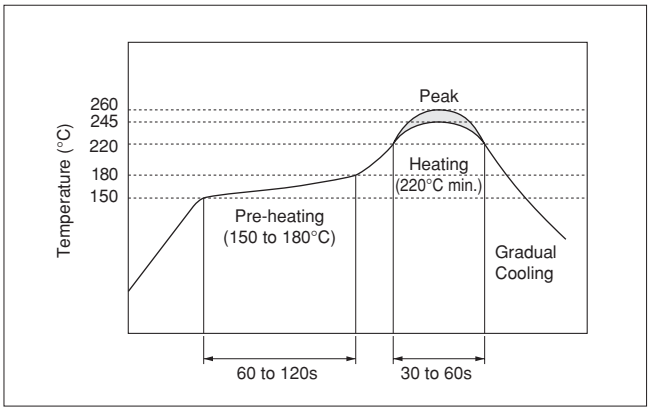

(2) Soldering with Iron

If compelled to mount the component by using soldering iron, please do not directly touch the component with the soldering iron. The component terminals or electrical characteristics may be damaged if excessive thermal stress is applied.

Recommendable Soldering with Iron

Heating of the soldering iron	350°C max.
Watt	30W max.
Shape of the soldering iron	ø3mm max.
Soldering Time	5s max. at one terminal
Solder	Sn-3.0Ag-0.5Cu

(3) Other

Do not reuse components removed from a circuit board after soldering.

(4) Conditions for Placement Machines

The component is recommended with placement machines that employ optical placement capabilities. The component may be damaged by excessive mechanical force. Please make sure that you have evaluated by using placement machines before going into mass production. Do not use placement machines that utilize mechanical positioning. Please contact Murata for details beforehand.

2. Wash

(1) Cleaning Solvents

HCFC, Isopropanol, Tap water, Demineralized water, Cleanthrough750H, Pine alpha 100S, Techno care FRW

(2) Temperature Difference : dT *1

dT≦60°C (dT=Component-solvent)

*1 ex. If the component is immersed at +90°C into cleaning solvent at +60°C, then dT=30°C.

Continued on the following page.

Notice for Automotive

Continued from the preceding page.

(3) Conditions

(a) Ultrasonic Wash
1 minute max. in above solvent at +60°C max.
(Frequency: 28kHz, Output: 20W/l)

(b) Immersion Wash
5 minutes max. in above solvent at +60°C max.

(c) Shower or Rinse Wash
5 minutes max. in above solvent at +60°C max.

(4) Drying
5 minutes max. by air blow at +80°C max.

(5) Other
(a) Total washing time should be within 10 minutes.
(b) The component may be damaged if it is washed with chlorine, petroleum, or alkali cleaning solvent.

3. Coating

Conformal coating of the component is acceptable. However, the resin material, curing temperature, and other process conditions should be evaluated to confirm stable electrical characteristics are maintained.

Notice for Automotive

■ Storage and Operating Conditions

1. Product Storage Conditions
   Please store the products in a room where the temperature/humidity is stable, and avoid such places where there are large temperature changes.
   Please store the products under the following conditions:
   Temperature: -10 to +40°C
   Humidity: 15 to 85% R.H.
2. Expiration Date on Storage
   Expiration date (Shelf life) of the products is six months after delivery under the conditions of a sealed and unopened package. Please use the products within six months after delivery. If you store the products for a long time (more than six months), use carefully because the products may be degraded in solderability and/or rusty.
   Please confirm solderability and characteristics for the products regularly.
3. Notice on Product Storage
   (1) Please do not store the products in a chemical atmosphere (Acids, Alkali, Bases, Organic gas, Sulfides and so on), because the characteristics may be reduced in quality, and/or be degraded in the solderability due to the storage in a chemical atmosphere.
   (2) Please do not put the products directly on the floor without anything under them to avoid damp and/or dusty places.
   (3) Please do not store the products in places such as: in a damp heated place, in a place where direct sunlight comes in, in a place applying vibrations.
   (4) Please use the products immediately after the package is opened, because the characteristics may be reduced in quality, and/or be degraded in the solderability due to storage under the poor conditions.
   (5) Please do not drop the products to avoid cracking of ceramic elements.
4. Other
   Conformal coating of the component is acceptable. However, the resin material, curing temperature, and other process conditions should be evaluated to confirm that stable electrical characteristics are maintained.
   Please be sure to consult with our sales representatives or engineers whenever and prior to using the products.

■ Rating

The component may be damaged if excessive mechanical stress is applied.

■ Handling

"CERALOCK" may stop oscillating or oscillate irregularly under improper circuit conditions.

Packaging for Automotive

■ Minimum Quantity

Part Number	Plastic Tape ø180mm	Plastic Tape ø330mm	Bulk	Dimensions
CSTCC_G_A	2,000	6,000	500	a
CSTCR_G_B	3,000	9,000	500	a
CSTCR_G15C	3,000	9,000	500	a
CSTCE_G_A	3,000	9,000	500	b
CSTCE_G15C	3,000	9,000	500	b
CSTCE_V_C	3,000	9,000	500	b
CSTCE_V13C	3,000	9,000	500	b
CSTCV_X_Q	2,000	6,000	500	a
CSACV_X_Q	2,000	6,000	500	a

The order quantity should be an integral multiple of the "Minimum Quantity" shown above. (pcs.)

■ Dimensions of Reel

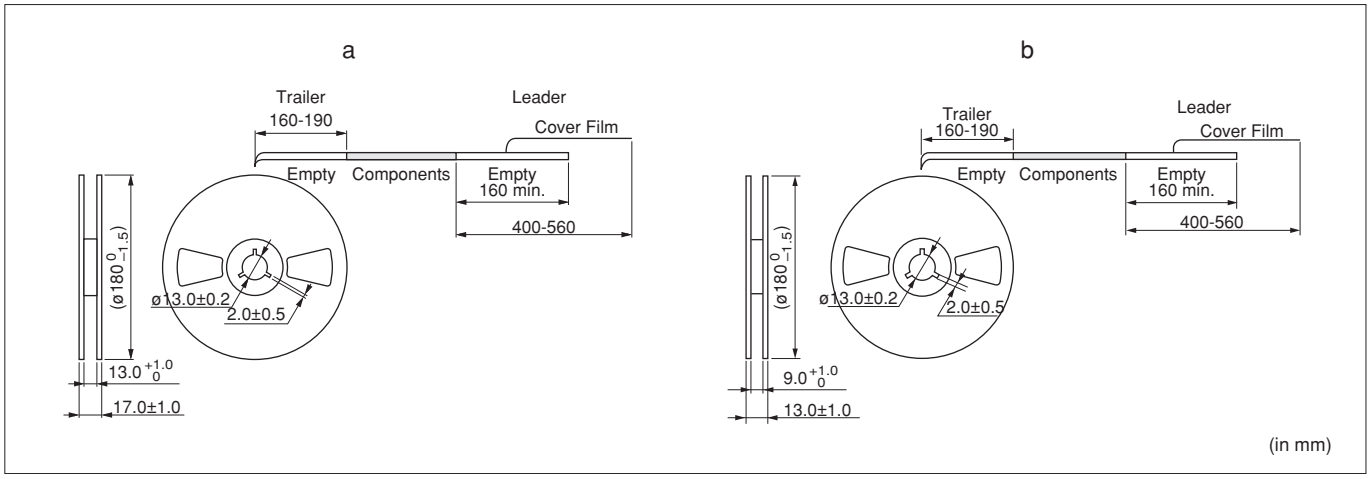

■ Dimensions of Taping

CSTCR_G15C

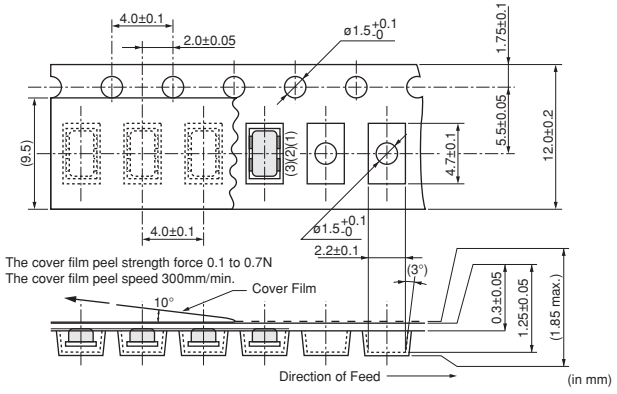

CSTCE_G15C

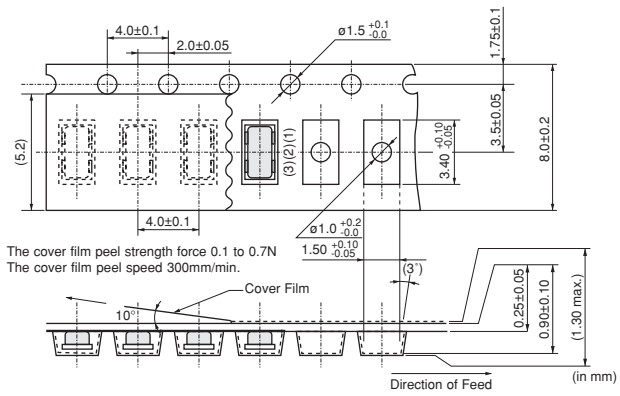

Continued on the following page. ↗

Packaging for Automotive

Continued from the preceding page.

■ Dimensions of Taping

CSTCE_V13C

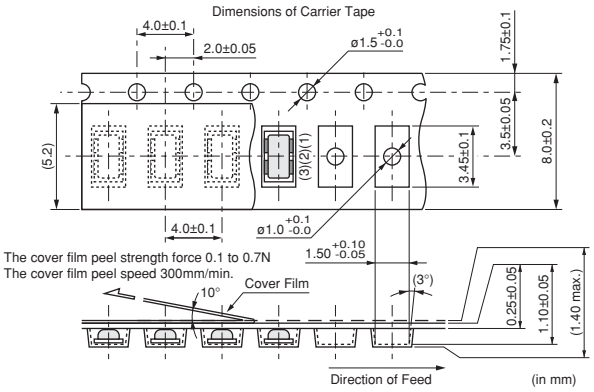

(in mm)

CSTCC_G_A

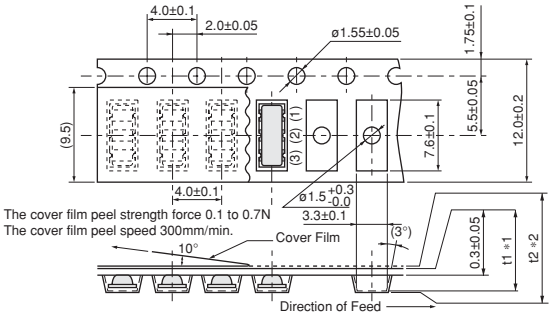

*1, *2: Dimensions vary with frequency range of CERALOCK®.

Frequency Range		2.00–2.99MHz	3.00–3.99MHz
t1	*1	1.85±0.05	1.65±0.05
t2	*2	2.45 max.	2.25 max.

(in mm)

CSTCR_G_B

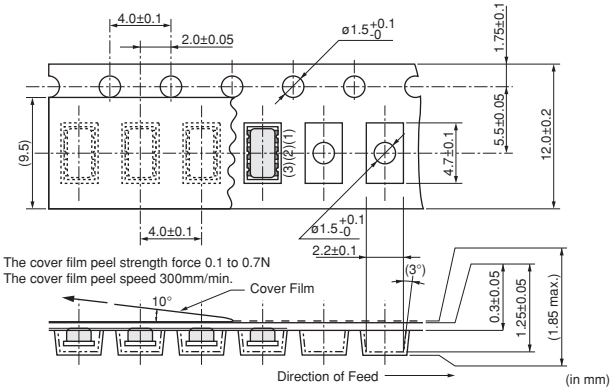

(in mm)

CSTCE_G_A

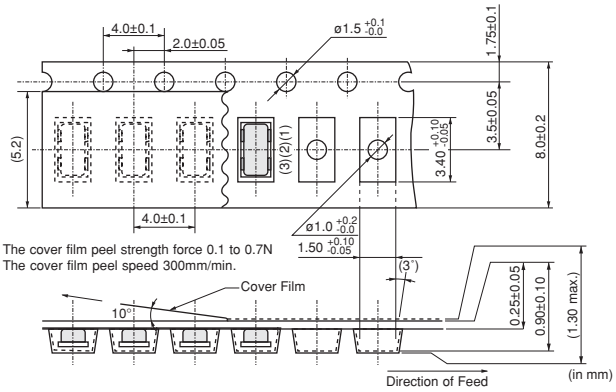

(in mm)

CSTCE_V_C

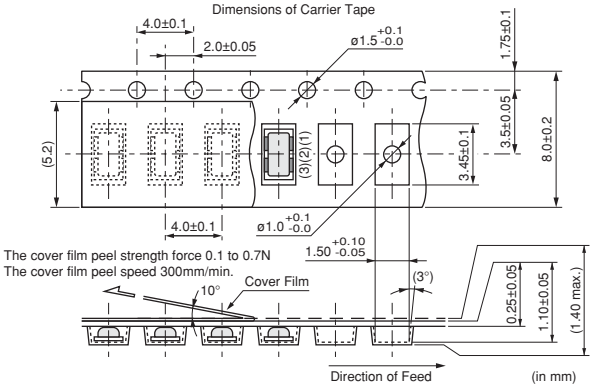

(in mm)

CSTCV_X_Q

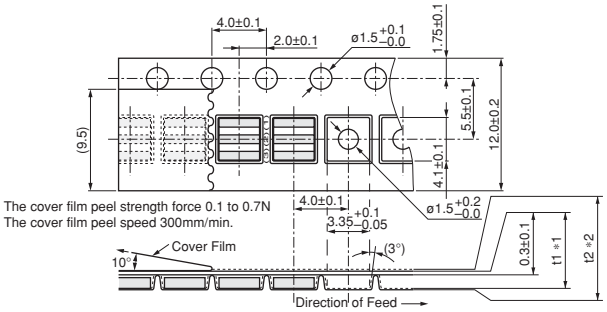

*1, *2: Dimensions vary with product thickness of CERALOCK®.

Thickness of CERALOCK®		1.50–1.40	1.30–1.20	1.10–1.00
t1	*1	1.65±0.1	1.45±0.1	1.2±0.1
t2	*2	2.0 max.	1.8 max.	1.5 max.

(in mm)

CSACV_X_Q

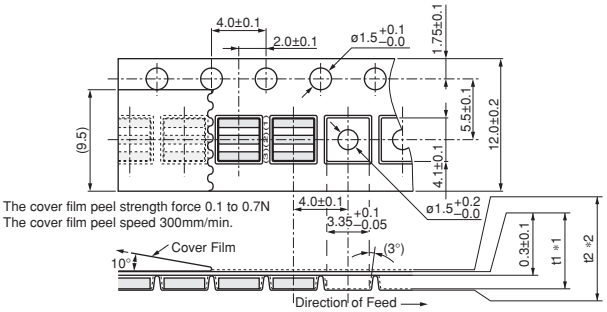

*1, *2: Dimensions vary with product thickness of CERALOCK®.

Thickness of CERALOCK®		1.50–1.40	1.30–1.20	1.10–1.00
t1	*1	1.65±0.1	1.45±0.1	1.2±0.1
t2	*2	2.0 max.	1.8 max.	1.5 max.

(in mm)

Ceramic Resonators (CERALOCK®)

MHz Chip Type -Tight Frequency Tolerance for General Usage-

Chip type CERALOCK(R) with built-in load capacitors provides high accuracy in an extremely small package. MURATA's frequency adjustment and packaging technology expertise has enabled the development of the chip CERALOCK(R) with built-in load capacitors.
High-density mounting is made possible by the small package and the elimination of the need for an external load capacitor.

■ Features

1. Oscillation circuits do not require external load capacitors.
2. Available in a wide frequency range.
3. Extremely small and have a low profile.
4. No adjustment is necessary for oscillation circuits.

■ Applications

1. Clock oscillators for USB (Full-speed) controller ICs
2. Audio equipment and musical instruments, etc.
3. Other applications for replacement of Crystal Oscillators

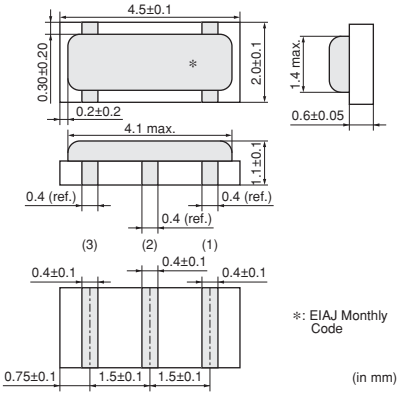

CSTCR_G15L/CSTCR_GH5L
4.00-7.99MHz

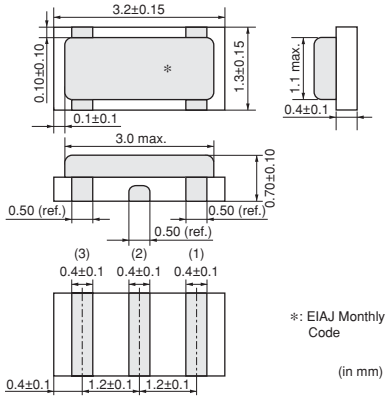

CSTCE_G15L/CSTCE_GH5L
8.00-13.99MHz

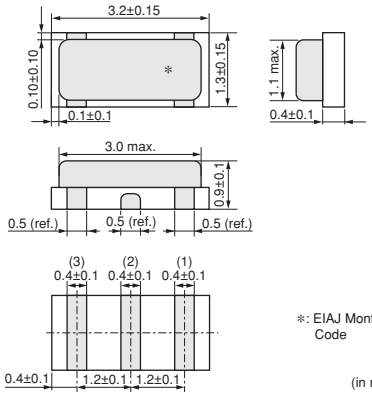

CSTCE_V13L/CSTCE_VH3L
14.00-20.00MHz

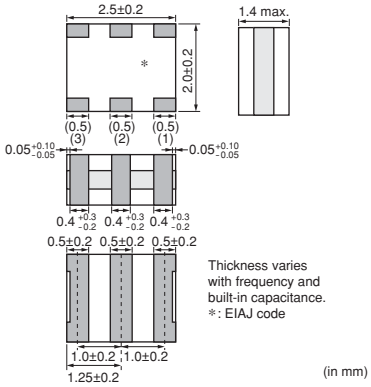

CSTCW_X11
20.01-48.00MHz

Part Number	Oscillating Frequency (MHz)	Initial Tolerance	Temperature Stability (%)	Temperature Range (°C)
CSTCR_G15L	4.00 to 7.99	±0.1%	±0.08	0 to 70
CSTCR_GH5L	4.00 to 7.99	±0.07%	±0.08	0 to 70
CSTCE_G15L	8.00 to 13.99	±0.1%	±0.08	0 to 70
CSTCE_GH5L	8.00 to 13.99	±0.07%	±0.08	0 to 70
CSTCE_V13L	14.00 to 20.00	±0.1%	±0.08	0 to 70
CSTCE_VH3L	14.00 to 20.00	±0.07%	±0.08	0 to 70
CSTCW_X11	20.01 to 48.00	±0.1%	±0.1	0 to 70

Irregular or stopped oscillation may occur under unmatched circuit conditions. Please check the actual conditions prior to use.

■ Oscillation Frequency Measuring Circuit

CSTCR_G15L/CSTCR_GH5L/CSTCE_G15L/ CSTCE_GH5L/CSTCE_V13L/CSTCE_VH3L

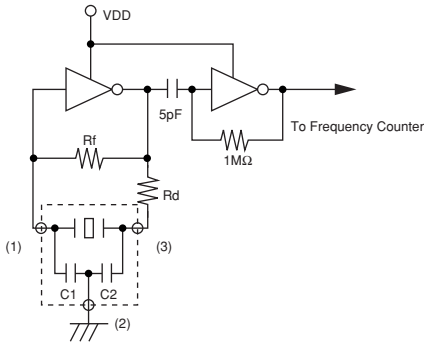

CSTCW_X11

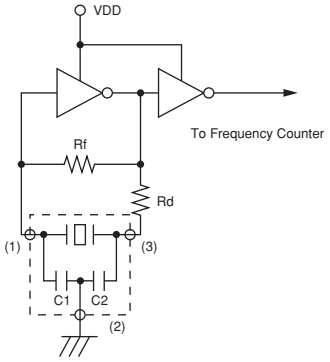

3

■ Standard Land Pattern Dimensions

CSTCR_G15L/CSTCR_GH5L
(* This Land Pattern is not common to CSTCR_G.)

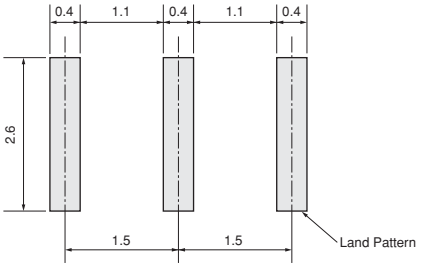

(in mm)

CSTCE_G15L/CSTCE_GH5L

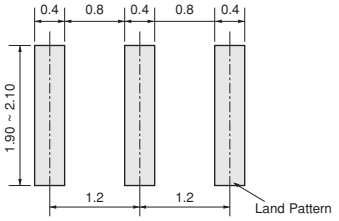

(in mm)

CSTCE_V13L/CSTCE_VH3L
(* This Land Pattern is not common to CSTCE_V.)

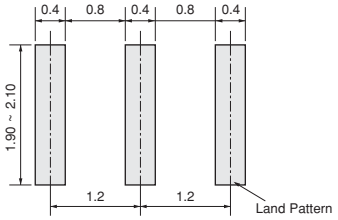

(in mm)

CSTCW_X11

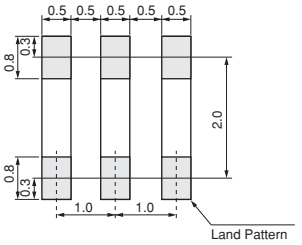

(in mm)

■ Oscillation Frequency Temperature Stability

CSTCR_G15L/CSTCR_GH5L

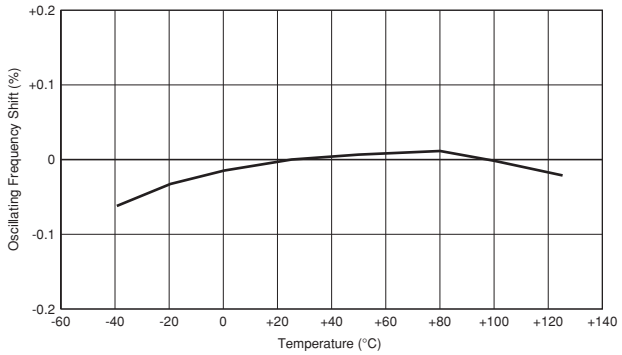

CSTCE_G15L/CSTCE_GH5L

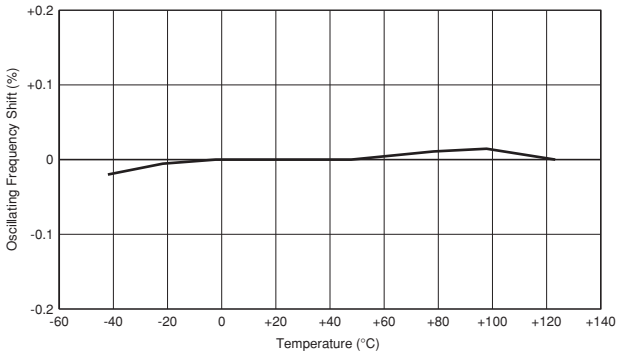

CSTCE_V13L/CSTCE_VH3L

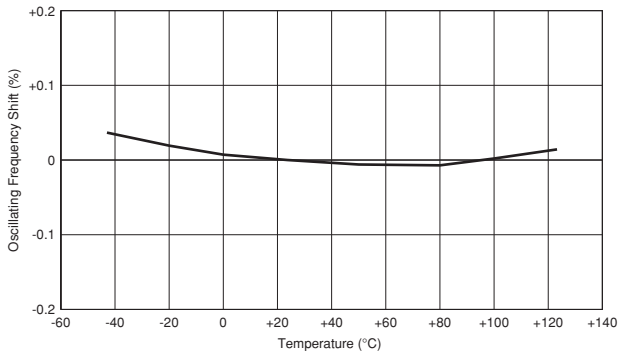

CSTCW_X11

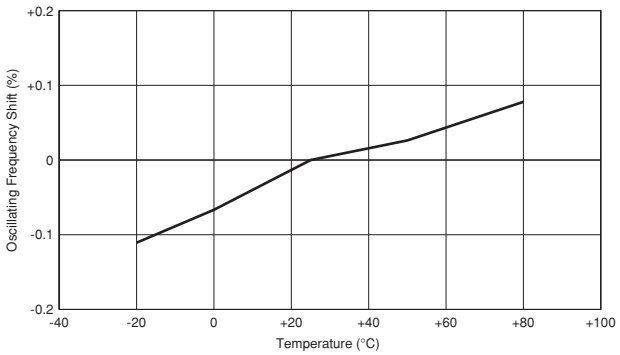

Application Circuits Utilization

■ M66291GP (Renesas)

USB Transceiver

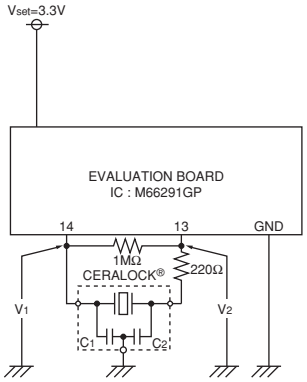

CERALOCK®: CSTCR6M00G15□□□-R0
C_1=39pF (Typ.)
C_2=39pF (Typ.)

■ MN102HF74GHL (Panasonic)

16-bit Microcontroller

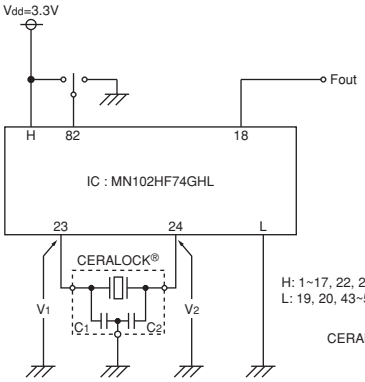

H: 1~17, 22, 25, 26~42, 54, 58~60, 66~81, 83~91
L: 19, 20, 43~53, 55~57, 61~65, 82, 92~100

CERALOCK®: CSTCE12M0G15L□□-R0
C_1=33pF (Typ.)
C_2=33pF (Typ.)

■ LC87F1964A (Sanyo)

8-bit Microcontroller

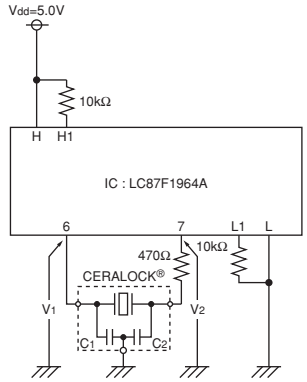

H: 8, 19, 39
L: 5, 20, 40
H1: 31, 33
L1: 29, 30, 32, 34~36

CERALOCK®: CSTCE12M0G15L□□-R0
C_1=33pF (Typ.)
C_2=33pF (Typ.)

■ TUSB2046B (Texas Instruments)

USB 4-port HUB

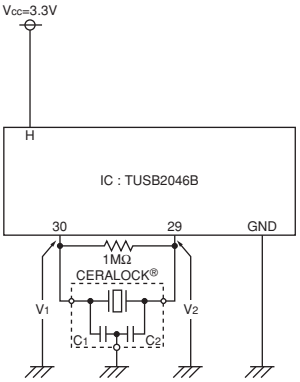

H: 3, 25
L: 7, 28

CERALOCK®: CSTCR6M00G15□□□-R0
C_1=39pF (Typ.)
C_2=39pF (Typ.)

■ ISP1181BDGG (Philips)

USB Controller

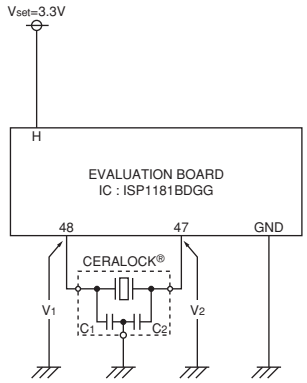

CERALOCK®: CSTCR6M00G15□□□-R0
C_1=39pF (Typ.)
C_2=39pF (Typ.)

Ceramic Resonators (CERALOCK®)

MHz Chip Type -Standard Frequency Tolerance for General Usage-

Chip type CERALOCK(R) with built-in load capacitors provides an extremely small package.
MURATA's package technology expertise has enabled the development of the Chip CERALOCK(R) with built-in load capacitors.
High-density mounting can be realized because of the small package and the elimination of the need for an external load capacitor.

■ Features

1. Oscillation circuits do not require external load capacitors.
2. Available in a wide frequency range.
3. Extremely small and have a low profile.
4. No adjustment is necessary for oscillation circuits.

■ Applications

1. Clock oscillators for microprocessors
2. Small electronic equipment such as handheld phone, digital video camcorder (DVC), digital still camera (DSC), portable audio player, etc.
3. Storage media and memory (HDD, Optical storage device, FDD, Flash memory card, etc.)
4. Office automation equipment (Mobile PC, Mouse, Keyboard, etc.)
5. Audio-visual applications (TV, DVD-HDD recorder, Audio equipment, Remote control, etc.)
6. Home appliances (Air conditioner, Microwave oven, Refrigerator, Washing machine, etc.)

CSTCC_G
2.00-3.99MHz

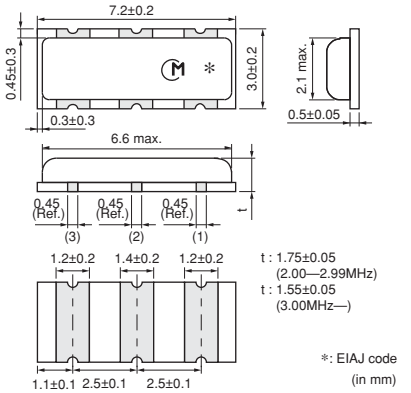

CSTCR_G
4.00-7.99MHz

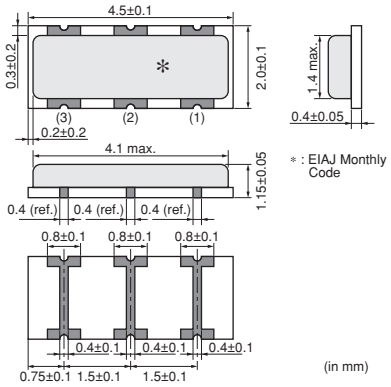

CSTCE_G/CSTCE_G_Z
8.00-13.99MHz

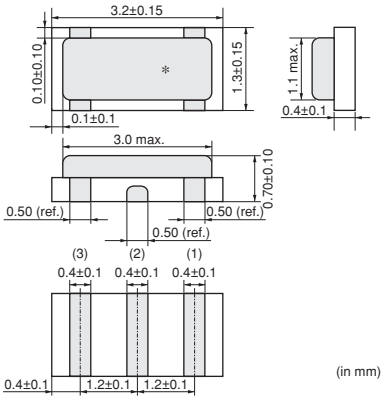

CSTCE_V
14.00-20.00MHz

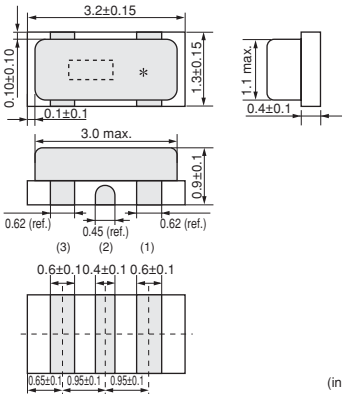

CSTCG_V
20.00-33.86MHz
(Ultra Small)

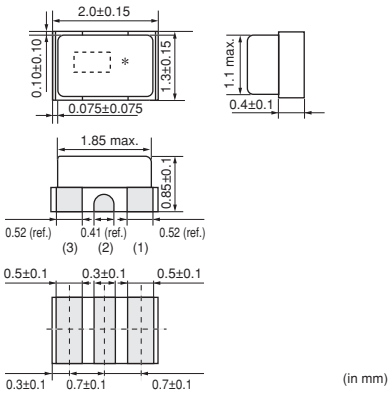

Continued on the following page.

Continued from the preceding page.

CSACW_X
20.01-70.00MHz

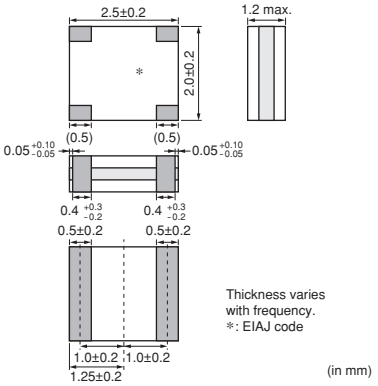

CSTCW_X
20.01-70.00MHz

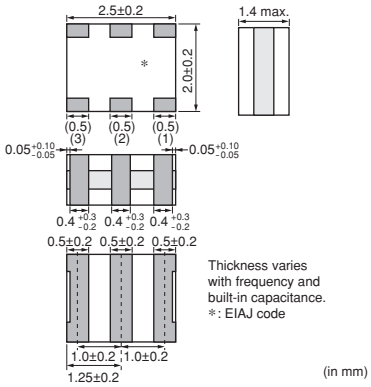

Part Number	Oscillating Frequency (MHz)	Initial Tolerance	Temperature Stability (%)	Temperature Range (°C)
CSTCC_G	2.00 to 3.99	±0.5%	±0.3 [±0.4%:Built-in Capacitance 47pF type within Freq.2.00 to 3.49MHz]	-20 to 80
CSTCR_G	4.00 to 7.99	±0.5%	±0.2	-20 to 80
CSTCE_G	8.00 to 13.99	±0.5%	±0.2	-20 to 80
CSTCE_G_Z	8.00 to 13.99	±0.5%	±0.2	-40 to 125
CSTCE_V	14.00 to 20.00	±0.5%	±0.3	-20 to 80
CSTCG_V	20.00 to 33.86	±0.5%	±0.3	-20 to 80
CSACW_X	20.01 to 70.00	±0.5%	±0.2	-20 to 80
CSTCW_X	20.01 to 70.00	±0.5%	±0.2	-20 to 80

Irregular or stopped oscillation may occur under unmatched circuit conditions. Please check the actual conditions prior to use.

■ Oscillation Frequency Measuring Circuit

CSTCR_G/CSTCE_G/CSTCE_G_Z/CSTCE_V/CSTCG_V

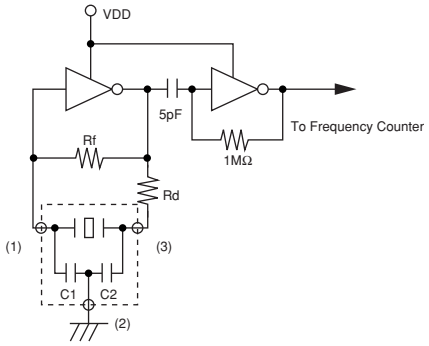

CSTCC_G/CSTCW_X

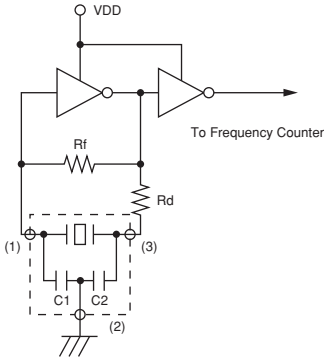

CSACW_X

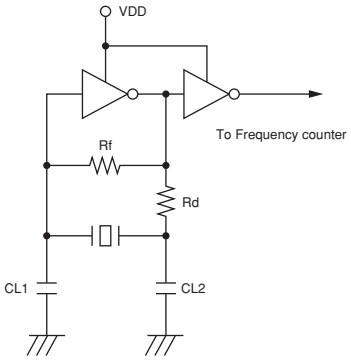

■ Standard Land Pattern Dimensions

CSTCC_G

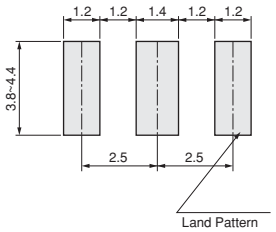

(in mm)

CSTCR_G
(* This Land Pattern is not common to CSTCR_G15C, CSTCR_G15L, CSTCR_GH5L.)

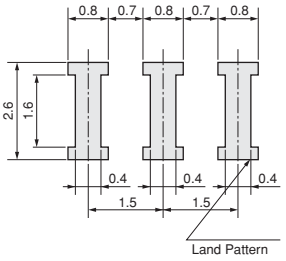

(in mm)

CSTCE_G/CSTCE_G_Z

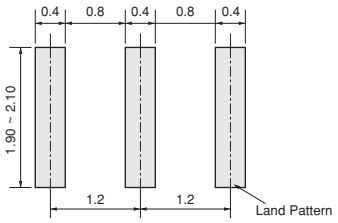

(in mm)

CSTCE_V
(* This Land Pattern is not common to CSTCE_V13C, CSTCE_V_C, CSTCE_V13L, CSTCE_VH3L.)

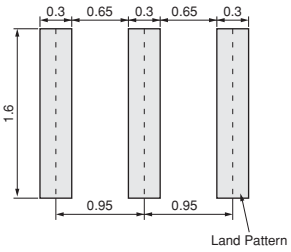

(in mm)

CSTCG_V

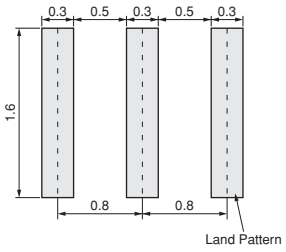

(in mm)

CSACW_X

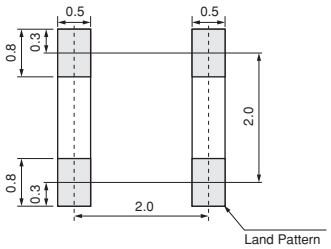

(in mm)

CSTCW_X

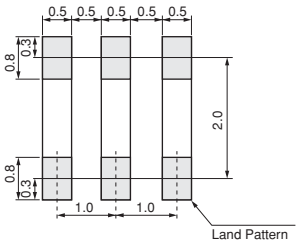

(in mm)

■ Oscillation Frequency Temperature Stability

CSTCC_G

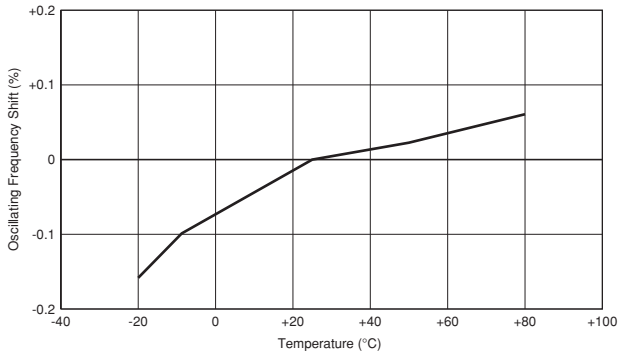

CSTCR_G

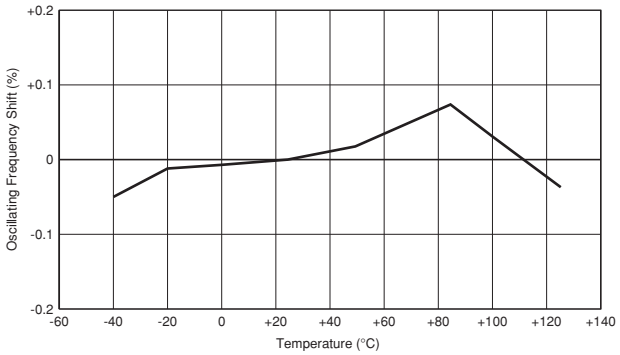

CSTCE_G/CSTCE_G_Z

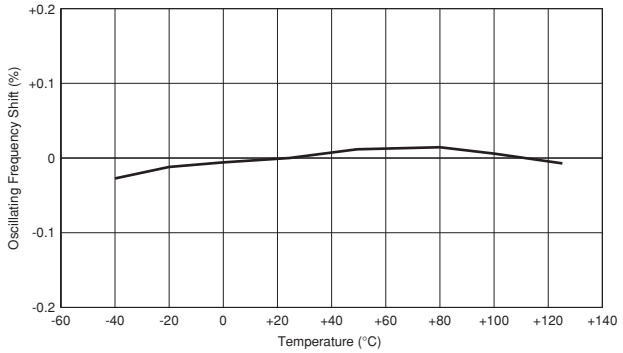

CSTCE_V

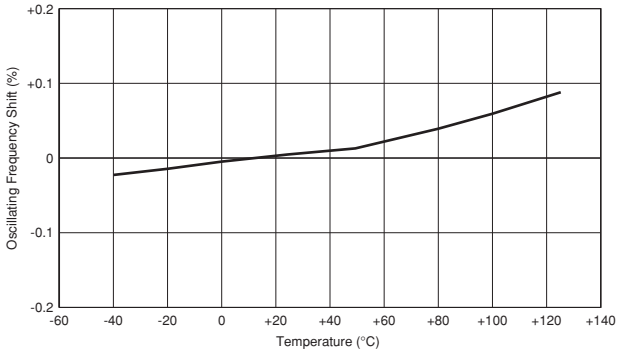

CSTCG_V

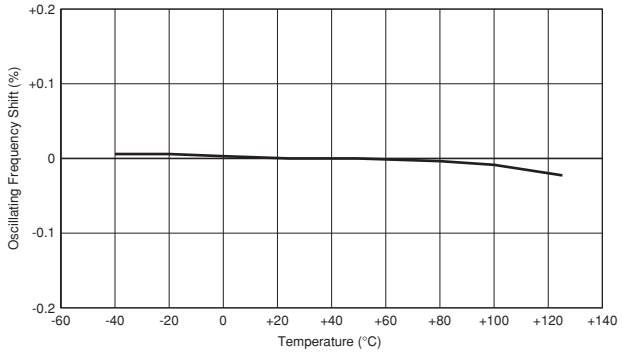

CSACW_X

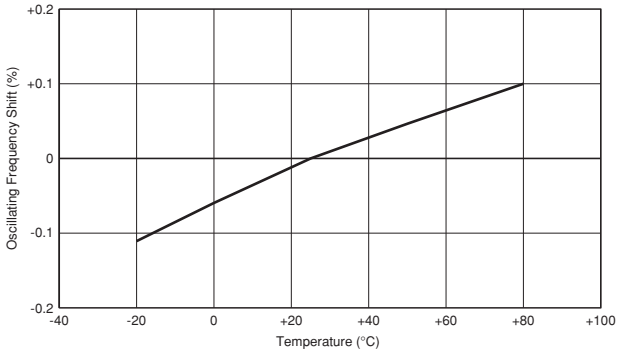

CSTCW_X

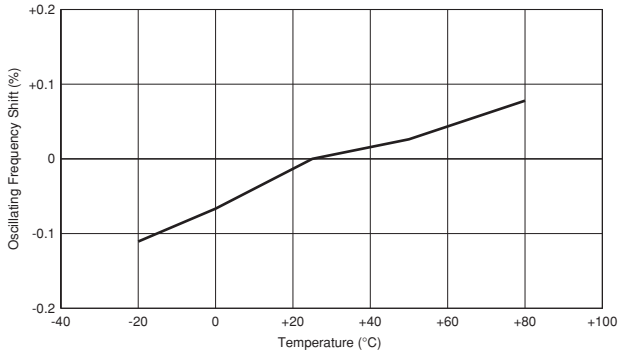

Application Circuits Utilization

■ μPD78F0533GB (Renesas)

8-bit Microcomputer

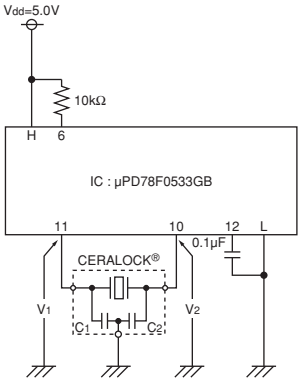

H: 15, 16, 47
L: 9, 13, 14, 48

CERALOCK®: CSTCR4M00G55-R0
C_1=39pF (Typ.)
C_2=39pF (Typ.)

■ TMP19A43FDXBG (Toshiba)

32-bit Microcomputer

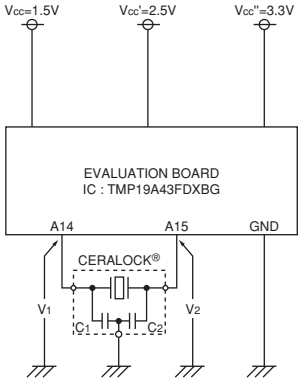

Xin: A14
Xout: A15

CERALOCK®: CSTCE10M0G52-R0
C_1=10pF (Typ.)
C_2=10pF (Typ.)

■ MN103SFC2D (Panasonic)

32-bit Microcomputer

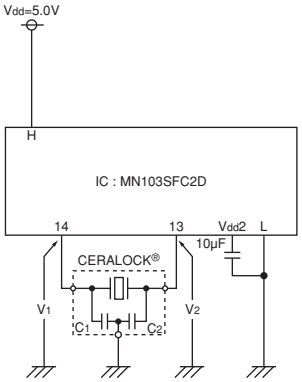

H: 9, 17, 34
L: 7, 15, 36
Vdd2: 16, 38

CERALOCK®: CSTCR5M00G55Z-R0
C_1=39pF (Typ.)
C_2=39pF (Typ.)

■ MB95F128H (Fujitsu)

8-bit Microcomputer

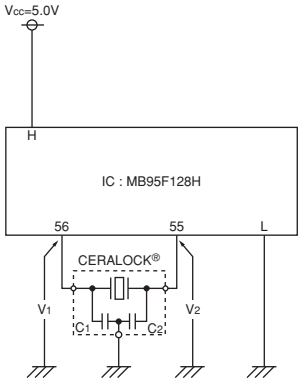

H: 3, 28, 51, 79
L: 4, 29, 54, 57

CERALOCK®: CSTCE8M00G52-R0
C_1=10pF (Typ.)
C_2=10pF (Typ.)

■ PIC16F716-I/SO (Microchip)

8-bit Microcomputer

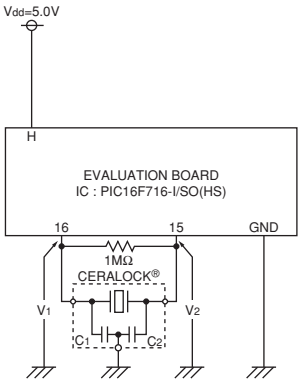

CERALOCK®: CSTCE12M0G52-R0
C_1=10pF (Typ.)
C_2=10pF (Typ.)

■ HD64F36077GH (Renesas)

16-bit Microcomputer

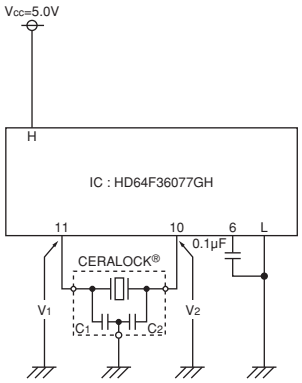

H: 3, 7, 12
L: 8, 9

CERALOCK®: CSTCE8M00G52-R0
C_1=10pF (Typ.)
C_2=10pF (Typ.)

Continued on the following page. ↗

Application Circuits Utilization

Continued from the preceding page.

■ μPD70F3215HYGC (Renesas)

32-bit Microcomputer

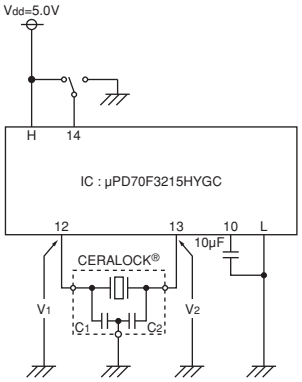

H: 1, 5, 9, 34, 70
L: 2, 8, 11, 33, 69

CERALOCK®: CSTCR5M00G55-R0
C_1=39pF (Typ.)
C_2=39pF (Typ.)

■ ATmega128 (Atmel)

8-bit Microcomputer

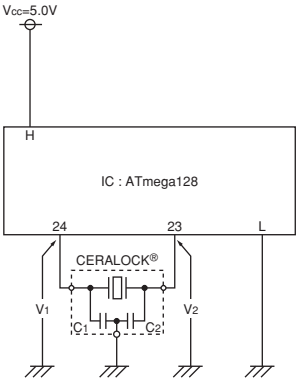

H: 21, 52, 64
L: 22, 53, 63

CERALOCK®: CSTCE8M00G52-R0
C_1=10pF (Typ.)
C_2=10pF (Typ.)

■ ST7FLITE29F2B6 (ST Microelectronics)

8-bit Microcomputer

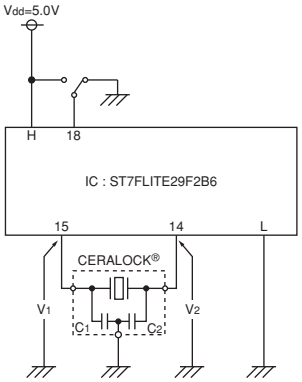

H: 17
L: 16

CERALOCK®: CSTCE16M0V53-R0
C_1=15pF (Typ.)
C_2=15pF (Typ.)

■ TMS320F2810PBKA (Texas Instruments)

32-bit Microcomputer

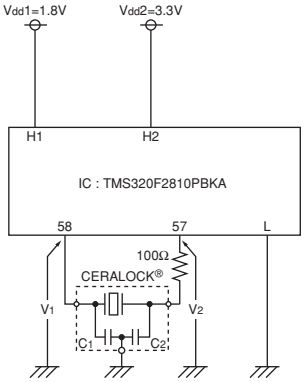

H1: 20, 29, 42, 56, 63, 74, 82, 94, 99, 100, 102, 110, 114
H2: 1, 13, 14, 25, 49, 52, 83, 104, 118
L: 12, 15, 17, 26, 30, 39, 53, 59, 62, 73, 88, 95, 103, 109, 115, 117, 128

CERALOCK®: CSTCE15M0V53-R0
C_1=15pF (Typ.)
C_2=15pF (Typ.)

Ceramic Resonators (CERALOCK®)

MHz Lead Type -Standard Frequency Tolerance for General Usage-

MURATA's ceramic resonator, CERALOCK(R) with built-in load capacitors, has been widely applied as the most suitable component for clock oscillators in a broad range of microprocessors.
The CSTLS series can be used in the design of oscillation circuits not requiring external load capacitors, enabling both high-density mounting and cost reduction.

CSTLS_G
3.40-10.00MHz

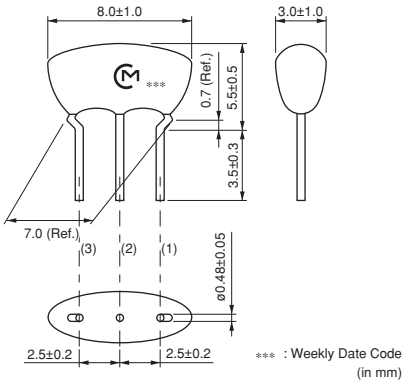

CSTLS_X
16.00-70.00MHz

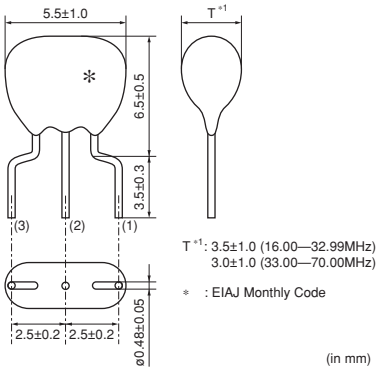

■ Features

1. Oscillation circuits do not require external load capacitors.
   There is some variation in built-in capacitance values applicable to various ICs.
2. Stable over a wide temperature range.
3. Compact, lightweight and exhibit superior shock resistance performance.
4. Enable the design of oscillator circuits requiring no adjustment.
5. Cost-effective and reliable availability

■ Applications

1. DTMF generators
2. Clock oscillators for microcomputers
3. Remote control units
4. Automated office equipment

Part Number	Oscillating Frequency (MHz)	Initial Tolerance	Temperature Stability (%)	Temperature Range (°C)
CSTLS_G	3.40 to 10.00	±0.5%	±0.2 [-0.4% to +0.2%:Built-in Capacitance 47pF type]	-20 to 80
CSTLS_X	16.00 to 70.00	±0.5%	±0.2	-20 to 80

Irregular or stopped oscillation may occur under unmatched circuit conditions. Please check the actual conditions prior to use.
The order quantity should be an integral multiple of the "Minimum Quantity" shown in the packaging page.

■ Oscillation Frequency Measuring Circuit

CSTLS_G/CSTLS_X

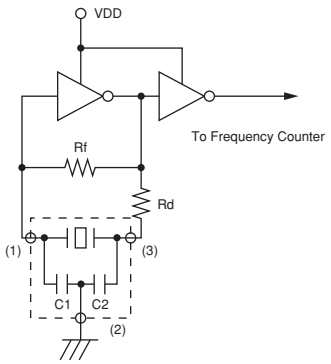

■ Oscillation Frequency Temperature Stability

CSTLS_G

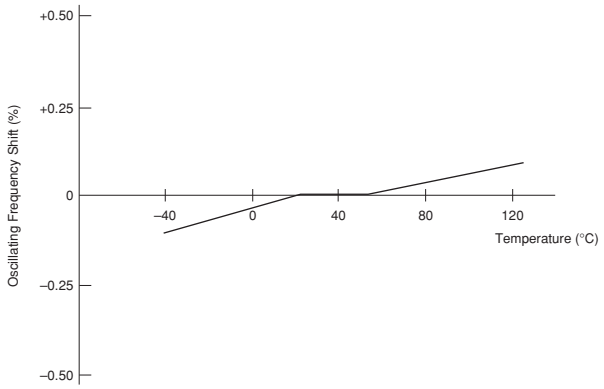

CSTLS_X

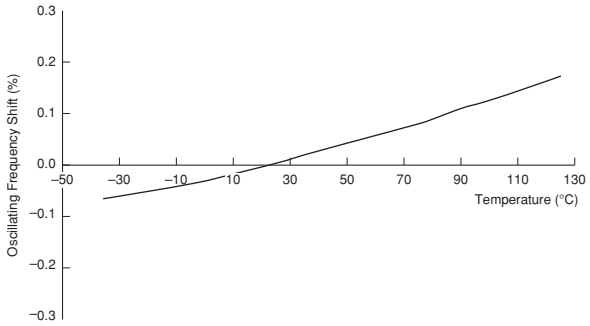

Application Circuits Utilization

■ M38235G6HP (Renesas)

8-bit Microcomputer

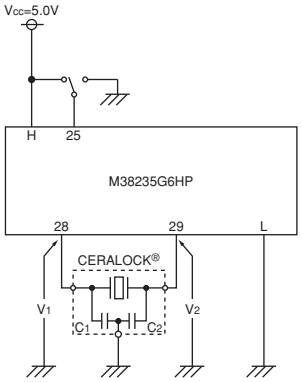

H: 71
L: 30, 73

CERALOCK®: CSTLS8M00G53-B0
C_1=15pF (Typ.)
C_2=15pF (Typ.)

■ LC87F5G32A (Sanyo)

8-bit Microcomputer

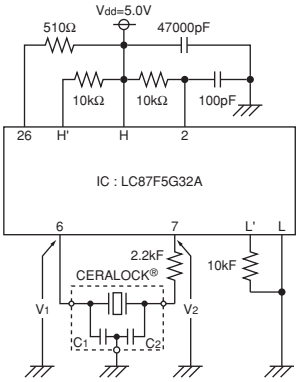

H: 8, 19, 39
L: 5, 20, 40
H': 29, 31, 35
L': 30, 32~34, 36

CERALOCK®: CSTLS5M00G53-B0
C_1=15pF (Typ.)
C_2=15pF (Typ.)

Notice for General Usage -MHz Chip Type-

■ Soldering and Mounting (CSTCC Series)

1. Soldering

(1) Reflow soldering

Please mount component on a circuit board by reflow soldering. Flow soldering is not acceptable.

Recommendable Flux and Solder

Flux	Please use rosin based flux, not water soluble flux.
Solder	Please use solder (Sn-3.0Ag-0.5Cu) under the following conditions: Standard thickness of soldering paste: 0.10 to 0.15mm.

Recommendable Soldering Profile

Pre-heating	150 to 180°C	60 to 120s
Heating	220°C min.	30 to 60s
Peak Temperature	upper limit: 260°C lower limit: 245°C	1s max. 5s max.

Temperature shall be measured on the surface of component.

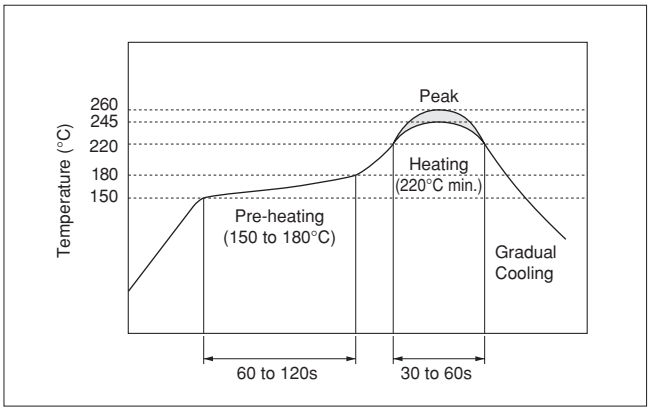

(2) Soldering with Iron

If compelled to mount the component by using soldering iron, please do not directly touch the component with the soldering iron. The component terminals or electrical characteristics may be damaged if excessive thermal stress is applied.

Recommendable Soldering with Iron

Heating of the soldering iron	350°C max.
Watt	30W max.
Shape of the soldering iron	ø3mm max.
Soldering Time	5s max. at one terminal
Solder	Sn-3.0Ag-0.5Cu

(3) Solder Volume

Please make the solder volume less than the height of the substrate to avoid damage to the seal between the metal cap and the substrate.

(4) Other

Do not reuse components removed from a circuit board after soldering.

(5) Conditions for Placement Machines

The component is recommended with placement machines that employ optical placement capabilities. The component may be damaged by excessive mechanical force. Please make sure that you have evaluated by using placement machines before going into mass production. Do not use placement machines that utilize mechanical positioning. Please contact Murata for details beforehand.

Continued on the following page. ↗

Notice for General Usage -MHz Chip Type-

Continued from the preceding page.

2. Wash

Some series do not withstand washing.
Please check the list at right before use.

Series	Wash
CSTCC (2.00 to 3.49MHz)	Not Available
CSTCC (3.50 to 3.99MHz)	Available

(1) Cleaning Solvents
HCFC, Isopropanol, Tap water, Demineralized water, Cleanthrough750H, Pine alpha 100S, Techno care FRW

(2) Temperature Difference : dT *1
dT≦60°C (dT=Component-solvent)
*1 ex. If the component is immersed at +90°C into cleaning solvent at +60°C, then dT=30°C.

(3) Conditions
(a) Ultrasonic Wash
1 minute max. in above solvent at +60°C max.
(Frequency: 28kHz, Output: 20W/l)
(b) Immersion Wash
5 minutes max. in above solvent at +60°C max.
(c) Shower or Rinse Wash
5 minutes max. in above solvent at +60°C max.

(4) Drying
5 minutes max. by air blowing at +80°C max.

(5) Other
(a) Total washing time should be within 10 minutes.
(b) The component may be damaged if it is washed with chlorine, petroleum, or alkali cleaning solvent.

3. Coating

Conformal coating of the component is acceptable. However, the resin material, curing temperature, and other process conditions should be evaluated to confirm stable electrical characteristics are maintained.

Notice for General Usage -MHz Chip Type-

■ Soldering and Mounting (CSTCR/CSTCE_V/CSTCG/CSTCE_G Series)

1. Soldering

(1) Reflow soldering

Please mount component on a circuit board by reflow soldering. Flow soldering is not acceptable.

Recommendable Flux and Solder

Flux	Please use rosin based flux, not water soluble flux.
Solder	Please use solder (Sn-3.0Ag-0.5Cu) under the following conditions: Standard thickness of soldering paste: 0.10 to 0.15mm.

Recommendable Soldering Profile

Pre-heating	150 to 180°C	60 to 120s
Heating	220°C min.	30 to 60s
Peak Temperature	upper limit: 260°C lower limit: 245°C	1s max. 5s max.

Temperature shall be measured on the surface of component.

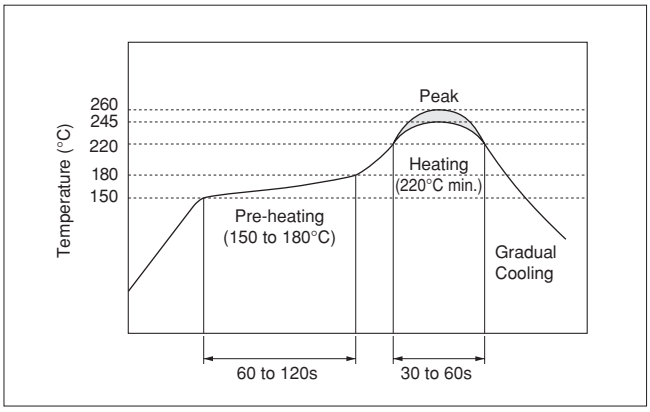

(2) Soldering with Iron

If compelled to mount the component by using soldering iron, please do not directly touch the component with the soldering iron. The component terminals or electrical characteristics may be damaged if excessive thermal stress is applied.

Recommendable Soldering with Iron

Heating of the soldering iron	350°C max.
Watt	30W max.
Shape of the soldering iron	ø3mm max.
Soldering Time	5s max. at one terminal
Solder	Sn-3.0Ag-0.5Cu

(3) Solder Volume

Please make the solder volume less than the height of the substrate to avoid damage to the seal between the metal cap and the substrate.

(4) Other

Do not reuse components removed from a circuit board after soldering.

(5) Conditions for Placement Machines

The component is recommended with placement machines that employ optical placement capabilities. The component may be damaged by excessive mechanical force. Please make sure that you have evaluated by using placement machines before going into mass production. Do not use placement machines that utilize mechanical positioning. Please contact Murata for details beforehand.

2. Washing / Coating

Conformal coating or washing of the component is not acceptable, because it is not hermetically sealed.
Please contact us if you need a washable component.

Continued on the following page.

Continued from the preceding page.

■ Soldering and Mounting (CSACW/CSTCW Series)

1. Soldering

(1) Reflow soldering

Please mount component on a circuit board by reflow soldering. Flow soldering is not acceptable.

Recommendable Flux and Solder

Flux	Please use rosin based flux, not water soluble flux.
Solder	Please use solder (Sn-3.0Ag-0.5Cu) under the following conditions: Standard thickness of soldering paste: 0.10 to 0.15mm.

Recommendable Soldering Profile

Pre-heating	150 to 180°C	60 to 120s
Heating	220°C min.	30 to 60s
Peak Temperature	upper limit: 260°C lower limit: 245°C	1s max. 5s max.

Temperature shall be measured on the surface of component.

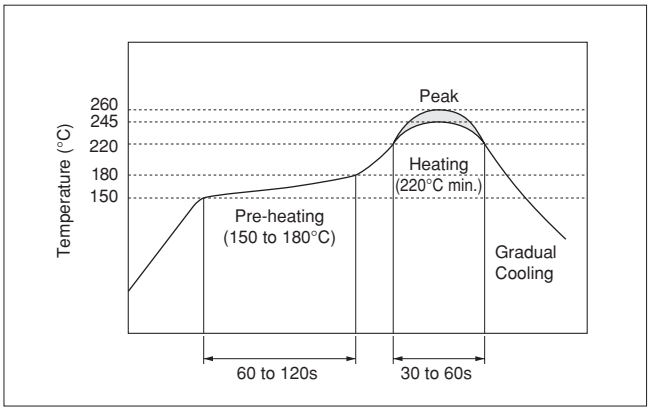

(2) Soldering with Iron

If compelled to mount the component by using soldering iron, please do not directly touch the component with the soldering iron. The component terminals or electrical characteristics may be damaged if excessive thermal stress is applied.

Recommendable Soldering with Iron

Heating of the soldering iron	350°C max.
Watt	30W max.
Shape of the soldering iron	ø3mm max.
Soldering Time	5s max. at one terminal
Solder	Sn-3.0Ag-0.5Cu

(3) Other

Do not reuse components removed from a circuit board after soldering.

(4) Conditions for Placement Machines

The component is recommended with placement machines that employ optical placement capabilities. The component may be damaged by excessive mechanical force. Please make sure that you have evaluated by using placement machines before going into mass production. Do not use placement machines that utilize mechanical positioning. Please contact Murata for details beforehand.

2. Washing / Coating

Conformal coating or washing of the component is not acceptable, because it is not hermetically sealed.
Please contact us if you need a washable component.

Notice for General Usage -MHz Chip Type-

■ Storage and Operating Conditions

1. Product Storage Conditions
   Please store the products in a room where the temperature/humidity is stable, and avoid such places where there are large temperature changes. Please store the products under the following conditions:
   Temperature: -10 to +40°C
   Humidity: 15 to 85% R.H.
2. Expiration Date on Storage
   Expiration date (Shelf life) of the products is six months after delivery under the conditions of a sealed and unopened package. Please use the products within six months after delivery. If you store the products for a long time (more than six months), use carefully because the products may be degraded in solderability and/or rusty.
   Please confirm solderability and characteristics for the products regularly.
3. Notice on Product Storage
   (1) Please do not store the products in a chemical atmosphere (Acids, Alkali, Bases, Organic gas, Sulfides and so on), because the characteristics may be reduced in quality, and/or be degraded in the solderability due to the storage in a chemical atmosphere.
   (2) Please do not put the products directly on the floor without anything under them to avoid damp and/or dusty places.
   (3) Please do not store the products in places such as: in a damp heated place, in a place where direct sunlight comes in, in a place applying vibrations.
   (4) Please use the products immediately after the package is opened, because the characteristics may be reduced in quality, and/or be degraded in the solderability due to storage under the poor conditions.
   (5) Please do not drop the products to avoid cracking of ceramic elements.
4. Other
   Conformal coating or washing of the component is not acceptable because it is not hermetically sealed.
   Please be sure to consult with our sales representatives or engineers whenever and prior to using the products.

■ Rating

The component may be damaged if excessive mechanical stress is applied.

■ Handling

"CERALOCK" may stop oscillating or oscillate irregularly under improper circuit conditions.

Notice for General Usage -MHz Lead Type-

■ Soldering and Mounting

The component cannot withstand washing.
Please do not apply excessive mechanical stress to the component and lead terminals during soldering.

■ Storage and Operating Conditions

1. Product Storage Conditions
   Please store the products in a room where the temperature/humidity is stable, and avoid such places where there are large temperature changes. Please store the products under the following conditions:
   Temperature: -10 to +40°C
   Humidity: 15 to 85% R.H.
2. Expiration Date on Storage
   Expiration date (Shelf life) of the products is six months after delivery under the conditions of a sealed and unopened package. Please use the products within six months after delivery. If you store the products for a long time (more than six months), use carefully because the products may be degraded in solderability and/or rusty.
   Please confirm solderability and characteristics for the products regularly.
3. Notice on Product Storage
   (1) Please do not store the products in a chemical atmosphere (Acids, Alkali, Bases, Organic gas, Sulfides and so on), because the characteristics may be reduced in quality, and/or be degraded in the solderability due to the storage in a chemical atmosphere.
   (2) Please do not put the products directly on the floor without anything under them to avoid damp and/or dusty places.
   (3) Please do not store the products in places such as: in a damp heated place, in a place where direct sunlight comes in, in a place applying vibrations.
   (4) Please use the products immediately after the package is opened, because the characteristics may be reduced in quality, and/or be degraded in the solderability due to storage under the poor conditions.
   (5) Please do not drop the products to avoid cracking of ceramic elements.
4. Other
   Conformal coating or washing of the component is not acceptable because it is not hermetically sealed.
   Please be sure to consult with our sales representatives or engineers whenever and prior to using the products.

■ Rating

The component may be damaged if excessive mechanical stress is applied.

■ Handling

"CERALOCK" may stop oscillating or oscillate irregularly under improper circuit conditions.

Packaging for General Usage -MHz Chip Type-

■ Minimum Quantity

Part Number	Plastic Tape ø180mm	Plastic Tape ø330mm	Bulk	Dimensions
CSTCC_G	2,000	6,000	500	a
CSTCR_G	3,000	9,000	500	a
CSTCR_G15L	3,000	9,000	500	a
CSTCR_GH5L	3,000	9,000	500	b
CSTCE_G	3,000	9,000	500	b
CSTCE_G15L	3,000	9,000	500	b
CSTCE_GH5L	3,000	9,000	500	b
CSTCE_V	3,000	9,000	500	b
CSTCE_V13L	3,000	9,000	500	b
CSTCE_VH3L	3,000	9,000	500	b
CSTCG_V	3,000	9,000	500	b
CSTCW_X	3,000	9,000	500	b
CSTCW_X11	3,000	9,000	500	b
CSACW_X	3,000	9,000	500	b

The order quantity should be an integral multiple of the "Minimum Quantity" shown above. (pcs.)

■ Dimensions of Reel

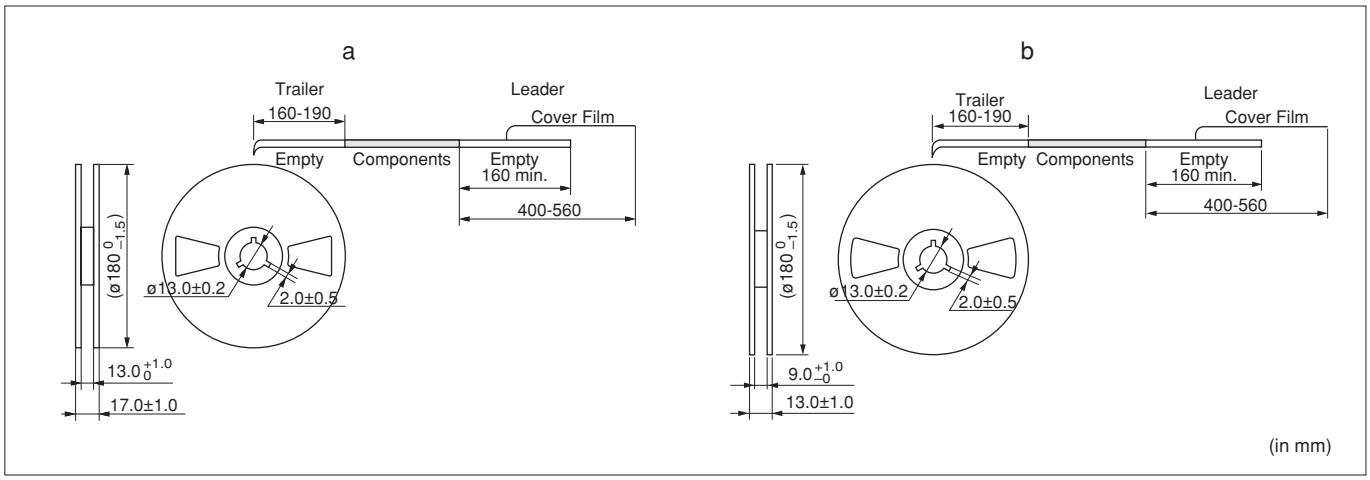

■ Dimensions of Taping

CSTCR_G15L/CSTCR_GH5L

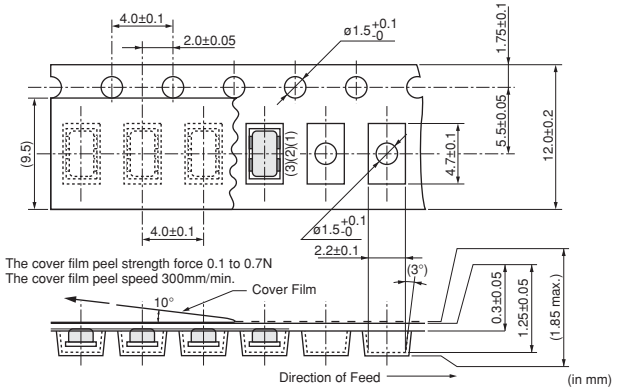

CSTCE_G15L/CSTCE_GH5L

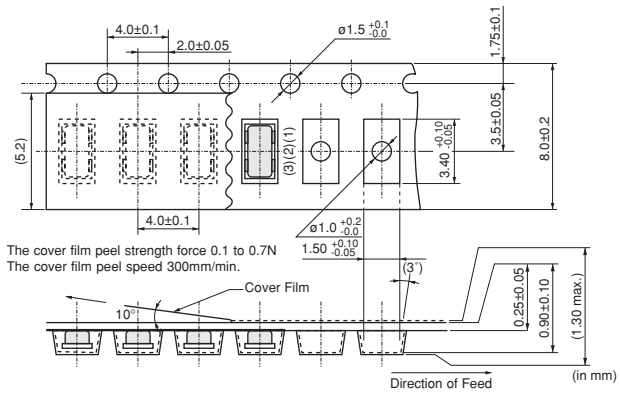

Continued on the following page. ↗

Packaging for General Usage -MHz Chip Type-

Continued from the preceding page.

■ Dimensions of Taping

CSTCE_V13L/CSTCE_VH3L

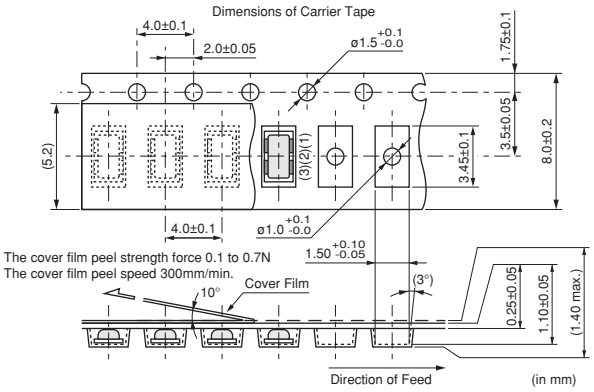

CSTCW_X11

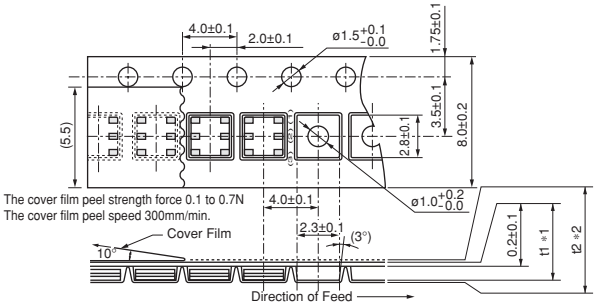

*1, *2: Dimensions vary with product thickness of CERALOCK®.

Thickness of CERALOCK®		1.40–1.20	1.15–1.00	0.95–0.90
t1	*1	1.48±0.1	1.30±0.1	1.12±0.1
t2	*2	2.1 max.	1.9 max.	1.7 max.

(in mm)

CSTCC_G

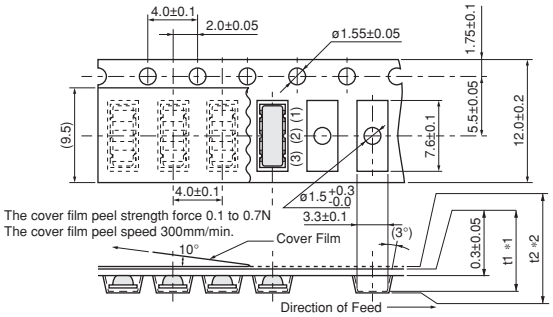

*1, *2: Dimensions vary with frequency range of CERALOCK®.

Frequency Range		2.00–2.99MHz	3.00–3.99MHz
t1	*1	1.85±0.05	1.65±0.05
t2	*2	2.45 max.	2.25 max.

(in mm)

CSTCR_G

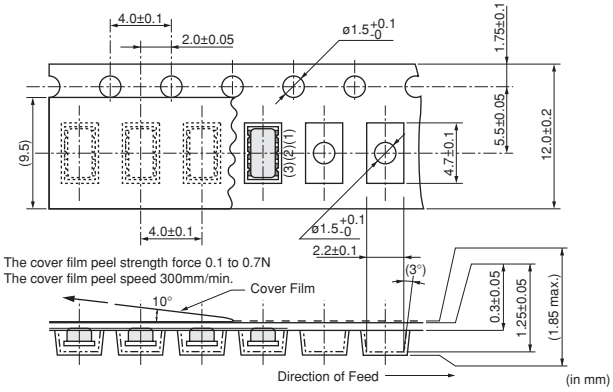

CSTCE_G

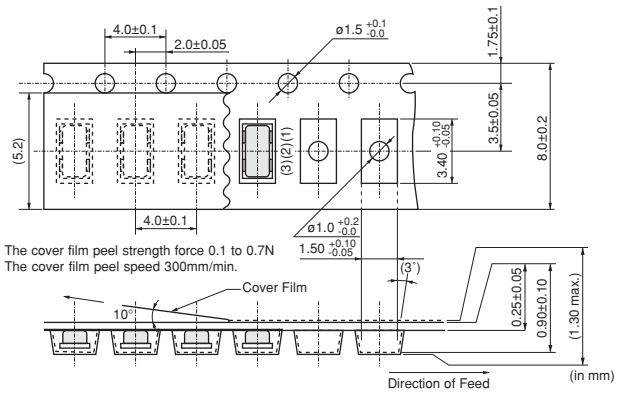

CSTCE_V

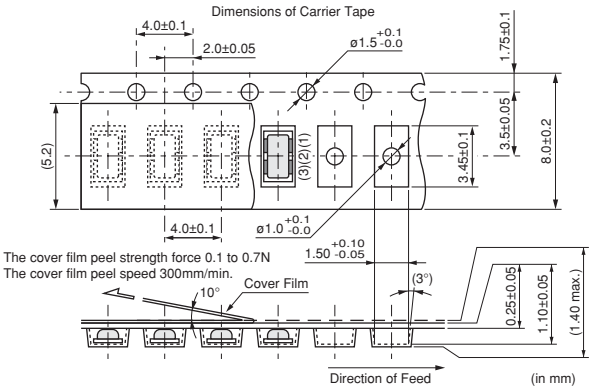

CSTCG_V

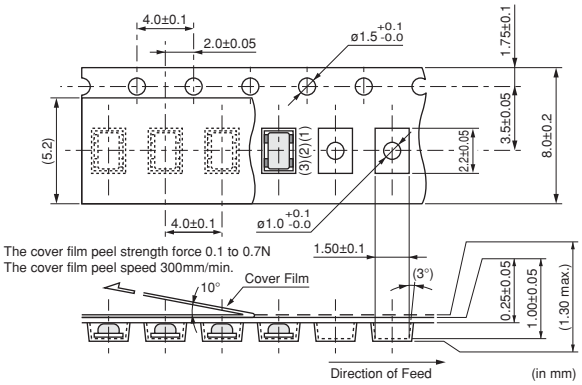

CSACW_X

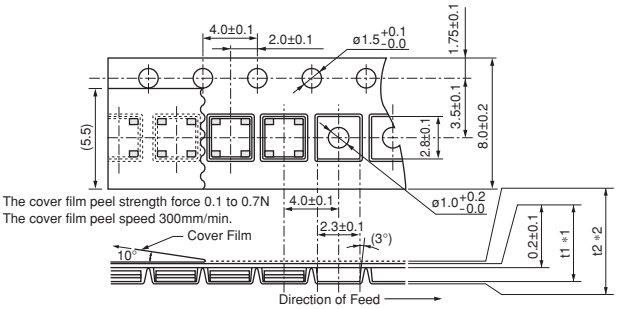

*1, *2: Dimensions vary with product thickness of CERALOCK®.

Thickness of CERALOCK®		1.40–1.20	1.15–1.00	0.95–0.90
t1	*1	1.48±0.1	1.30±0.1	1.12±0.1
t2	*2	2.1 max.	1.9 max.	1.7 max.

(in mm)

Continued on the following page.

Packaging for General Usage -MHz Chip Type-

Continued from the preceding page.

■ Dimensions of Taping

CSTCW_X

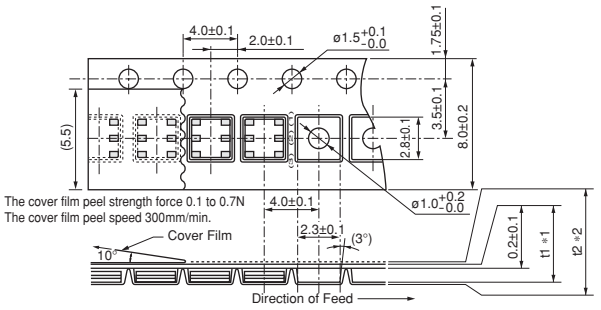

*1, *2: Dimensions vary with product thickness of CERALOCK®.

Thickness of CERALOCK®		1.40–1.20	1.15–1.00	0.95–0.90
t1	*1	1.48±0.1	1.30±0.1	1.12±0.1
t2	*2	2.1 max.	1.9 max.	1.7 max.

(in mm)

Packaging for General Usage -MHz Lead Type-

■ Minimum Quantity

Part Number	Ammo Pack	Bulk
CSTLS_G (3.40 to 10.0MHz)	2,000	500
CSTLS_X (16.00 to 70.00MHz)	2,000	500

The order quantity should be an integral multiple of the "Minimum Quantity" shown above. (pcs.)

■ Tape Dimensions of CSTLS_G

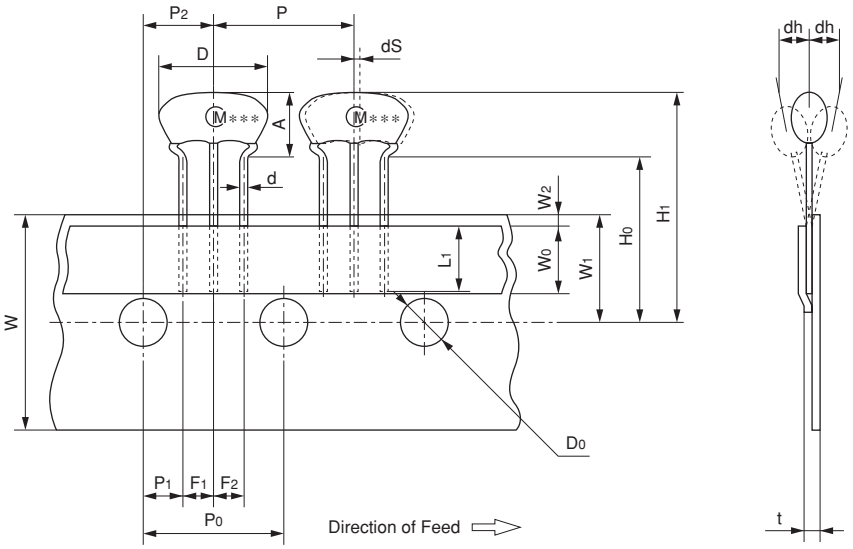

Item	Code	Dimensions	Tolerance	Remarks
Width of diameter	D	8.0	±1.0	
Height of resonator	A	5.5	±0.5	
Dimensions of terminal	d	ø0.48	±0.05	
Lead length under the hold down tape	L_1	5.0 min.	–	
Pitch of component	P	12.7	±0.5	Tolerance for Pitches 10xP_0=127±1
Pitch of sprocket hole	P_0	12.7	±0.2	
Length from sprocket hole center to lead	P_1	3.85	±0.5	
Length from sprocket hole center to component center	P_2	6.35	±0.5	
Lead spacing (I)	F_1	2.5	±0.2	
Lead spacing (II)	F_2	2.5	±0.2	
Slant forward or backward	dh	0	±1.0	1mm max.
Width of carrier tape	W	18.0	±0.5	
Width of hold down tape	W_0	6.0 min.	–	Hold down tape does not exceed the carrier tape.
Position of sprocket hole	W_1	9.0	±0.5	
Gap of hold down tape and carrier tape	W_2	0	$^{+0.5}_{-0}$	
Distance between the center of sprocket hole and lead stopper	H_0	18.0	±0.5	
Total height of resonator	H_1	23.5	±1.0	
Diameter of sprocket hole	D_0	ø4.0	±0.2	
Total tape thickness	t	0.6	±0.2	
Body tilt	dS	0	±1.0	

(in mm)

Continued on the following page.

Packaging for General Usage -MHz Lead Type-

Continued from the preceding page.

■ Tape Dimensions of CSTLS_X

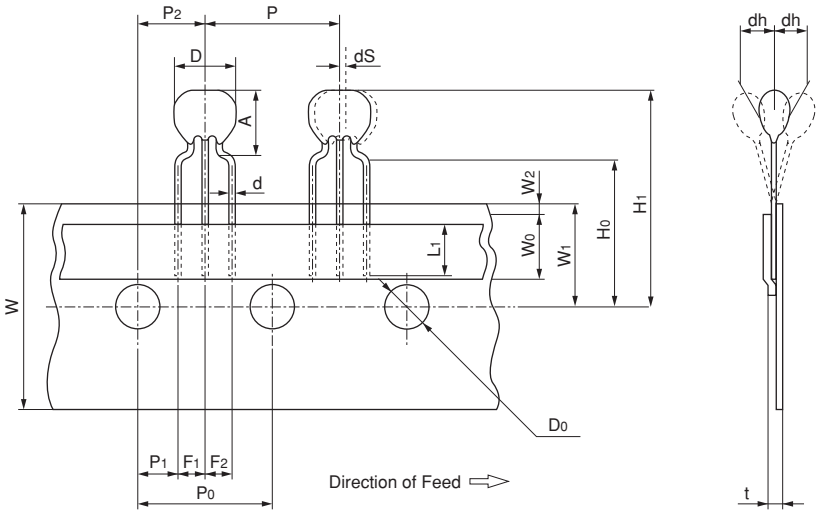

Item	Code	Dimensions	Tolerance	Remarks
Width of diameter	D	5.5	±1.0	
Height of resonator	A	6.5	±0.5	
Dimensions of terminal	d	ø0.48	±0.05	
Lead length under the hold down tape	L_1	5.0 min.	–	
Pitch of component	P	12.7	±0.5	Tolerance for Pitches 10xP_0=127±1
Pitch of sprocket hole	P_0	12.7	±0.2	
Length from sprocket hole center to lead	P_1	3.85	±0.5	
Length from sprocket hole center to component center	P_2	6.35	±0.5	
Lead spacing (I)	F_1	2.5	±0.2	
Lead spacing (II)	F_2	2.5	±0.2	
Slant forward or backward	dh	0	±1.0	1mm max.
Width of carrier tape	W	18.0	±0.5	
Width of hold down tape	W_0	6.0 min.	–	Hold down tape does not exceed the carrier tape.
Position of sprocket hole	W_1	9.0	±0.5	
Gap of hold down tape and carrier tape	W_2	0	$^{+0.5}_{-0.0}$	
Distance between the center of sprocket hole and lead stopper	H_0	18.0	±0.5	
Total height of resonator	H_1	24.5	±1.0	
Diameter of sprocket hole	D_0	ø4.0	±0.2	
Total tape thickness	t	0.6	±0.2	
Body tilt	dS	0	±1.0	

(in mm)

⚠Note:

1. Export Control
   <For customers outside Japan>
   No Murata products should be used or sold, through any channels, for use in the design, development, production, utilization, maintenance or operation of, or otherwise contribution to (1) any weapons (Weapons of Mass Destruction [nuclear, chemical or biological weapons or missiles] or conventional weapons) or (2) goods or systems specially designed or intended for military end-use or utilization by military end-users.
   <For customers in Japan>
   For products which are controlled items subject to the "Foreign Exchange and Foreign Trade Law" of Japan, the export license specified by the law is required for export.
2. Please contact our sales representatives or product engineers before using the products in this catalog for the applications listed below, which require especially high reliability for the prevention of defects which might directly damage a third party's life, body or property, or when one of our products is intended for use in applications other than those specified in this catalog.
   ① Aircraft equipment ② Aerospace equipment
   ③ Undersea equipment ④ Power plant equipment
   ⑤ Medical equipment ⑥ Transportation equipment (vehicles, trains, ships, etc.)
   ⑦ Traffic signal equipment ⑧ Disaster prevention / crime prevention equipment
   ⑨ Data-processing equipment ⑩ Application of similar complexity and/or reliability requirements to the applications listed above
3. Product specifications in this catalog are as of September 2012. They are subject to change or our products in it may be discontinued without advance notice.
   Please check with our sales representatives or product engineers before ordering. If there are any questions,please contact our sales representatives or product engineers.
4. Please read rating and ⚠CAUTION (for storage, operating, rating, soldering, mounting and handling) in this catalog to prevent smoking and/or burning, etc.
5. This catalog has only typical specifications.Therefore, please approve our product specifications or transact the approval sheet for product specifications before ordering.
6. Please note that unless otherwise specified, we shall assume no responsibility whatsoever for any conflict or dispute that may occur in connection with the effect of our and/or a third party's intellectual property rights and other related rights in consideration of your use of our products and/or information described or contained in our catalogs. In this connection, no representation shall be made to the effect that any third parties are authorized to use the rights mentioned above under licenses without our consent.
7. No ozone depleting substances (ODS) under the Montreal Protocol are used in our manufacturing process.

Murata Manufacturing Co., Ltd.

http://www.murata.com/

Head Office
1-10-1, Higashi Kotari, Nagaokakyo-shi, Kyoto 617-8555, Japan
Phone: 81-75-951-9111

International Division
3-29-12, Shibuya, Shibuya-ku, Tokyo 150-0002, Japan
Phone: 81-3-5469-6123 Fax: 81-3-5469-6155 E-mail: intl@murata.co.jp

Компания «ЭлектроПласт» предлагает заключение долгосрочных отношений при поставках импортных электронных компонентов на взаимовыгодных условиях!

Наши преимущества:

- Оперативные поставки широкого спектра электронных компонентов отечественного и импортного производства напрямую от производителей и с крупнейших мировых складов;
- Поставка более 17-ти миллионов наименований электронных компонентов;
- Поставка сложных, дефицитных, либо снятых с производства позиций;
- Оперативные сроки поставки под заказ (от 5 рабочих дней);
- Экспресс доставка в любую точку России;
- Техническая поддержка проекта, помощь в подборе аналогов, поставка прототипов;
- Система менеджмента качества сертифицирована по Международному стандарту ISO 9001;
- Лицензия ФСБ на осуществление работ с использованием сведений, составляющих государственную тайну;
- Поставка специализированных компонентов (Xilinx, Altera, Analog Devices, Intersil, Interpoint, Microsemi, Aeroflex, Peregrine, Syfer, Eurofarad, Texas Instrument, Miteq, Cobham, E2V, MA-COM, Hittite, Mini-Circuits,General Dynamics и др.);

Помимо этого, одним из направлений компании «ЭлектроПласт» является направление «Источники питания». Мы предлагаем Вам помощь Конструкторского отдела:

- Подбор оптимального решения, техническое обоснование при выборе компонента;
- Подбор аналогов;
- Консультации по применению компонента;
- Поставка образцов и прототипов;
- Техническая поддержка проекта;
- Защита от снятия компонента с производства.

Как с нами связаться

Телефон: 8 (812) 309 58 32 (многоканальный)
Факс: 8 (812) 320-02-42
Электронная почта: org@eplast1.ru
Адрес: 198099, г. Санкт-Петербург, ул. Калинина, дом 2, корпус 4, литера А.