Integrated Device Technology, Inc.

4-BIT BUS SWITCH

IDT74FST3125

FEATURES:

- Bus switches provide zero delay paths
- Extended commercial range of –40°C to +85°C
- Low switch on-resistance:
  FST3xxx – 5Ω
- TTL-compatible input and output levels
- ESD > 2000V per MIL-STD-883, Method 3015;
  > 200V using machine model (C = 200pF, R = 0)
- Available in QSOP and SOIC

DESCRIPTION:

The FST3125 belong to IDT's family of Bus switches. Bus switch devices perform the function of connecting or isolating two ports without providing any inherent current sink or source capability. Thus they generate little or no noise of their own while providing a low resistance path for an external driver. These devices connect input and output ports through an n-channel FET. When the gate-to-source junction of this FET is adequately forward-biased the device conducts and the resistance between input and output ports is small. Without adequate bias on the gate-to-source junction of the FET, the FET is turned off, therefore with no VCC applied, the device has hot insertion capability.

The low on-resistance and simplicity of the connection between input and output ports reduces the delay in this path to close to zero.

The FST3125 is a 4-bit TTL-compatible bus switch. The xOE pins provide individual enable control for each of the four bits.

FUNCTIONAL BLOCK DIAGRAM

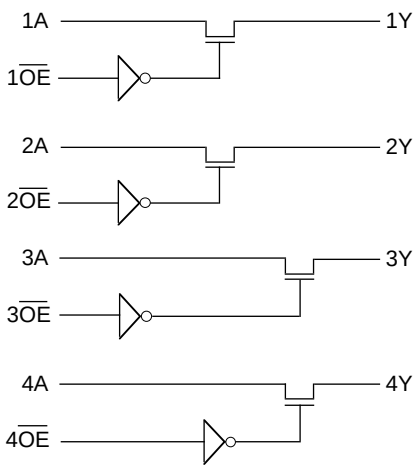

3471 drw 01

PIN CONFIGURATION

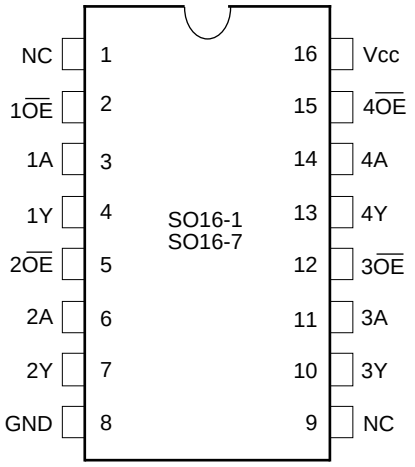

SOIC/QSOP TOP VIEW

3471 drw 02

PIN DESCRIPTION

Pin Names	I/O	Description
1A-4A	I/O	Bus A
1Y-4Y	I/O	Bus B
NC	—	No Connect
1OE, 4OE	I	Bus Switch Enable (Active LOW)

3471 tbl 01

The IDT logo is a registered trademark of Integrated Device Technology, Inc.

©1996 Integrated Device Technology, Inc.

ABSOLUTE MAXIMUM RATINGS(1)

Symbol	Description	Max.	Unit
V_{TERM}(2)	Terminal Voltage with Respect to GND	–0.5 to +7.0	V
T_{STG}	Storage Temperature	–65 to +150	°C
I_{OUT}	Maximum Continuous Channel Current	128	mA

3471 tbl 02

NOTES:
1. Stresses greater than those listed under ABSOLUTE MAXIMUM RATINGS may cause permanent damage to the device. This is a stress rating only and functional operation of the device at these or any other conditions above those indicated in the operational sections of this specification is not implied. Exposure to absolute maximum rating condiitions for extended periods may affect reliability.
2. V_{CC}, Control and Switch terminals.

FUNCTION TABLE

$\overline{OE}$	Y	Description
H	Hi-Z	Disconnect
L	A	Connect

3471 tbl 03

CAPACITANCE(1)

Symbol	Parameter	Conditions(2)	Typ.	Unit
C_{IN}	Control Input Capacitance		4	pF
$C_{I/O}$	Switch Input/Output Capacitance	Switch Off		pF

3471 tbl 04

NOTES:
1. Capacitance is characterized but not tested
2. T_A = 25°C, f = 1MHz, V_{IN} = 0V, V_{OUT} = 0V

DC ELECTRICAL CHARACTERISTICS OVER OPERATING RANGE

Following Conditions Apply Unless Otherwise Specified:
Commercial: T_A = –40°C to +85°C, V_{CC} = 5.0V ±5%

Symbol	Parameter	Test Conditions(1)		Min.	Typ.(2)	Max.	Unit
V_{IH}	Input HIGH Voltage	Guaranteed Logic HIGH for Control Inputs		2.0	—	—	V
V_{IL}	Input LOW Voltage	Guaranteed Logic LOW for Control Inputs		—	—	0.8	V
I_{IH}	Input HIGH Current	V_{CC} = Max.	$V_I = V_{CC}$	—	—	±1	µA
I_{IL}	Input LOW Voltage		V_I = GND	—	—	±1	
I_{OZH}	High Impedance Output Current	V_{CC} = Max.	$V_O = V_{CC}$	—	—	±1	µA
I_{OZL}	(3-State Output pins)		V_O = GND	—	—	±1	
I_{OS}	Short Circuit Current	V_{CC} = Max., V_O = GND(3)		—	300	—	mA
V_{IK}	Clamp Diode Voltage	V_{CC} = Min., I_{IN} = –18mA		—	–0.7	–1.2	V
R_{ON}	Switch On Resistance(4)	V_{CC} = Min. V_{IN} = 0.0V I_{ON} = 30mA		—	5	7	Ω
		V_{CC} = Min. V_{IN} = 2.4V I_{ON} = 15mA		—	10	15	Ω
I_{OFF}	Input/Output Power Off Leakage	V_{CC} = 0V, V_{IN} or $V_O \leq$ 4.5V		—	—	±1	µA
I_{CC}	Quiescent Power Supply Current	V_{CC} = Max., V_{IN} = GND or V_{CC}		—	0.1	3	µA

3471 tbl 05

NOTES:
1. For conditions shown as Max. or Min., use appropriate value specified under Electrical Characteristics for the applicable device type.
2. Typical values are at VCC = 5.0V, +25°C ambient.
3. Not more than one output should be tested at one time. Duration of the test should not exceed one second.
4. Measured by voltage drop between ports at indicated current through the switch.

POWER SUPPLY CHARACTERISTICS

Symbol	Parameter	Test Conditions[1]		Min.	Typ.[2]	Max.	Unit
ΔI_{CC}	Quiescent Power Supply Current TTL Inputs HIGH	V_{CC} = Max. V_{IN} = 3.4V[3]		—	0.5	1.5	mA
I_{CCD}	Dynamic Power Supply Current[4]	V_{CC} = Max. Outputs Open Enable Pin Toggling 50% Duty Cycle	V_{IN} = V_{CC} V_{IN} = GND	—	30	40	µA/ MHz/ Switch
I_C	Total Power Supply Current[6]	V_{CC} = Max. Outputs Open Enable Pin Toggling	V_{IN} = V_{CC} V_{IN} = GND	—	1.2	1.6	mA
		(4 Switches Toggling) fi = 10MHz 50% Duty Cycle	V_{IN} = 3.4 V_{IN} = GND	—	1.5	2.4	

3471 tbl 06

NOTES:
1. For conditions shown as Max. or Min., use appropriate value specified under Electrical Characteristics for the applicable device type.
2. Typical values are at V_{CC} = 5.0V, +25°C ambient.
3. Per TTL driven input (V_{IN} = 3.4V). All other inputs at V_{CC} or GND.
4. This parameter is not directly testable, but is derived for use in Total Power Supply Calculations.
5. Values for these conditions are examples of the I_{CC} formula. These limits are guaranteed but not tested.
6. $I_C = I_{QUIESCENT} + I_{INPUTS} + I_{DYNAMIC}$
   $I_C = I_{CC} + \Delta I_{CC} D_H N_T + I_{CCD}$ (fiN)
   I_{CC} = Quiescent Current
   ΔI_{CC} = Power Supply Current for a TTL High Input (V_{IN} = 3.4V)
   D_H = Duty Cycle for TTL Inputs High
   N_T = Number of TTL Inputs at D_H
   I_{CCD} = Dynamic Current Caused by an Input Transition Pair (HLH or LHL)
   f_i = Input Frequency
   N = Number of Switches Toggling at fi
   All currents are in milliamps and all frequencies are in megahertz.

SWITCHING CHARACTERISTICS OVER OPERATING RANGE

Following Conditions Apply Unless Otherwise Specified:

Commercial: T_A = –40°C to +85°C, V_{CC} = 5.0V ±5%

Symbol	Description	Condition[1]	Min.[2]	Typ.	Max.	Unit
t_{PLH} t_{PHL}	Data Propagation Delay A to Y, Y to A[3,4]	C_L = 50pF R_L = 500Ω	—	—	0.25	ns
t_{PZH} t_{PZL}	Switch Turn on Delay $\overline{OE}$ to A, Y		1.5	—	6.5	ns
t_{PHZ} t_{PLZ}	Switch Turn off Delay $\overline{OE}$ to A, Y[3]		1.5	—	5.5	ns
$\lvert Q_{CI} \rvert$	Charge Injection[5,6]		—	1.5	—	pC

3471 tbl 07

NOTES:
1. See test circuit and waveforms.
2. Minimum limits guaranteed but not tested.
3. This parameter is guaranteed by design but not tested.
4. The bus switch contributes no propagation delay other than the RC delay of the on resistance of the switch and the load capacitance. The time constant for the switch alone is of the order of 2.5ns for 50pF load. Since this time is constant and much smaller than the rise/fall times of typical driving signals, it adds very little propagation delay to the system. Propagation delay on the bus switch when used in a system is determined by the driving circuit on the driving side of the switch and its interaction with the load on the driven side.
5. Measured at switch turn off, load = 50 pF in parallel with 10MΩ scope probe, V_{IN} = 0.0 volts.
6. Characterized parameter. Not 100% tested.

TEST CIRCUITS AND WAVEFORMS

TEST CIRCUITS FOR ALL OUTPUTS

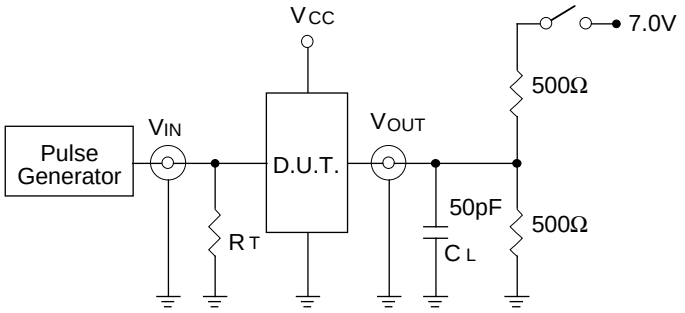

3471 drw 03

SWITCH POSITION

Test	Switch
Open Drain Disable Low Enable Low	Closed
All Other Tests	Open

3471 lnk 08

DEFINITIONS:

C_L= Load capacitance: includes jig and probe capacitance.

R_T = Termination resistance: should be equal to Z_{OUT} of the Pulse Generator.

SET-UP, HOLD AND RELEASE TIMES

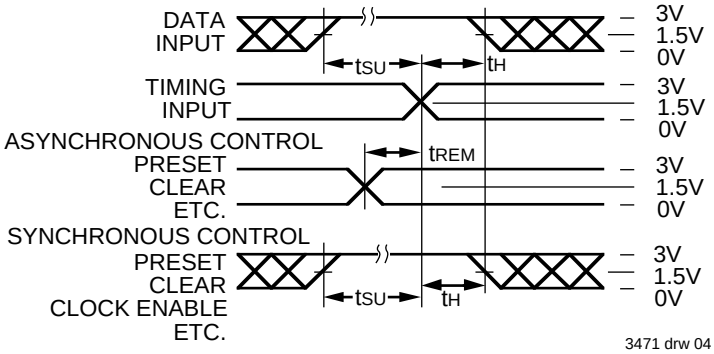

3471 drw 04

PULSE WIDTH

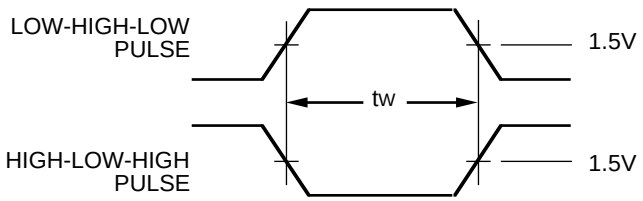

3471 drw 05

PROPAGATION DELAY

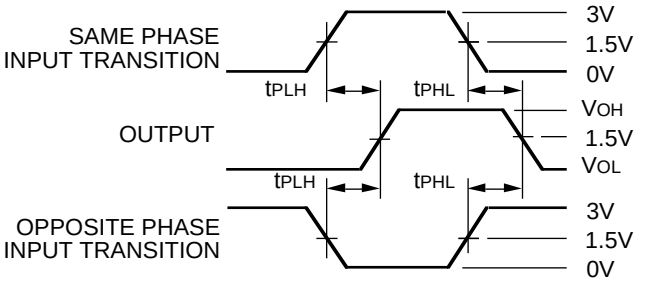

3471 drw 06

ENABLE AND DISABLE TIMES

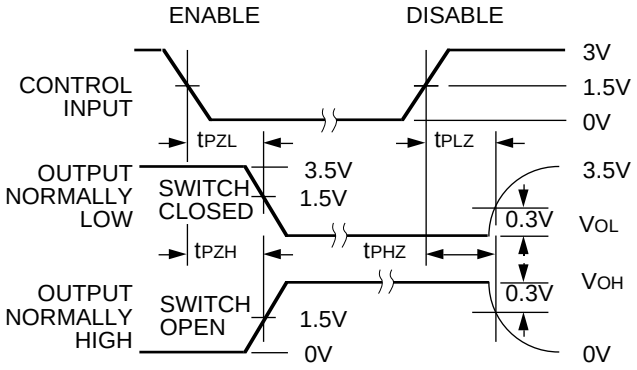

3471 drw 07

NOTES:

1. Diagram shown for input Control Enable-LOW and input Control Disable-HIGH
2. Pulse Generator for All Pulses: Rate ≤ 1.0MHz; t_F ≤ 2.5ns; t_R ≤ 2.5ns

ORDERING INFORMATION

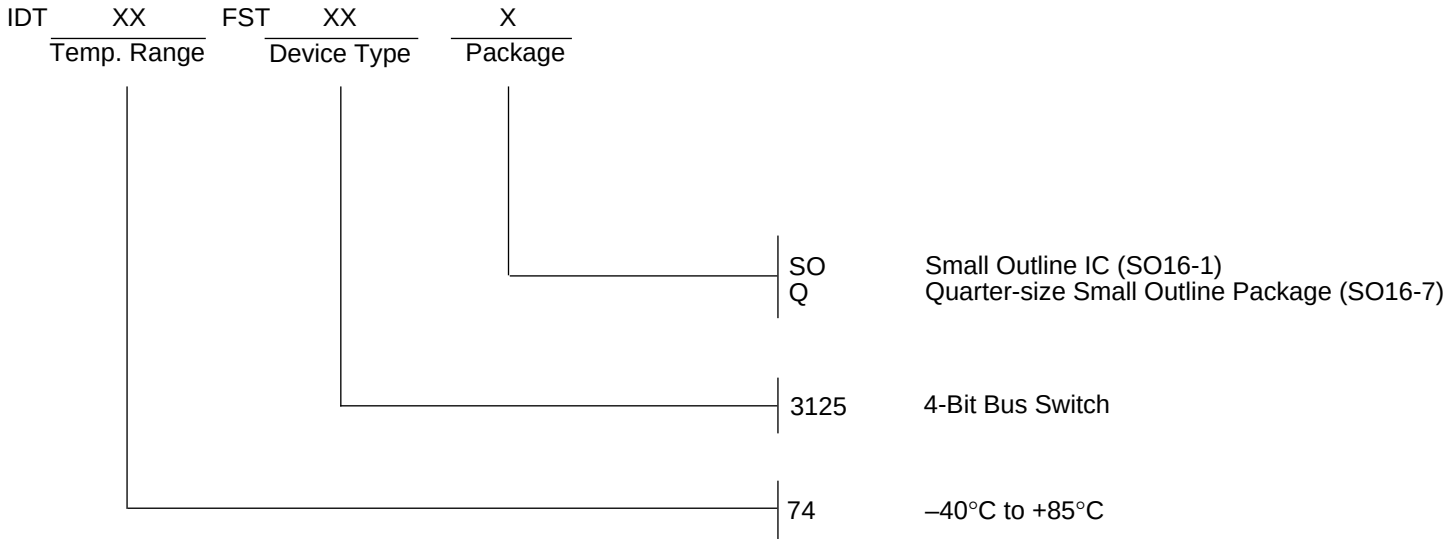

3471 drw 08

Компания «ЭлектроПласт» предлагает заключение долгосрочных отношений при поставках импортных электронных компонентов на взаимовыгодных условиях!

Наши преимущества:

- Оперативные поставки широкого спектра электронных компонентов отечественного и импортного производства напрямую от производителей и с крупнейших мировых складов;
- Поставка более 17-ти миллионов наименований электронных компонентов;
- Поставка сложных, дефицитных, либо снятых с производства позиций;
- Оперативные сроки поставки под заказ (от 5 рабочих дней);
- Экспресс доставка в любую точку России;
- Техническая поддержка проекта, помощь в подборе аналогов, поставка прототипов;
- Система менеджмента качества сертифицирована по Международному стандарту ISO 9001;
- Лицензия ФСБ на осуществление работ с использованием сведений, составляющих государственную тайну;
- Поставка специализированных компонентов (Xilinx, Altera, Analog Devices, Intersil, Interpoint, Microsemi, Aeroflex, Peregrine, Syfer, Eurofarad, Texas Instrument, Miteq, Cobham, E2V, MA-COM, Hittite, Mini-Circuits,General Dynamics и др.);

Помимо этого, одним из направлений компании «ЭлектроПласт» является направление «Источники питания». Мы предлагаем Вам помощь Конструкторского отдела:

- Подбор оптимального решения, техническое обоснование при выборе компонента;
- Подбор аналогов;
- Консультации по применению компонента;
- Поставка образцов и прототипов;
- Техническая поддержка проекта;
- Защита от снятия компонента с производства.

Как с нами связаться

Телефон: 8 (812) 309 58 32 (многоканальный)
Факс: 8 (812) 320-02-42
Электронная почта: org@eplast1.ru
Адрес: 198099, г. Санкт-Петербург, ул. Калинина, дом 2, корпус 4, литера А.