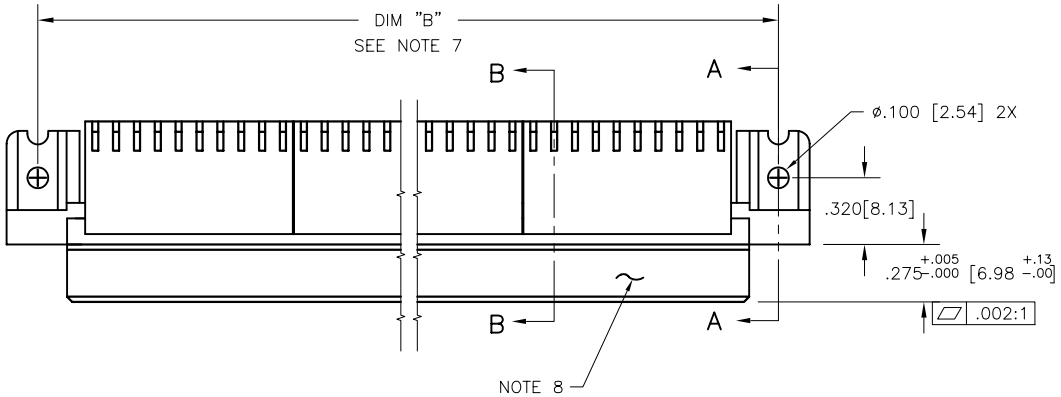
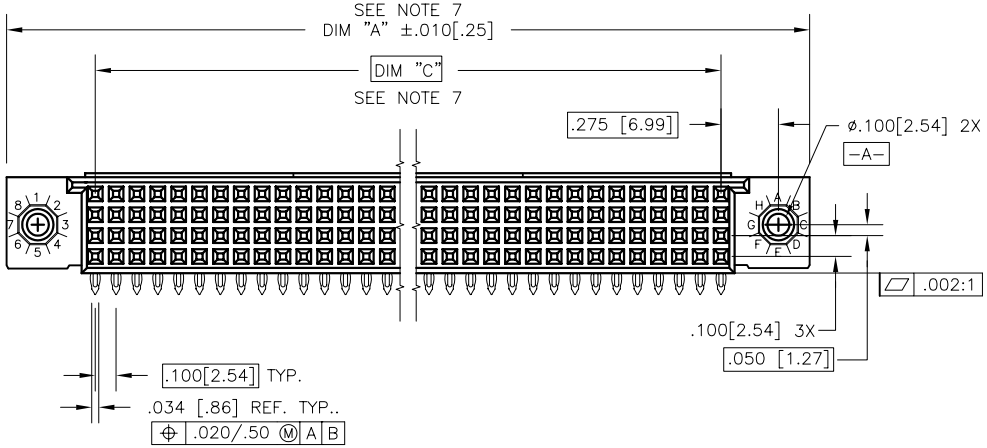
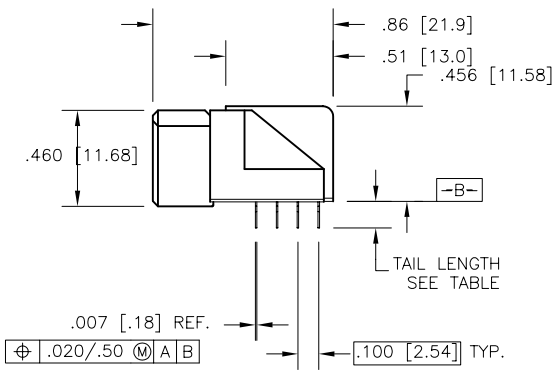
PRODUCT NUMBER
SEE TABLE

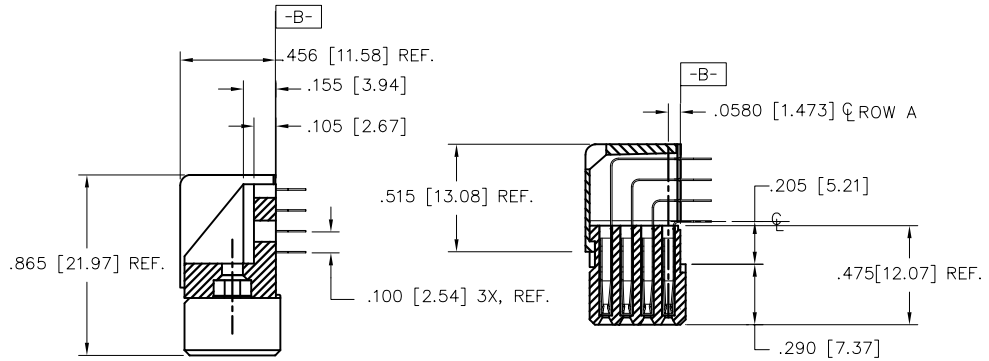






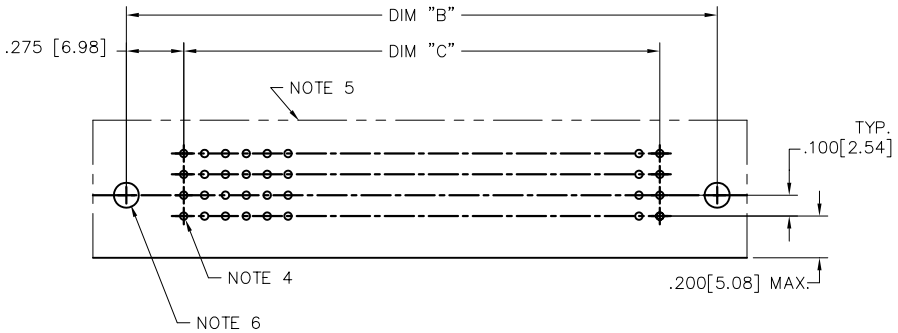
| | | |

PRODUCT NUMBER
SEE TABLE



SECTION A–A

SECTION B–B

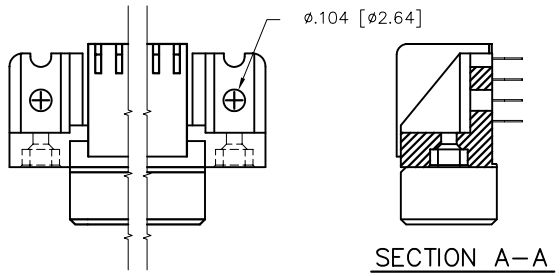


RECOMMENDED PCB LAYOUT

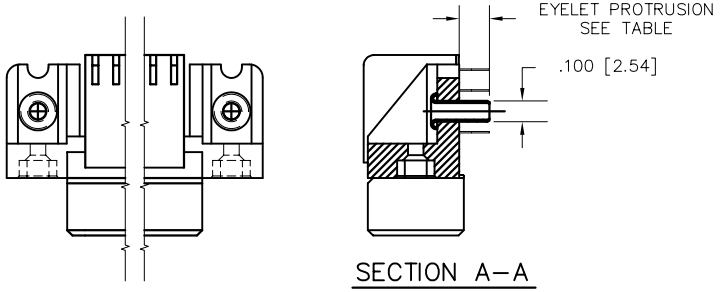
(ALL HOLES LOCATED ON .100[2.54]
GRID UNLESS OTHERWISE SHOWN)

| | | |

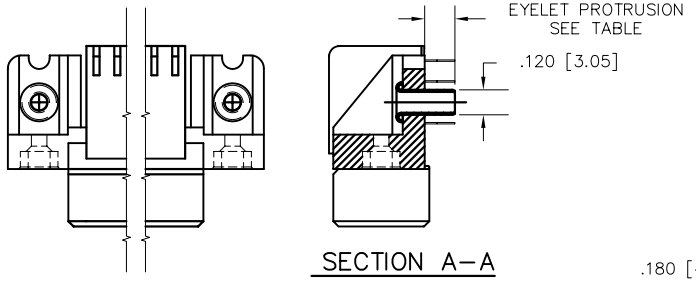
PRODUCT NUMBER
SEE TABLE



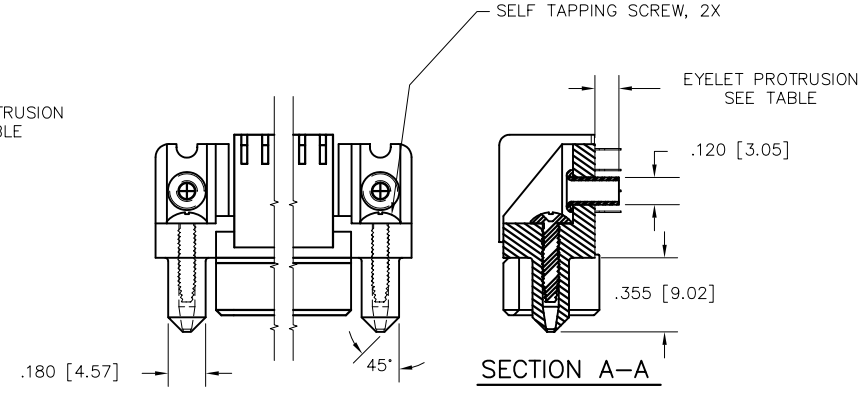
SPECIAL FEATURE OPTION A
SEE NOTE 6



SPECIAL FEATURE OPTION B
SEE NOTE 6



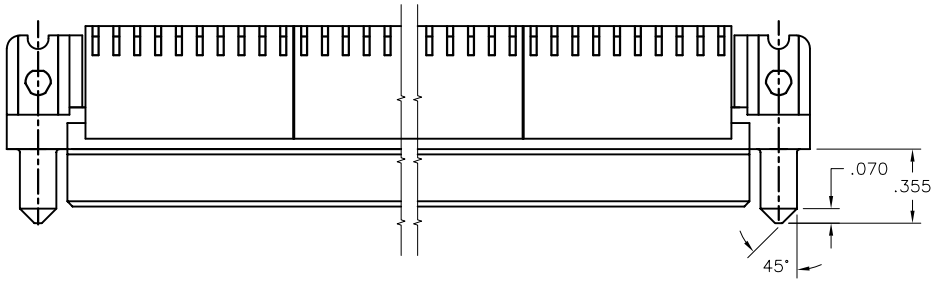
SPECIAL FEATURE OPTION C
SEE NOTE 6



SPECIAL FEATURE OPTION D
SEE NOTE 6

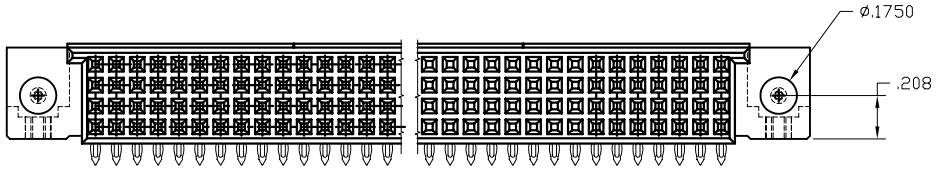
| | | |

PRODUCT NUMBER
SEE TABLE



SPECIAL FEATURE OPTION E

SEE NOTE 6



mat'l. code	surface	tolerance	projection	product family
NOTE 3	ISO 1302	ISO 406 ISO 1101		HPC

ltr	ecn no	dr	date
W			

tolerances unless otherwise specified

angles	linear		
0°±2°		.XX±.01/.X±0.3	
		.XXX±.005/.XX±0.13	
		.XXXX±.0020/.XXX±0.051	

INCH/MM

scale 1:1

dr	D.INGRAM	7/13/05
engr	D.HORCHLER	7/13/05
chr	T.BREWBAKER	7/13/05
appd	D.HORCHLER	7/13/05

title

4 ROW R/A RECEPTACLE
PRESS FIT

dwg no 50642 sheet 4 of 7 size A3

type Product Customer Drawing

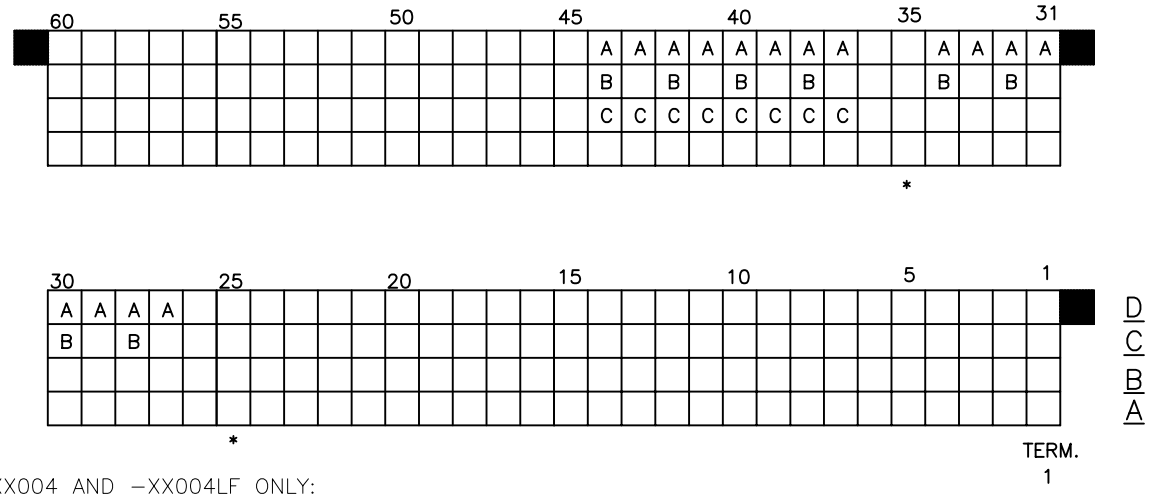
sheet index	revision sheet

FCIconnect.com
Copyright FCI
form: A3

PDM: Rev:W STATUS: Released Printed: May 14, 2011

PRODUCT NUMBER
50642–XX004
50642–XX004LF

SELECT LOAD (50642–XX004 AND 50642–XX004LF ONLY)



SPECIAL NOTES FOR –XX004 AND –XX004LF ONLY:

1. ALL POSITIONS ARE LOADED, EXCEPT OMITS AS SHOWN.
2. COLUMN 1, ROW A IS DESIGNATED AS SIGNAL TERM. 1, AS VIEWED FROM THE MATING FACE.

3. BECAUSE OF THE SELECT LOAD TERMINAL POSITIONS, ONLY 2 PRESS BLOCKS NEED TO BE INSTALLED–ONE PLACED STARTING IN COL. 25(*) AND ENDING IN COL. 34 THE OTHER PLACED STARTING IN COL. 35(*) AND ENDING IN COL.44.

4. SIGNAL DATA FOR 50642–XX004 AND –XX004LF:
   SIZE 4 x 60
   TOTAL NO. OF POSITIONS – 240
   NO. OF POSITIONS LOADED – 032

ITEM KEY	QTY.
A	16
B	8
C	8
BLANK	208

mat'l. code	surface	tolerance	projection	product family
NOTE 3	ISO 1302	ISO 406 ISO 1101		HPC

ltr	ecn no	dr	date
W			

tolerances unless otherwise specified
angles: 0°±2°
linear: .XX±.01/.X±0.3; .XXX±.005/.XX±0.13; .XXXX±.0020/.XXX±0.05

INCH/MM
scale 1:1

dr	D.INGRAM	7/13/05
engr	D.HORCHLER	7/13/05
chr	T.BREWBAKER	7/13/05
appd	D.HORCHLER	7/13/05

title: 4 ROW R/A RECEPTACLE PRESS FIT

dwg no 50642 | sheet 5 of 7 | size A3

type Product Customer Drawing

sheet index | revision sheet

FCIconnect.com
Copyright FCI
form: A3

PDM: Rev:W STATUS: Released Printed: May 14, 2011

PRODUCT NUMBER	NUMBER OF POSITIONS NOTE 2	TAIL LENGTH	SPECIAL FEATURES SEE NOTE 6	SOLDER TAIL PLATING	CONTACT PLATING	EYELET PROTRUSION	GUIDE PINS
50642–1YYYE	YYY	.125±.010/3.18±.25	–	TIN LEAD	30u"/.76u Au	N/A	NONE
50642–1YYYELF	YYY	.125±.010/3.18±.25	–	TIN	30u"/.76u GXT	N/A	NONE
50642–1YYYEA	YYY	.125±.010/3.18±.25	"A"	TIN LEAD	30u"/.76u Au	N/A	NONE
50642–1YYYEALF	YYY	.125±.010/3.18±.25	"A"	TIN	30u"/.76u GXT	N/A	NONE
50642–1YYYEB	YYY	.125±.010/3.18±.25	"B"	TIN LEAD	30u"/.76u Au	.145/3.68	NONE
50642–1YYYEBLF	YYY	.125±.010/3.18±.25	"B"	TIN	30u"/.76u GXT	.145/3.68	NONE
50642–1YYYEC	YYY	.125±.010/3.18±.25	"C"	TIN LEAD	30u"/.76u Au	.115/2.92	NONE
50642–1YYYECLF	YYY	.125±.010/3.18±.25	"C"	TIN	30u"/.76u GXT	.115/2.92	NONE
50642–1YYYED	YYY	.125±.010/3.18±.25	"D"	TIN LEAD	30u"/.76u Au	.115/2.92	2
50642–1YYYEDLF	YYY	.125±.010/3.18±.25	"D"	TIN	30u"/.76u GXT	.115/2.92	2
50642–1YYYEE	YYY	.125±.010/3.18±.25	"E"	TIN LEAD	30u"/.76u Au	N/A	2
50642–1YYYEELF	YYY	.125±.010/3.18±.25	"E"	TIN	30u"/.76u GXT	N/A	2
50642–1YYYF	YYY	.145±.010/3.68±.25	–	TIN LEAD	30u"/.76u Au	N/A	NONE
50642–1YYYFLF	YYY	.145±.010/3.68±.25	–	TIN	30u"/.76u GXT	N/A	NONE
50642–1YYYFA	YYY	.145±.010/3.68±.25	"A"	TIN LEAD	30u"/.76u Au	N/A	NONE
50642–1YYYFALF	YYY	.145±.010/3.68±.25	"A"	TIN	30u"/.76u GXT	N/A	NONE
50642–1YYYFC	YYY	.145±.010/3.68±.25	"C"	TIN LEAD	30u"/.76u Au	.145/3.68	NONE
50642–1YYYFCLF	YYY	.145±.010/3.68±.25	"C"	TIN	30u"/.76u GXT	.145/3.68	NONE
50642–1YYYFD	YYY	.145±.010/3.68±.25	"D"	TIN LEAD	30u"/.76u Au	.145/3.68	2
50642–1YYYFDLF	YYY	.145±.010/3.68±.25	"D"	TIN	30u"/.76u GXT	.145/3.68	2
50642–1YYYFE	YYY	.145±.010/3.68±.25	"E"	TIN LEAD	30u"/.76u Au	N/A	2
50642–1YYYFELF	YYY	.145±.010/3.68±.25	"E"	TIN	30u"/.76u GXT	N/A	2
50642–XX004	240	.125±.010/3.18±.25	SEE SHEET 5	TIN LEAD	30u"/.76u Au	N/A	NONE
50642–XX004LF	240	.125±.010/3.18±.25	SEE SHEET 5	TIN	30u"/.76u GXT	N/A	NONE

FCIconnect.com

Copyright FCI

mat'l. code: NOTE 3
surface: ISO 1302
tolerance: ISO 406, ISO 1101
projection
product family: HPC
ltr | ecn no | dr | date
W
tolerances unless otherwise specified
angles: 0°±2°
linear: .XX±.01/X±0.3; .XXX±.005/.XX±0.13; .XXXX±.0020/.XXX±0.05
INCH/MM
scale 1:1
dr D.INGRAM 7/13/05
engr D.HORCHLER 7/13/05
chr T.BREWBAKER 7/13/05
appd D.HORCHLER 7/13/05
title: 4 ROW R/A RECEPTACLE PRESS FIT
dwg no 50642
sheet 6 of 7
size A3
type Product Customer Drawing
sheet index
revision sheet

form: A3

PDM: Rev:W STATUS: Released Printed: May 14, 2011

PRODUCT NUMBER
SEE TABLE

NOTES:

1. PRODUCT NUMBERING CODE

50642– X YYY Z S LF

- LF — LEAD FREE (OPTIONAL)
- S — SPECIAL FEATURES SEE TABLE
- Z — TAIL LENGTH SEE TABLE
- YYY — NO. OF POSITIONS SEE NOTE 2
- X — PLATING SEE TABLE
- 50642 — BASE NUMBER

PRODUCT NUMBERING CODE FOR SELECT LOAD

50642– XX YYY LF

- LF — LEAD FREE (OPTIONAL)
- YYY — SEQUENCE NUMBER
- XX — ALWAYS "XX"
- 50642 — BASE NUMBER

2. THIS PRODUCT IS CONFIGURED IN SIZES OF 6 THRU 80 COLUMNS IN INCREMENTS OF ONE, i.e. 6, 7, 8, 9, ...79, 80.

3. MATERIAL: PRESS BLOCK – HIGH TEMP THERMOPLASTIC;
HOUSING–GLASS AND MINERAL FILLED HIGH TEMPERTURE THERMOPLASTIC, FLAME RETARDANT PER UL94V–0. COLOR–BLACK
CONTACT–BeCU

4. DRILLED HOLE DIA OF .0453±.001 INCH FINISHED TO .0400±.0030 INCH BY PLATING SnPb OR OTHER PLATING 0.0003 TO 0.0006 INCHES THICK WITH A COPPER UNDERPLATE AS NEEDED.

5. INFORMATION DOCUMENT: FOR PCB STAY– AWAY ZONE, SEE TA–0954.

6. SPECIAL FEATURES (SEE PRODUCT NUMBER TABLE, AND DETIALS ON SHEET 3)
   - – IF NO SPECIAL FEATURE CODE IS SELECTED, PCB MOUNTING HOLE DIMENSION TO BE ø.120±.003[3.05±0.07]
   - "A" PCB MOUNTING HOLE DIMENSION TO BE ø.100±.003[2.54±0.07]
   - "B" INCLUDES PRE–INSTALLED EYELETS FOR PCB ATTACHMENT IN A ø.100±.003[2.54±0.07] MOUNTING HOLE. (E TAIL ONLY)
   - "C" INCLUDES PRE–INSTALLED EYELETS FOR PCB ATTACHMENT IN A ø.120±.003[3.05±0.07] MOUNTING HOLE.
   - "D" INCLUDES PRE–INSTALLED EYELETS WITH MOLDED GUIDE PINS FOR PCB ATTACHMENT IN A ø.120±.003[3.05±0.07] MOUNTING HOLE.
   - "E" INCLUDES MOLDED GUIDE PINS WITH TRI–HOLE SHAPED MOUNTING HOLES. (EYELETS NOT INSTALLED)

7. LENGTH CALCULATIONS:
   DIMENSION "A" CALCULATION = .100 [2.54] X NO. OF COLUMNS + .75 [19.1]
   DIMENSION "B" CALCULATION = .100 [2.54] X NO. OF COLUMNS + .450[11.43]
   DIMENSION "C" CALCULATION = .100 [2.54] X NO. OF COLUMNS – .100[2.54]

8. MANUFACTURE'S LOGO, PN, AND LOT CODE TO APPEAR ON THIS SURFACE.

9. THIS PRODUCT (WITH "LF" SUFFIX) MEETS EUROPEAN UNION DIRECTIVES AND OTHER COUNTRY REGULATIONS AS DESCRIBED IN GS–22–008.

10. THIS HOUSING WILL WITHSTAND EXPOSURE TO 260°C PEAK TEMPERTURE FOR 10–30 SECONDS IN A CONVECTION, INFRA–RED OR VAPOR PHASE REFLOW OVEN.

11. ALL POSITIONS ARE LOADED EXCEPT FOR –XXYYY ASSEMBLIES WHICH HAVE SELECTIVE LOADING.

mat'l. code				surface	tolerance	projection	product family
NOTE 3				ISO 1302	ISO 406 ISO 1101		HPC
ltr	ecn no	dr	date	tolerances unless otherwise specified			title
W				angles	linear .XX±.01/X±0.3	INCH/MM	4 ROW R/A RECEPTACLE PRESS FIT
				0°±2°	.XXX±.005/.XX±0.13		
					.XXXX±.0020/.XXX±0.05	scale 1:1	
				dr	D.INGRAM	7/13/05	dwg no 50642 sheet 7 of 7 size A3
				engr	D.HORCHLER	7/13/05	
				chr	T.BREWBAKER	7/13/05	
				appd	D.HORCHLER	7/13/05	type Product Customer Drawing
sheet index	revision sheet						

FCIconnect.com
Copyright FCI
form: A3

PDM: Rev:W STATUS: Released Printed: May 14, 2011

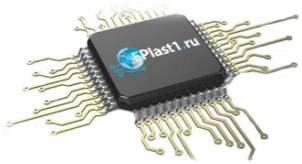
Компания «ЭлектроПласт» предлагает заключение долгосрочных отношений при поставках импортных электронных компонентов на взаимовыгодных условиях!

Наши преимущества:

- Оперативные поставки широкого спектра электронных компонентов отечественного и импортного производства напрямую от производителей и с крупнейших мировых складов;
- Поставка более 17-ти миллионов наименований электронных компонентов;
- Поставка сложных, дефицитных, либо снятых с производства позиций;
- Оперативные сроки поставки под заказ (от 5 рабочих дней);
- Экспресс доставка в любую точку России;
- Техническая поддержка проекта, помощь в подборе аналогов, поставка прототипов;
- Система менеджмента качества сертифицирована по Международному стандарту ISO 9001;
- Лицензия ФСБ на осуществление работ с использованием сведений, составляющих государственную тайну;
- Поставка специализированных компонентов (Xilinx, Altera, Analog Devices, Intersil, Interpoint, Microsemi, Aeroflex, Peregrine, Syfer, Eurofarad, Texas Instrument, Miteq, Cobham, E2V, MA-COM, Hittite, Mini-Circuits,General Dynamics и др.);

Помимо этого, одним из направлений компании «ЭлектроПласт» является направление «Источники питания». Мы предлагаем Вам помощь Конструкторского отдела:

- Подбор оптимального решения, техническое обоснование при выборе компонента;
- Подбор аналогов;
- Консультации по применению компонента;
- Поставка образцов и прототипов;
- Техническая поддержка проекта;
- Защита от снятия компонента с производства.



Как с нами связаться

Телефон: 8 (812) 309 58 32 (многоканальный)
Факс: 8 (812) 320-02-42
Электронная почта: org@eplast1.ru
Адрес: 198099, г. Санкт-Петербург, ул. Калинина, дом 2, корпус 4, литера А.