PRODUCT NUMBER
SEE TABLE

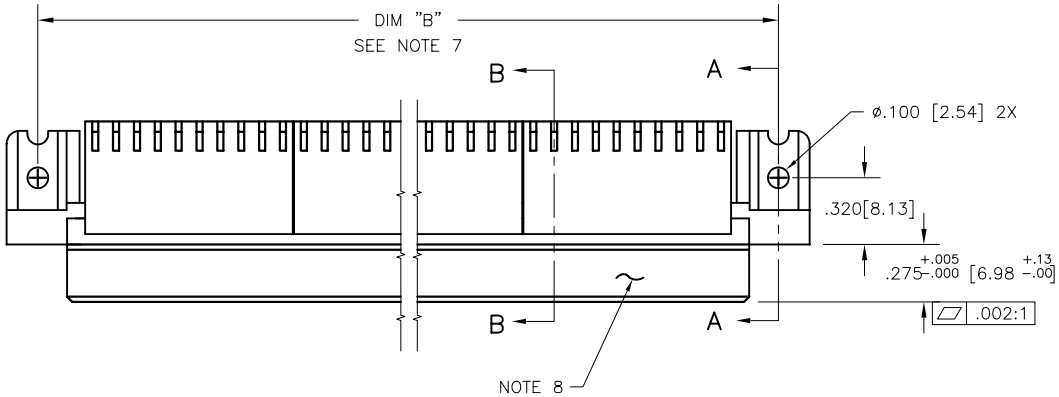

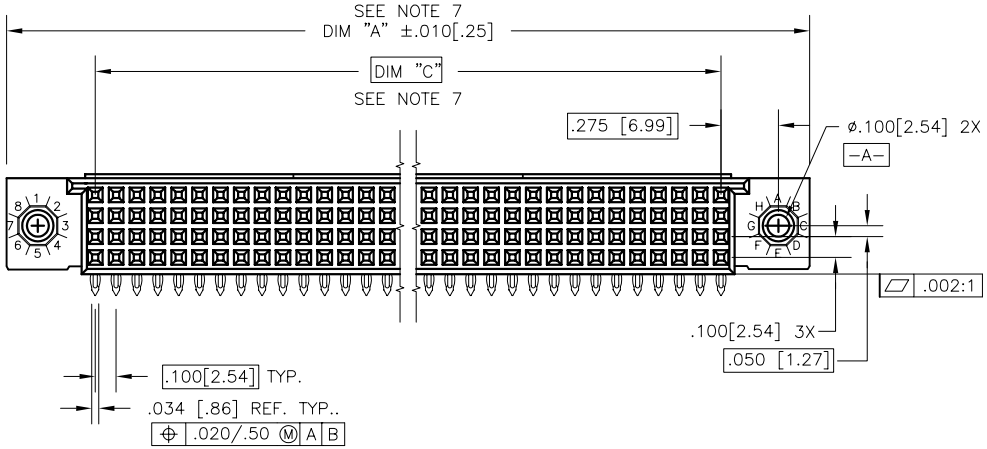

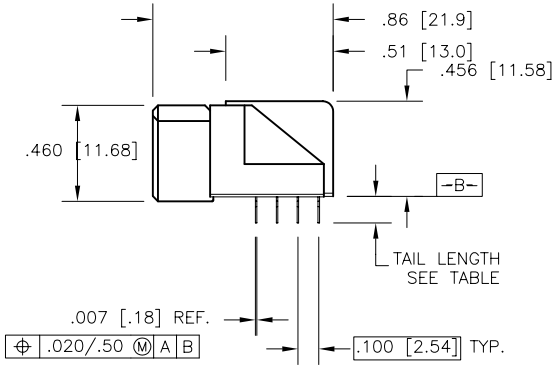

mat'l. code NOTE 3						surface ISO 1302		tolerance ISO 406 ISO 1101				projection				product family HPC																			
ltr	ecn no	dr	date			tolerances unless otherwise specified										title 4 ROW R/A RECEPTACLE PRESS FIT																			
P	V10824	JRW	2/6/01			angles		linear		.XX±.01/.X±0.3		INCH/MM																							
R	V05-0460	DAI	7/13/05							.XXX±.005/.XX±0.13																									
S	V05-1003	DAI	11/1/05			0°±2°				.XXXX±.0020/.XXX±0.051		scale 1:1																							
T	V05-1041	HTB	11/14/05	dr		D.INGRAM				7/13/05						dwg no 50642				sheet 1 of 7												size A3			
U	M06-0255	MHT	7/06/06	engr		D.HORCHLER				7/13/05																									
V	M06-0388	MHT	10/04/06	chr		T.BREWBAKER				7/13/05																									
W	M08-0149	MHT	5/27/08	appd		D.HORCHLER				7/13/05						type Product Customer Drawing																			
sheet index	revision	W	W	W	W	W	W	W																											
	sheet	1	2	3	4	5	6	7																											

form: A3

FCIconnect.com
Copyright FCI

PRODUCT NUMBER
SEE TABLE

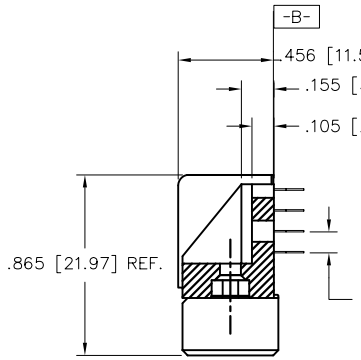

SECTION A–A

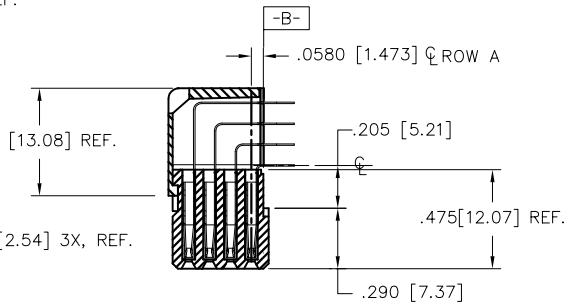

SECTION B–B

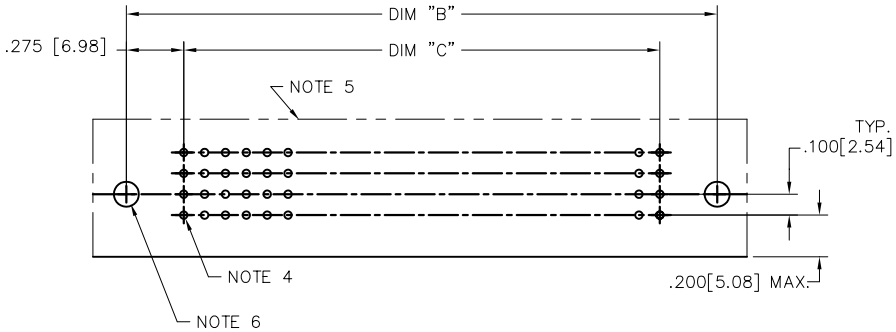

RECOMMENDED PCB LAYOUT
(ALL HOLES LOCATED ON .100[2.54]
GRID UNLESS OTHERWISE SHOWN)

mat'l. code NOTE 3				surface ISO 1302	tolerance ISO 406 ISO 1101	projection	product family HPC
ltr	ecn no	dr	date	tolerances unless otherwise specified			title
W				angles	linear .XX±.01/.X±0.3 .XXX±.005/.XX±0.13 .XXXX±.0020/.XXX±0.051	INCH/MM	4 ROW R/A RECEPTACLE PRESS FIT
				0°±2°		scale 1:1	
				dr	D.INGRAM	7/13/05	dwg no 50642 sheet 2 of 7 size A3
				engr	D.HORCHLER	7/13/05	
				chr	T.BREWBAKER	7/13/05	
				appd	D.HORCHLER	7/13/05	type Product Customer Drawing
sheet index	revision sheet						

form: A3

FCIconnect.com
Copyright FCI

PDM: Rev:W STATUS: Released Printed: May 14, 2011

PRODUCT NUMBER
SEE TABLE

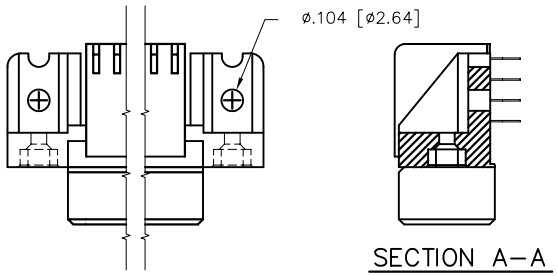

SPECIAL FEATURE OPTION A
SEE NOTE 6

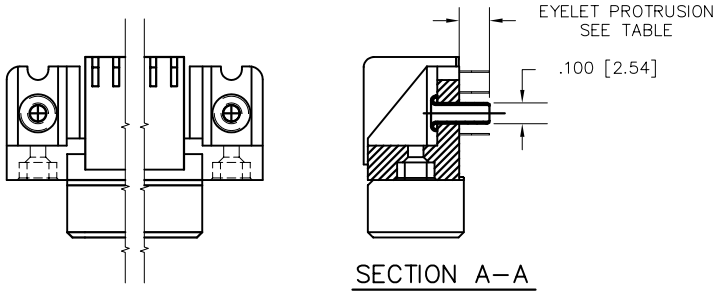

SPECIAL FEATURE OPTION B
SEE NOTE 6

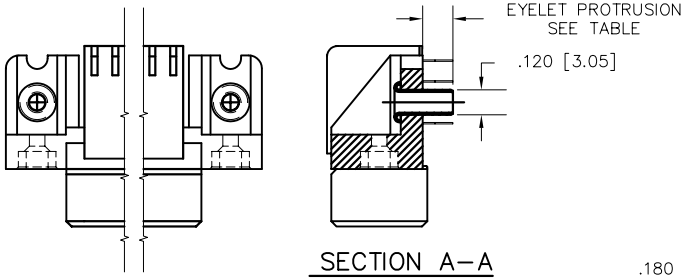

SPECIAL FEATURE OPTION C
SEE NOTE 6

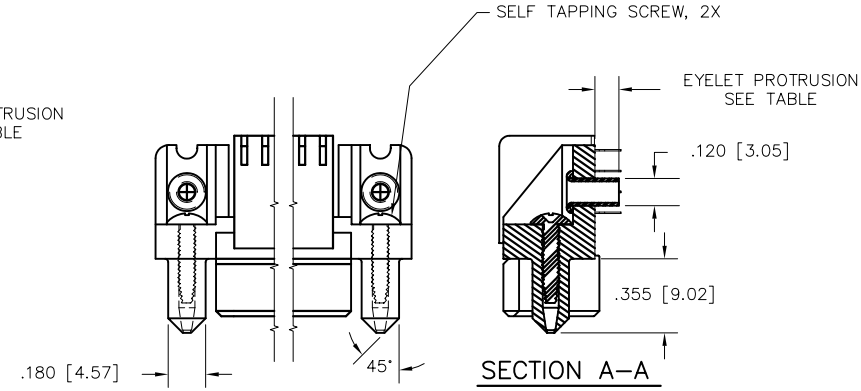

SPECIAL FEATURE OPTION D
SEE NOTE 6

mat'l. code NOTE 3				surface ISO 1302	tolerance ISO 406 ISO 1101	projection	product family HPC
ltr	ecn no	dr	date	tolerances unless otherwise specified			title 4 ROW R/A RECEPTACLE PRESS FIT
W				angles 0°±2°	linear .XX±.01/.X±0.3 .XXX±.005/.XX±0.13 .XXXX±.0020/.XXX±0.051	INCH/MM	
						scale 1:1	
				dr	D.INGRAM	7/13/05	dwg no 50642 sheet 3 of 7 size A3
				engr	D.HORCHLER	7/13/05	
				chr	T.BREWBAKER	7/13/05	
				appd	D.HORCHLER	7/13/05	type Product Customer Drawing
sheet index	revision sheet						

form: A3

FCIconnect.com
Copyright FCI

PDM: Rev:W STATUS: Released Printed: May 14, 2011

PRODUCT NUMBER
SEE TABLE

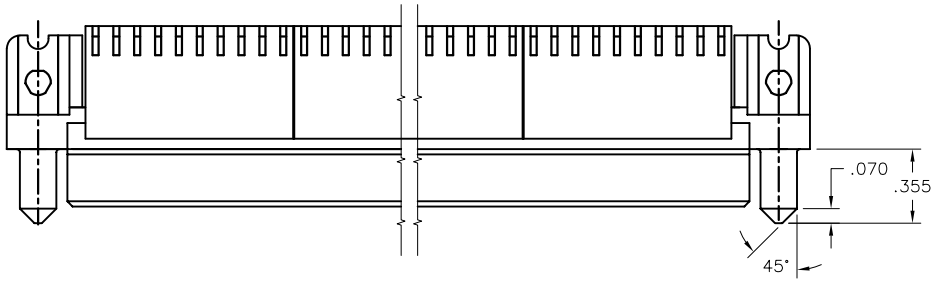

SPECIAL FEATURE OPTION E

SEE NOTE 6

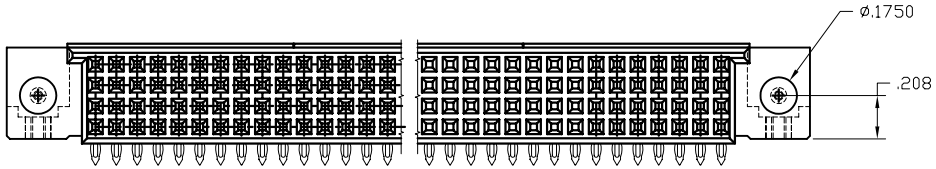

mat'l. code NOTE 3				surface ISO 1302		tolerance ISO 406 ISO 1101		projection	product family HPC
ltr	ecn no	dr	date	tolerances unless otherwise specified					title 4 ROW R/A RECEPTACLE PRESS FIT
W				angles	linear	.XX±.01/.X±0.3		INCH/MM	
						.XXX±.005/.XX±0.13			
				0°±2°		.XXXX±.0020/.XXX±0.051		scale 1:1	
				dr	D.INGRAM	7/13/05			dwg no 50642 sheet 4 of 7 size A3
				engr	D.HORCHLER	7/13/05			
				chr	T.BREWBAKER	7/13/05			
				appd	D.HORCHLER	7/13/05			type Product Customer Drawing
sheet index	revision sheet								

form: A3

FCIconnect.com
Copyright FCI

PRODUCT NUMBER
50642-XX004
50642-XX004LF

SELECT LOAD (50642-XX004 AND 50642-XX004LF ONLY)

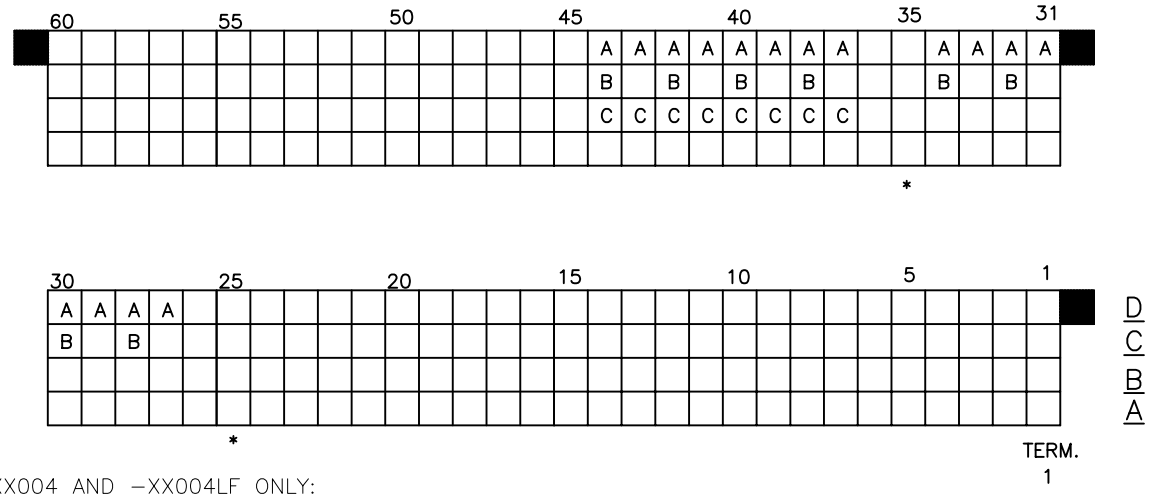

SPECIAL NOTES FOR -XX004 AND -XX004LF ONLY:

1. ALL POSITIONS ARE LOADED, EXCEPT OMITS AS SHOWN.
2. COLUMN 1, ROW A IS DESIGNATED AS SIGNAL TERM. 1, AS VIEWED FROM THE MATING FACE.

3. BECAUSE OF THE SELECT LOAD TERMINAL POSITIONS, ONLY 2 PRESS BLOCKS NEED TO BE INSTALLED-ONE PLACED STARTING IN COL. 25(*) AND ENDING IN COL. 34 THE OTHER PLACED STARTING IN COL. 35(*) AND ENDING IN COL.44.

4. SIGNAL DATA FOR 50642-XX004 AND -XX004LF:
   SIZE 4 x 60
   TOTAL NO. OF POSITIONS - 240
   NO. OF POSITIONS LOADED - 032

ITEM KEY	QTY.
A	16
B	8
C	8
BLANK	208

mat'l. code NOTE 3				surface ISO 1302	tolerance ISO 406 ISO 1101	projection	product family HPC
ltr	ecn no	dr	date	tolerances unless otherwise specified			title 4 ROW R/A RECEPTACLE PRESS FIT
W				angles 0°±2°	linear .XX±.01/.X±0.3 .XXX±.005/.XX±0.13 .XXXX±.0020/.XXX±0.051	INCH/MM scale 1:1	
				dr	D.INGRAM	7/13/05	dwg no 50642 sheet 5 of 7 size A3
				engr	D.HORCHLER	7/13/05	
				chr	T.BREWBAKER	7/13/05	
				appd	D.HORCHLER	7/13/05	type Product Customer Drawing
sheet index	revision sheet						

form: A3

FCIconnect.com
Copyright FCI

PDM: Rev:W STATUS: Released Printed: May 14, 2011

PRODUCT NUMBER	NUMBER OF POSITIONS NOTE 2	TAIL LENGTH	SPECIAL FEATURES SEE NOTE 6	SOLDER TAIL PLATING	CONTACT PLATING	EYELET PROTRUSION	GUIDE PINS
50642–1YYYE	YYY	.125±.010/3.18±.25	–	TIN LEAD	30u"/.76u Au	N/A	NONE
50642–1YYYELF	YYY	.125±.010/3.18±.25	–	TIN	30u"/.76u GXT	N/A	NONE
50642–1YYYEA	YYY	.125±.010/3.18±.25	"A"	TIN LEAD	30u"/.76u Au	N/A	NONE
50642–1YYYEALF	YYY	.125±.010/3.18±.25	"A"	TIN	30u"/.76u GXT	N/A	NONE
50642–1YYYEB	YYY	.125±.010/3.18±.25	"B"	TIN LEAD	30u"/.76u Au	.145/3.68	NONE
50642–1YYYEBLF	YYY	.125±.010/3.18±.25	"B"	TIN	30u"/.76u GXT	.145/3.68	NONE
50642–1YYYEC	YYY	.125±.010/3.18±.25	"C"	TIN LEAD	30u"/.76u Au	.115/2.92	NONE
50642–1YYYECLF	YYY	.125±.010/3.18±.25	"C"	TIN	30u"/.76u GXT	.115/2.92	NONE
50642–1YYYED	YYY	.125±.010/3.18±.25	"D"	TIN LEAD	30u"/.76u Au	.115/2.92	2
50642–1YYYEDLF	YYY	.125±.010/3.18±.25	"D"	TIN	30u"/.76u GXT	.115/2.92	2
50642–1YYYEE	YYY	.125±.010/3.18±.25	"E"	TIN LEAD	30u"/.76u Au	N/A	2
50642–1YYYEELF	YYY	.125±.010/3.18±.25	"E"	TIN	30u"/.76u GXT	N/A	2
50642–1YYYF	YYY	.145±.010/3.68±.25	–	TIN LEAD	30u"/.76u Au	N/A	NONE
50642–1YYYFLF	YYY	.145±.010/3.68±.25	–	TIN	30u"/.76u GXT	N/A	NONE
50642–1YYYFA	YYY	.145±.010/3.68±.25	"A"	TIN LEAD	30u"/.76u Au	N/A	NONE
50642–1YYYFALF	YYY	.145±.010/3.68±.25	"A"	TIN	30u"/.76u GXT	N/A	NONE
50642–1YYYFC	YYY	.145±.010/3.68±.25	"C"	TIN LEAD	30u"/.76u Au	.145/3.68	NONE
50642–1YYYFCLF	YYY	.145±.010/3.68±.25	"C"	TIN	30u"/.76u GXT	.145/3.68	NONE
50642–1YYYFD	YYY	.145±.010/3.68±.25	"D"	TIN LEAD	30u"/.76u Au	.145/3.68	2
50642–1YYYFDLF	YYY	.145±.010/3.68±.25	"D"	TIN	30u"/.76u GXT	.145/3.68	2
50642–1YYYFE	YYY	.145±.010/3.68±.25	"E"	TIN LEAD	30u"/.76u Au	N/A	2
50642–1YYYFELF	YYY	.145±.010/3.68±.25	"E"	TIN	30u"/.76u GXT	N/A	2
50642–XX004	240	.125±.010/3.18±.25	SEE SHEET 5	TIN LEAD	30u"/.76u Au	N/A	NONE
50642–XX004LF	240	.125±.010/3.18±.25	SEE SHEET 5	TIN	30u"/.76u GXT	N/A	NONE

mat'l. code NOTE 3	surface ISO 1302	tolerance ISO 406 ISO 1101	projection
ltr W / ecn no / dr / date	tolerances unless otherwise specified		INCH/MM
	angles 0°±2°	linear .XX±.01/.X±0.3 .XXX±.005/.XX±0.13 .XXXX±.0020/.XXX±0.051	scale 1:1
	dr D.INGRAM 7/13/05		
	engr D.HORCHLER 7/13/05		
	chr T.BREWBAKER 7/13/05		
	appd D.HORCHLER 7/13/05		
sheet index / revision sheet			

product family: HPC

title: 4 ROW R/A RECEPTACLE PRESS FIT

dwg no: 50642 sheet 6 of 7 size A3

type: Product Customer Drawing

FCIconnect.com
Copyright FCI
form: A3

PDM: Rev:W STATUS: Released Printed: May 14, 2011

PRODUCT NUMBER
SEE TABLE

NOTES:

1. PRODUCT NUMBERING CODE

50642– X YYY Z S LF

- LF — LEAD FREE (OPTIONAL)
- S — SPECIAL FEATURES SEE TABLE
- Z — TAIL LENGTH SEE TABLE
- YYY — NO. OF POSITIONS SEE NOTE 2
- X — PLATING SEE TABLE
- 50642 — BASE NUMBER

PRODUCT NUMBERING CODE FOR SELECT LOAD

50642– XX YYY LF

- LF — LEAD FREE (OPTIONAL)
- YYY — SEQUENCE NUMBER
- XX — ALWAYS "XX"
- 50642 — BASE NUMBER

2. THIS PRODUCT IS CONFIGURED IN SIZES OF 6 THRU 80 COLUMNS IN INCREMENTS OF ONE, i.e. 6, 7, 8, 9, ...79, 80.

3. MATERIAL: PRESS BLOCK – HIGH TEMP THERMOPLASTIC;
HOUSING–GLASS AND MINERAL FILLED HIGH TEMPERTURE THERMOPLASTIC, FLAME RETARDANT PER UL94V–O. COLOR–BLACK
CONTACT–BeCU

4. DRILLED HOLE DIA OF .0453±.001 INCH FINISHED TO .0400±.0030 INCH BY PLATING SnPb OR OTHER PLATING 0.0003 TO 0.0006 INCHES THICK WITH A COPPER UNDERPLATE AS NEEDED.

5. INFORMATION DOCUMENT: FOR PCB STAY– AWAY ZONE, SEE TA–0954.

6. SPECIAL FEATURES (SEE PRODUCT NUMBER TABLE, AND DETIALS ON SHEET 3)
   - – IF NO SPECIAL FEATURE CODE IS SELECTED, PCB MOUNTING HOLE DIMENSION TO BE ø.120±.003[3.05±0.07]
   - "A" PCB MOUNTING HOLE DIMENSION TO BE ø.100±.003[2.54±0.07]
   - "B" INCLUDES PRE–INSTALLED EYELETS FOR PCB ATTACHMENT IN A ø.100±.003[2.54±0.07] MOUNTING HOLE. (E TAIL ONLY)
   - "C" INCLUDES PRE–INSTALLED EYELETS FOR PCB ATTACHMENT IN A ø.120±.003[3.05±0.07] MOUNTING HOLE.
   - "D" INCLUDES PRE–INSTALLED EYELETS WITH MOLDED GUIDE PINS FOR PCB ATTACHMENT IN A ø.120±.003[3.05±0.07] MOUNTING HOLE.
   - "E" INCLUDES MOLDED GUIDE PINS WITH TRI–HOLE SHAPED MOUNTING HOLES. (EYELETS NOT INSTALLED)

7. LENGTH CALCULATIONS:
   DIMENSION "A" CALCULATION = .100 [2.54] X NO. OF COLUMNS + .75 [19.1]
   DIMENSION "B" CALCULATION = .100 [2.54] X NO. OF COLUMNS + .450[11.43]
   DIMENSION "C" CALCULATION = .100 [2.54] X NO. OF COLUMNS – .100[2.54]

8. MANUFACTURE'S LOGO, PN, AND LOT CODE TO APPEAR ON THIS SURFACE.

9. THIS PRODUCT (WITH "LF" SUFFIX) MEETS EUROPEAN UNION DIRECTIVES AND OTHER COUNTRY REGULATIONS AS DESCRIBED IN GS–22–008.

10. THIS HOUSING WILL WITHSTAND EXPOSURE TO 260°C PEAK TEMPERTURE FOR 10–30 SECONDS IN A CONVECTION, INFRA–RED OR VAPOR PHASE REFLOW OVEN.

11. ALL POSITIONS ARE LOADED EXCEPT FOR –XXYYY ASSEMBLIES WHICH HAVE SELECTIVE LOADING.

mat'l. code: NOTE 3				surface: ISO 1302	tolerance: ISO 406, ISO 1101	projection	product family: HPC
ltr	ecn no	dr	date	tolerances unless otherwise specified			title: 4 ROW R/A RECEPTACLE PRESS FIT
W				angles: 0°±2°	linear: .XX±.01/.X±0.3; .XXX±.005/.XX±0.13; .XXXX±.0020/.XXX±0.051	INCH/MM	
						scale 1:1	
				dr	D.INGRAM	7/13/05	dwg no: 50642 — sheet 7 of 7 — size A3
				engr	D.HORCHLER	7/13/05	
				chr	T.BREWBAKER	7/13/05	
				appd	D.HORCHLER	7/13/05	type: Product Customer Drawing
sheet index	revision sheet						

Copyright FCI
FCIconnect.com
form: A3

Компания «ЭлектроПласт» предлагает заключение долгосрочных отношений при поставках импортных электронных компонентов на взаимовыгодных условиях!

Наши преимущества:

- Оперативные поставки широкого спектра электронных компонентов отечественного и импортного производства напрямую от производителей и с крупнейших мировых складов;
- Поставка более 17-ти миллионов наименований электронных компонентов;
- Поставка сложных, дефицитных, либо снятых с производства позиций;
- Оперативные сроки поставки под заказ (от 5 рабочих дней);
- Экспресс доставка в любую точку России;
- Техническая поддержка проекта, помощь в подборе аналогов, поставка прототипов;
- Система менеджмента качества сертифицирована по Международному стандарту ISO 9001;
- Лицензия ФСБ на осуществление работ с использованием сведений, составляющих государственную тайну;
- Поставка специализированных компонентов (Xilinx, Altera, Analog Devices, Intersil, Interpoint, Microsemi, Aeroflex, Peregrine, Syfer, Eurofarad, Texas Instrument, Miteq, Cobham, E2V, MA-COM, Hittite, Mini-Circuits,General Dynamics и др.);

Помимо этого, одним из направлений компании «ЭлектроПласт» является направление «Источники питания». Мы предлагаем Вам помощь Конструкторского отдела:

- Подбор оптимального решения, техническое обоснование при выборе компонента;
- Подбор аналогов;
- Консультации по применению компонента;
- Поставка образцов и прототипов;
- Техническая поддержка проекта;
- Защита от снятия компонента с производства.

Как с нами связаться

Телефон: 8 (812) 309 58 32 (многоканальный)
Факс: 8 (812) 320-02-42
Электронная почта: org@eplast1.ru
Адрес: 198099, г. Санкт-Петербург, ул. Калинина, дом 2, корпус 4, литера А.