Metal Oxide Varistors

MVR Series Description

MERITEK

RoHS

FEATURES

- Fast response to rapidly rising surge voltage
- High performance clamping voltage characteristics
- Operating / storage temperature: -40 ~ +85°C / -40 ~ +125°C
- Varistor voltage: 18V to 1800 V

APPLICATIONS

- Transistor, diode, IC, thyristor and triac semiconductor protection
- Surge protection in consumer electronics, industrial electronics, communication, home appliances
- Electrostatic discharge and noise spike suppression
- Relay and electromagnetic valve surge absorption

UL1414 E197475
CSA 225125
VDE 40013638
UL1449 3rd Edition E326004

PART NUMBERING SYSTEM

MVR 05 D 471 K Y -S

Meritek Series

Element Dia

CODE	05	07	10	14	18	20	25	32	40	53	34
mm	Ø5.0	Ø7.0	Ø10.0	Ø14.0	Ø18.0	Ø20.0	Ø25.0	Ø32.0	Ø40.0	Ø53.0	Ø34.0

CODE	D	S	A	X
	Disk or dual square	Single square	Bare	Special

Varistor Voltage

The first two digits are significant figures and the third one denotes the number of zeros following.
Decimal point is represented by R:

CODE	330	471	102
	$33 \times 10^0 = 33V$	$47 \times 10^1 = 470V$	$10 \times 10^2 = 1000V$

Tolerance

CODE	K	M	
	±10%	±20%	Customer special requirement

Lead Type

CODE	Blank	Q	G	Y	O	I
	Straight Wire: Less than 25mm Strap: More than 25mm	Strap	Wire	Y kink	Out kink	In kink

… - S High Surge

* Notes: A suffix may be added to denote custom features.

Metal Oxide Varistors

MVR Series

MERITEK

- **05D SPECIFICATION**

Part No.	Maximum Allowable Voltage		Varistor Voltage	Clamping Voltage (Max.)		Maximum Peak Current (8/20 μ s)(A)		Maximum Energy (10/1000 s J)		Rated Power	Typical Capacitance
	Acrms (V)	DC (V)	V@1ma (V)	VC (V)	Ip (A)	standard	high surge	standard	high surge	(w)	@1KHz (pF)
05D 180K	11	14	18(15~21)	40	1	100	250	0.4	0.6	0.01	1400
05D 220K	14	18	22(20~24)	48				0.5	0.7		1150
05D 270K	17	22	27(24~30)	60				0.6	0.9		930
05D 330K	20	26	33(30~36)	73				0.8	1.1		760
05D 390K	25	31	39(35~43)	86				0.9	1.2		640
05D 470K	30	38	47(42~52)	104				1.1	1.5		530
05D 560K	35	45	56(50~62)	123				1.3	1.8		450
05D 680K	40	56	68(61~75)	150				1.6	2.2		370
05D 820K	50	65	82(74~90)	145	5	400	800	2.5	4.0	0.10	300
05D 101K	60	85	100(90~110)	175				3.0	4.1		250
05D 121K	75	100	120(108~132)	210				4.0	4.9		210
05D 151K	95	125	150(135~165)	260				4.8	6.5		165
05D 181K	115	150	180(162~198)	320				5.9	7.5		140
05D 201K	130	170	200(185~225)	355				6.5	8.5		125
05D 221K	140	180	220(198~242)	380				7.0	9.0		110
05D 241K	150	200	240(216~264)	415				8.0	10.5		100
05D 271K	175	225	270(243~297)	475				8.5	11.0		95
05D 301K	190	250	300(270~330)	520				9.0	12.0		85
05D 331K	210	275	330(297~363)	570				9.5	13.0		75
05D 361K	230	300	360(324~396)	620				10.0	16.0		70
05D 391K	250	320	390(351~429)	675				12.0	17.0		65
05D 431K	275	350	430(387~473)	745				13.0	20.0		60
05D 471K	300	385	470(423~517)	810				15.0	21.0		55
05D 511K	320	415	510(459~561)	845				16.0	22.5		50
05D 561K	350	460	560(504~616)	920				16.0	24.0		45

Metal Oxide Varistors

MVR Series

MERITEK

- **07D SPECIFICATION**

Part No.	Maximum Allowable Voltage		Varistor Voltage	Clamping Voltage (Max.)		Maximum Peak Current (8/20 μ s)(A)		Maximum Energy (10/1000 s J)		Rated Power	Typical Capacitance
	Acrms (V)	DC (V)	V@1ma (V)	VC (V)	Ip (A)	standard	high surge	standard	high surge	(w)	@1KHz (pF)
07D 180K	11	14	18(15~21)	36	2.5	250	500	0.9	3.0	0.02	2800
07D 220K	14	18	22(20~24)	43				1.1	2.4		2300
07D 270K	17	22	27(24~30)	53				1.4	3.0		1800
07D 330K	20	26	33(30~36)	65				1.7	3.5		1500
07D 390K	25	31	39(35~43)	77				2.1	4.0		1300
07D 470K	30	38	47(42~52)	93				2.5	5.0		1100
07D 560K	35	45	56(50~62)	110				3.1	6.0		890
07D 680K	40	56	68(61~75)	135				3.6	7.0		740
07D 820K	50	65	82(74~90)	135	10	1200	1750	5.5	10.0	0.25	600
07D 101K	60	85	100(90~110)	165				6.5	12.0		500
07D 121K	75	100	120(108~132)	200				7.8	13.0		420
07D 151K	95	125	150(135~165)	250				9.7	13.0		330
07D 181K	115	150	180(162~198)	300				11.7	16.0		280
07D 201K	130	170	200(185~225)	340				13.0	17.0		250
07D 221K	140	180	220(198~242)	360				14.0	19.0		230
07D 241K	150	200	240(216~264)	395				15.0	21.0		210
07D 271K	175	225	270(243~297)	455				18.0	24.0		185
07D 301K	190	250	300(270~330)	500				20.0	26.0		165
07D 331K	210	275	330(297~363)	550				23.0	28.0		150
07D 361K	230	300	360(324~396)	595				25.0	32.0		140
07D 391K	250	320	390(351~429)	650				25.0	35.0		130
07D 431K	275	350	430(387~473)	710				28.0	40.0		115
07D 471K	300	385	470(423~517)	775				30.0	42.0		105
07D 511K	320	415	510(459~561)	845				30.0	45.0		100
07D 561K	350	460	560(504~616)	920				30.0	49.0		90
07D 621K	385	505	620(558~682)	1025				33.0	55.0		80
07D 681K	420	560	680(612~748)	1120				33.0	60.0		75

Metal Oxide Varistors

MVR Series

MERITEK

• 10D SPECIFICATION

Part No.	Maximum Allowable Voltage		Varistor Voltage	Clamping Voltage (Max.)		Maximum Peak Current (8/20 μ s)(A)		Maximum Energy (10/1000 s J)		Rated Power	Typical Capacitance
	Acrms (V)	DC (V)	V@1ma (V)	VC (V)	Ip (A)	standard	high surge	standard	high surge	(w)	@1KHz (pF)
10D 180K	11	14	18(15~21)	36	5	500	1000	2.1	3.0	0.05	5600
10D 220K	14	18	22(20~24)	43				2.5	5.0		4500
10D 270K	17	22	27(24~30)	53				3.0	6.0		3700
10D 330K	20	26	33(30~36)	65				4.0	7.0		3000
10D 390K	25	31	39(35~43)	77				4.6	9.0		2400
10D 470K	30	38	47(42~52)	93				5.5	11.0		2100
10D 560K	35	45	56(50~62)	110				7.0	13.0		1800
10D 680K	40	56	68(61~75)	135				8.2	15.0		1500
10D 820K	50	65	82(74~90)	135	25	2500	3500	12.0	17.0	0.4	1200
10D 101K	60	85	100(90~110)	165				15.0	18.0		1000
10D 121K	75	100	120(108~132)	200				18.0	21.0		830
10D 151K	95	125	150(135~165)	250				22.0	25.0		670
10D 181K	115	150	180(162~198)	300				27.0	30.0		560
10D 201K	130	170	200(185~225)	340				30.0	35.0		500
10D 221K	140	180	220(198~242)	360				32.0	39.0		450
10D 241K	150	200	240(216~264)	395				35.0	42.0		420
10D 271K	175	225	270(243~297)	455				40.0	49.0		370
10D 301K	190	250	300(270~330)	500				40.0	54.0		330
10D 331K	210	275	330(297~363)	550				43.0	58.0		300
10D 361K	230	300	360(324~396)	595				47.0	65.0		280
10D 391K	250	320	390(351~429)	650				60.0	70.0		260
10D 431K	275	350	430(387~473)	710				65.0	80.0		230
10D 471K	300	385	470(423~517)	775				70.0	85.0		210
10D 511K	320	415	510(459~561)	845				70.0	90.0		200
10D 561K	350	460	560(504~616)	925				70.0	92.0		180
10D 621K	385	505	620(558~682)	1025				70.0	95.0		160
10D 681K	420	560	680(612~748)	1120				70.0	98.0		150
10D 751K	460	615	750(675~825)	1240				75.0	100.0		130
10D 781K	485	640	780(702~858)	1290				80.0	105.0		130
10D 821K	510	670	820(738~902)	1355				85.0	110.0		120
10D 911K	550	745	910(819~1001)	1500				93.0	130.0		110
10D 102K	625	825	1000(900~1100)	1650				102.0	140.0		100
10D 112K	680	895	1100(990~1210)	1815				115.0	155.0		90

Metal Oxide Varistors

MVR Series

MERITEK

• 14D SPECIFICATION

Part No.	Maximum Allowable Voltage		Varistor Voltage	Clamping Voltage (Max.)		Maximum Peak Current (8/20 μ s)(A)		Maximum Energy (10/1000 s J)		Rated Power	Typical Capacitance
	Acrms (V)	DC (V)	V@1ma (V)	VC (V)	Ip (A)	standard	high surge	standard	high surge	(w)	@1KHz (pF)
14D 180K	11	14	18(15~21)	36	10	1000	2000	4.0	7.0	0.1	11100
14D 220K	14	18	22(20~24)	43				5.0	8.0		9100
14D 270K	17	22	27(24~30)	53				6.0	10.0		7400
14D 330K	20	26	33(30~36)	65				7.5	12.0		6100
14D 390K	25	31	39(35~43)	77				8.6	13.0		5100
14D 470K	30	38	47(42~52)	93				10.0	17.0		4300
14D 560K	35	45	56(50~62)	110				11.0	20.0		3600
14D 680K	40	56	68(61~75)	135				14.0	24.0		2900
14D 820K	50	65	82(74~90)	135	50	4500	6000	22.0	27.0	0.6	2400
14D 101K	60	85	100(90~110)	165				28.0	33.0		2000
14D 121K	75	100	120(108~132)	200				32.0	40.0		1700
14D 151K	95	125	150(135~165)	250				40.0	53.0		1300
14D 181K	115	150	180(162~198)	300				50.0	60.0		1100
14D 201K	130	170	200(185~225)	340				57.0	70.0		1000
14D 221K	140	180	220(198~242)	360				60.0	78.0		900
14D 241K	150	200	240(216~264)	395				63.0	84.0		830
14D 271K	175	225	270(243~297)	455				70.0	99.0		740
14D 301K	190	250	300(270~330)	500				77.0	108.0		670
14D 331K	210	275	330(297~363)	550				85.0	115.0		610
14D 361K	230	300	360(324~396)	595				93.0	130.0		560
14D 391K	250	320	390(351~429)	650				100.0	140.0		510
14D 431K	275	350	430(387~473)	710				115.0	155.0		460
14D 471K	300	385	470(423~517)	775				125.0	175.0		430
14D511K	320	415	510(459~561)	845				125.0	180.0		390
14D 561K	350	460	560(504~616)	925				125.0	185.0		360
14D 621K	385	505	620(558~682)	1025				125.0	190.0		320
14D 681K	420	560	680(612~748)	1120				130.0	200.0		290
14D 751K	460	615	750(675~825)	1240				143.0	210.0		270
14D 781K	485	640	780(702~858)	1290				148.0	220.0		260
14D 821K	510	670	820(738~902)	1355				157.0	235.0		240
14D 911K	550	745	910(819~1001)	1500				175.0	255.0		220
14D 102K	625	825	1000(900~1100)	1650				190.0	280.0		200
14D 112K	680	895	1100(990~1210)	1815				213.0	310.0		180

Metal Oxide Varistors

MVR Series

MERITEK

• 20D SPECIFICATION

Part No.	Maximum Allowable Voltage		Varistor Voltage	Clamping Voltage (Max.)		Maximum Peak Current (8/20 μ s)(A)		Maximum Energy (10/1000 s J)		Rated Power	Typical Capacitance
	Acrms (V)	DC (V)	V@1ma (V)	VC (V)	Ip (A)	standard	high surge	standard	high surge	(w)	@1KHz (pF)
20D 180K	11	14	18(16~20)	36	20	2000	3000	11.0	13.0	0.2	28500
20D 220K	14	18	22(20~24)	43				14.0	16.0		18500
20D 270K	17	22	27(24~30)	53				16.0	19.0		13000
20D 330K	20	26	33(30~36)	65				23.0	24.0		11500
20D 390K	25	31	39(35~43)	77				26.0	28.0		8500
20D 470K	30	38	47(42~52)	93				30.0	34.0		7400
20D 560K	35	45	56(50~62)	110				41.0	41.0		6500
20D 680K	40	56	68(61~75)	135				46.0	49.0		5800
20D 820K	50	65	82(74~90)	135	100	6500	10000	38.0	56.0	1.0	4900
20D 101K	60	85	100(90~110)	165				45.0	70.0		4000
20D 121K	75	100	120(108~132)	200				55.0	85.0		3300
20D 151K	95	125	150(135~165)	250				70.0	106.0		2700
20D 181K	115	150	180(162~198)	300				85.0	130.0		2200
20D 201K	130	170	200(185~225)	340				95.0	140.0		2000
20D 221K	140	180	220(198~242)	360				100.0	155.0		1800
20D 241K	150	200	240(216~264)	395				108.0	168.0		1650
20D 271K	175	225	270(243~297)	455				127.0	190.0		1500
20D 301K	190	250	300(270~330)	500				136.0	210.0		1300
20D 331K	210	275	330(297~363)	550				150.0	228.0		1200
20D 361K	230	300	360(324~396)	595				163.0	255.0		1100
20D 391K	250	320	390(351~429)	650				180.0	275.0		1000
20D 431K	275	350	430(387~473)	710				190.0	305.0		930
20D 471K	300	385	470(423~517)	775				220.0	350.0		850
20D 511K	320	415	510(459~561)	845				220.0	360.0		780
20D 561K	350	460	560(504~616)	925				220.0	380.0		710
20D 621K	385	505	620(558~682)	1025				220.0	390.0		650
20D 681K	420	560	680(612~748)	1120				230.0	400.0		600
20D 751K	460	615	750(675~825)	1240				255.0	420.0		530
20D 781K	485	640	780(702~858)	1290				265.0	440.0		510
20D 821K	510	670	820(738~902)	1355				282.0	460.0		500
20D 911K	550	745	910(819~1001)	1500				310.0	510.0		440
20D 102K	625	825	1000(900~1100)	1650				342.0	565.0		400
20D 112K	680	895	1100(990~1210)	1815				383.0	620.0		360

Metal Oxide Varistors

MVR Series

MERITEK

Part No.	Maximum Allowable Voltage		Varistor Voltage	Clamping Voltage (Max.)		Maximum Peak Current (8/20 s)(A)		Max. Energy	Rated Power	Typical Capacitance (Reference)
	AC (V)	DC (V)	V @1ma (V)	VC (V)	Ip (A)	In.	I max.	(10/1000 s J)	(w)	(pF) @1KHz
25D 201K	130	170	200(185~225)	340	150	10000	18000	190	1.2	3200
25D 221K	140	180	220(198~242)	360				200		2900
25D 241K	150	200	240(216~264)	395				220		2650
25D 271K	175	225	270(243~297)	455				255		2400
25D 301K	190	250	300(270~330)	500				275		2100
25D 331K	210	275	330(297~363)	550				300		1900
25D 361K	230	300	360(324~396)	595				330		1750
25D 391K	250	320	390(351~429)	650				360		1600
25D 431K	275	350	430(387~473)	710				380		1500
25D 471K	300	385	470(423~517)	775				400		1400
25D 511K	320	415	510(459~561)	845				420		1250
25D 561K	350	460	560(504~616)	925				440		1150
25D 621K	385	505	620(558~682)	1025				450		1050
25D 681K	420	560	680(612~748)	1120				460		950
25D 751K	460	615	750(675~825)	1240				510		850
25D 781K	485	640	780(702~858)	1290				530		800
25D 821K	510	670	820(738~902)	1355				570		750
25D 911K	550	745	910(819~1001)	1500				62		700
25D 102K	625	825	1000(900~1100)	1650				685		650
25D 112K	680	895	1100(990~1210)	1815				770		600

Metal Oxide Varistors

MVR Series

MERITEK

Part No.	Maximum Allowable Voltage		Varistor Voltage	Clamping Voltage (Max.)		Maximum Peak Current (8/20 s)(A)		Max. Energy	Rated Power	Typical Capacitance (Reference)
	AC (V)	DC (V)	V @1ma (V)	VC (V)	Ip (A)	In.	I max.	(10/1000 s J)	(w)	(pF) @1KHz
32D 201K	130	170	200(185~225)	340				250		5200
32D 221K	140	180	220(198~242)	360				270		5150
32D 241K	150	200	240(216~264)	395				290		5100
32D 271K	175	225	270(243~297)	455				300		4800
32D 301K	190	250	300(270~330)	500				330		4500
32D 331K	210	275	330(297~363)	550				360		4300
32D 361K	230	300	360(324~396)	595				380		3900
32D 391K	250	320	390(351~429)	650				400		3200
32D 431K	275	350	430(387~473)	710				430		3100
32D 471K	300	385	470(423~517)	775				460		2800
32D 511K	320	415	510(459~561)	845	200	15000	25000	510	1.4	2700
32D 561K	350	460	560(504~616)	920				570		2400
32D 621K	385	505	620(558~682)	1025				600		2200
32D 681K	420	560	680(612~748)	1120				620		2000
32D 751K	460	615	750(675~825)	1240				660		1900
32D 781K	485	640	780(702~858)	1290				700		1800
32D 821K	510	670	820(738~902)	1355				750		1300
32D 911K	550	745	910(819~1001)	1500				780		1200
32D 102K	625	825	1000(900~1100)	1650				810		1100
32D 112K	680	895	1100(990~1210)	1815				910		1000
32D 122K	750	990	1200(1080~1320)	1980				960		920

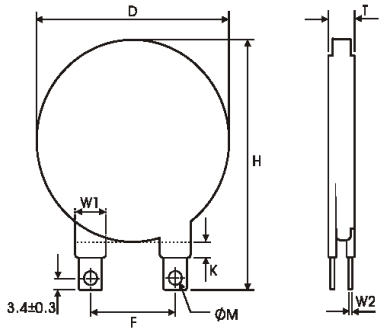

(mm)

D Max.	38.0
H Max.	56.3
W1±0.5	7.0
W2±0.1	0.5
M±0.2	3.8
F±1.0	25.4
T Max	Please check dimensions chart
K	≤5.0

Metal Oxide Varistors

MVR Series

MERITEK

Part No.	Maximum Allowable Voltage		Varistor Voltage	Clamping Voltage (Max.)		Maximum Peak Current (8/20 s)(A)		Max. Energy	Rated Power	Typical Capacitance (Reference)
	AC (V)	DC (V)	V @1ma (V)	VC (V)	Ip (A)	In.	I max.	(10/1000 s J)	(w)	(pF) @1KHz
34S 201K	130	170	200(185~225)	340	300	20000	40000	400	1.4	6750
34S 221K	140	180	220(198~242)	360				450		6400
34S 241K	150	200	240(216~264)	395				480		5650
34S 271K	175	225	270(243~297)	455				540		5100
34S 301K	190	250	300(270~330)	500				600		4510
34S 331K	210	275	330(297~363)	550				656		4150
34S 361K	230	300	360(324~396)	595				745		3750
34S 391K	250	320	390(351~429)	650				830		3500
34S 431K	275	350	430(387~473)	710				920		2950
34S 471K	300	385	470(423~517)	775				1000		2880
34S 511K	320	415	510(459~561)	845				1050		2650
34S 561K	350	460	560(504~616)	925				1150		2450
34S 621K	385	505	620(558~682)	1025				1250		2200
34S 681K	420	560	680(612~748)	1120				1250		2000
34S 751K	460	615	750(675~825)	1240				1280		1820
34S 781K	485	640	780(702~858)	1290				1350		1750
34S 821K	510	670	820(738~902)	1355				1395		1650
34S 911K	550	745	910(819~1001)	1500				1475		1500
34S 951K	575	760	950(855~1045)	1500				1485		1430
34S 102K	625	825	1000(900~1100)	1650				1550		1350
34S 112K	680	895	1100(990~1210)	1815				1700		1230
34S 122K	750	990	1200(1150~1320)	1980				1750		1135

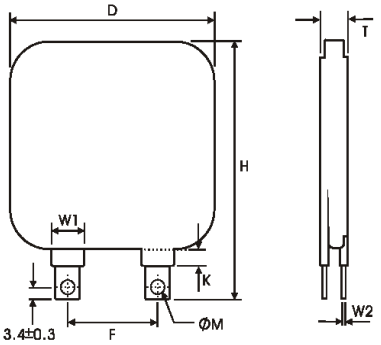

(mm)

D Max.	36
H Max.	41
W1±0.5	7.0
W2±0.1	0.5
M±0.2	3.8
F±1.0	25.4
T Max	Please check dimensions chart
K	≤5.0

Metal Oxide Varistors

MVR Series

MERITEK

Part No.	Maximum Allowable Voltage		Varistor Voltage	Clamping Voltage (Max.)		Maximum Peak Current (8/20 s)(A)		Max. Energy	Rated Power	Typical Capacitance (Reference)
	AC (V)	DC (V)	V @1ma (V)	VC (V)	Ip (A)	In.	I max.	(10/1000 s J)	(w)	(pF) @1KHz
53D 201K	130	170	200(185~225)	340	500	30000	60000	550	1.6	15000
53D 221K	140	180	220(198~242)	360				600		13750
53D 241K	150	200	240(216~264)	395				650		12500
53D 271K	175	225	270(243~297)	455				700		11000
53D 301K	190	250	300(270~330)	500				760		10000
53D 331K	210	275	330(297~363)	550		35000	70000	825		9000
53D 361K	230	300	360(324~396)	595				850		8500
53D 391K	250	320	390(351~429)	650				885		7500
53D 431K	275	350	430(387~473)	710				990		7000
53D 471K	300	385	470(423~517)	775				1080		6500
53D511K	320	415	510(459~561)	845				1150		6000
53D 561K	350	460	560(504~616)	925				1230		5500
53D 621K	385	505	620(558~682)	1025				1300		5000
53D 681K	420	560	680(612~748)	1120				1350		4500
53D 751K	460	615	750(675~825)	1240				1400		4000
53D 781K	485	640	780(702~858)	1290				1450		3900
53D 821K	510	670	820(738~902)	1355				1600		3700
53D 911K	550	745	910(819~1001)	1500				1700		3300
53D 102K	625	825	1000(900~1100)	1650				1890		3000
53D 112K	680	895	1100(990~1210)	1815				2050		2700
53D 122K	750	990	1200(1080~1320)	1980				2050		2500

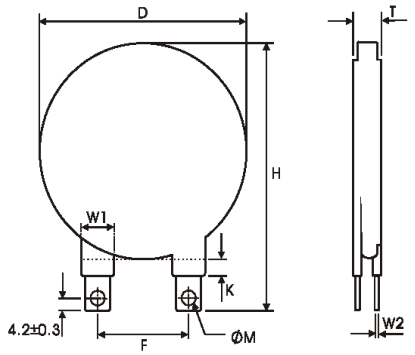

(mm)

D Max.	60
H Max.	78.2
W1±0.5	9.7
W2±0.1	0.7
M±0.2	4.15
F±1.0	25.4
T Max	Please check dimensions chart
K	≤5.0

Dimensions:

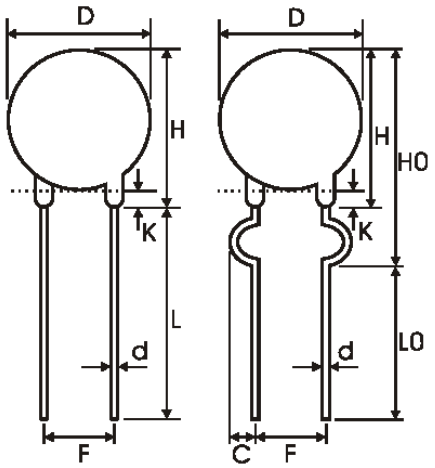

K: 3.0 max. L0: 15.0 min. L: 20.0 min.

	D MAX	H MAX	H0 MAX	d ±0.1	F ±1.0	C ±0.4
05D	7.5	10.5	13.0	0.6	5	1.2
07D	9	12	13.5	0.6	5	1.2
10D	12.5	16.5	17.5	0.8	7.5	1.4
14D	16.5	20	21	0.8	7.5	1.4
20D	23	26.5	28	1.0	10	1.4
25D	28	32		1.0	10	

T Thickness (max) (Unit:mm)

Part Code	05D	07D	10D	14D	20D	25D	32D	34S	53D
180K	4.5	4.5	4.6	4.6	4.8				
220K	4.6	4.6	4.7	4.7	4.9				
270K	4.7	4.7	4.8	4.8	5.1				
330K	4.9	4.9	5.0	5.0	5.3				
390K	4.8	4.8	5.3	5.3	5.5				
470K	4.9	4.9	5.4	5.4	5.6				
560K	5.0	5.0	5.5	5.5	5.7				
680K	5.2	5.2	5.6	5.6	5.8				
820K	4.1	4.1	4.7	4.7	4.9				
101K	4.3	4.3	4.9	4.9	5.1				
121K	4.5	4.5	5.1	5.1	5.3				
151K	4.8	4.8	5.4	5.4	5.6				
181K	4.3	4.3	4.8	4.8	5.0				
201K	4.4	4.4	5.0	5.0	5.2	5.4	6.2	6.4	6.3
221K	4.5	4.5	5.1	5.1	5.3	5.5	6.3	6.6	6.4
241K	4.6	4.6	5.2	5.2	5.4	5.6	6.4	6.7	6.5
271K	4.9	4.9	5.4	5.4	5.6	5.8	6.6	6.9	6.7
301K	5.0	5.0	5.5	5.5	5.7	5.9	6.8	7.1	6.8
331K	5.1	5.1	5.8	5.8	6.0	6.1	6.9	7.3	7.0
361K	5.2	5.2	6.0	6.0	6.2	6.4	7.1	7.6	7.2
391K	5.4	5.4	6.2	6.2	6.4	6.6	7.3	7.8	7.4
431K	5.7	5.7	6.5	6.5	6.7	6.9	7.5	8.0	7.6
471K	6.0	6.0	6.7	6.7	6.9	7.1	7.8	8.3	7.9
511K	6.2	6.2	6.8	6.8	7.0	7.2	8.0	8.7	8.1
561K	6.5	6.5	7.0	7.0	7.2	7.4	8.3	9.0	8.5
621K		7.1	7.3	7.3	7.5	7.7	8.7	9.4	8.8
681K		7.3	7.6	7.6	7.8	8.0	9.0	9.5	9.1
751K			8.0	8.0	8.2	8.4	9.4	10.0	9.5
781K			8.1	8.1	8.3	8.5	9.6	10.2	9.7
821K			8.3	8.3	8.5	8.7	9.8	10.8	9.9
911K			8.8	8.8	9.0	9.2	10.4	11.2	10.5
102K			9.3	9.3	9.5	9.7	11.2	11.2	11.3
112K			9.9	9.9	10.1	10.3	11.8	12.3	11.9

Компания «ЭлектроПласт» предлагает заключение долгосрочных отношений при поставках импортных электронных компонентов на взаимовыгодных условиях!

Наши преимущества:

- Оперативные поставки широкого спектра электронных компонентов отечественного и импортного производства напрямую от производителей и с крупнейших мировых складов;
- Поставка более 17-ти миллионов наименований электронных компонентов;
- Поставка сложных, дефицитных, либо снятых с производства позиций;
- Оперативные сроки поставки под заказ (от 5 рабочих дней);
- Экспресс доставка в любую точку России;
- Техническая поддержка проекта, помощь в подборе аналогов, поставка прототипов;
- Система менеджмента качества сертифицирована по Международному стандарту ISO 9001;
- Лицензия ФСБ на осуществление работ с использованием сведений, составляющих государственную тайну;
- Поставка специализированных компонентов (Xilinx, Altera, Analog Devices, Intersil, Interpoint, Microsemi, Aeroflex, Peregrine, Syfer, Eurofarad, Texas Instrument, Miteq, Cobham, E2V, MA-COM, Hittite, Mini-Circuits,General Dynamics и др.);

Помимо этого, одним из направлений компании «ЭлектроПласт» является направление «Источники питания». Мы предлагаем Вам помощь Конструкторского отдела:

- Подбор оптимального решения, техническое обоснование при выборе компонента;
- Подбор аналогов;
- Консультации по применению компонента;
- Поставка образцов и прототипов;
- Техническая поддержка проекта;
- Защита от снятия компонента с производства.

Как с нами связаться

Телефон: 8 (812) 309 58 32 (многоканальный)
Факс: 8 (812) 320-02-42
Электронная почта: org@eplast1.ru
Адрес: 198099, г. Санкт-Петербург, ул. Калинина, дом 2, корпус 4, литера А.