THIS DRAWING IS UNPUBLISHED. RELEASED FOR PUBLICATION 2007
© COPYRIGHT 2007 BY - ALL RIGHTS RESERVED.

LOC	DIST
GP	00

REVISIONS

P	LTR	DESCRIPTION	DATE	DWN	APVD
	A1	RELEASED PER ECR-11-007241	08APR2011	AL	CW
	A2	REVISED PER ECO-14-012634	18AUG2014	RG	MC

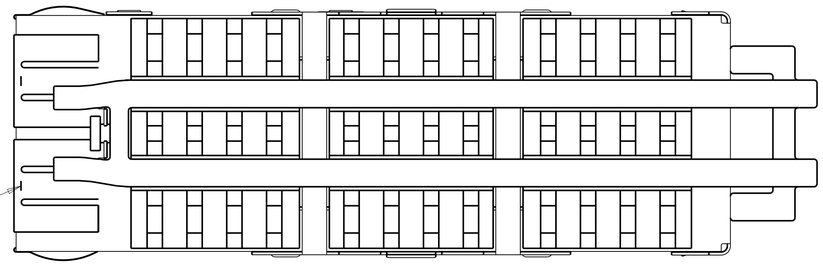

1. MATERIAL:
   CAGE: NICKEL SILVER, 0.25 THICK
   HEAT SINK: ALUMINUM
   HEAT SINK CLIP: STAINLESS STEEL
   EMI SPRINGS: COPPER ALLOY
   LIGHT PIPE: CLEAR POLYCARBONATE.
2. MINIMUM PITCH DIMENSION.
3. MATES WITH SFF-8436 COMPATIBLE TRANSCEIVER.
4. REFERENCE APPLICATION SPEC 114-13217 FOR RECOMMENDED DRILL HOLE DIAMETER AND PLATING THICKNESS.
5. DATUMS AND BASIC DIMENSIONS ESTABLISHED BY CUSTOMER.
6. MINIMUM PC BOARD THICKNESS:
   SINGLE SIDED = 1.45mm (shown, pg. 4)
   DOUBLE SIDED = 2.2mm.
7. HEATSINK, LIGHT PIPE, AND CLIP SHIPPED ASSEMBLED TO CAGE ASSEMBLY. CAGE ASSEMBLY MAY BE PRESSED INTO THE PCB AS SHIPPED
8. DATUM -A- IS TOP SURFACE OF HOST BOARD.
9. SURFACE TRACES PERMITTED WITHIN THIS LENGTH EXCEPT WHERE CAGE STANDOFFS, SHOWN IN DETAIL J, CONTACT PC BOARD.
10. DIMENSION APPLIES WITH MODULE INSTALLED IN CAGE.
11. MAXIMUM HEIGHT OF CUSTOMER SUPPLIED LED OFF BOARD: 1.70mm.
12. DATE CODE (YYWWD) MARKED ON TOP OF CAGE AND CONCEALED BY HEAT SINK APPLIES TO CAGE ASSEMBLY ONLY.
13. HEAT SINK AND CLIP SHIPPED ASSEMBLED TO CAGE ASSEMBLY. CAGE ASSEMBLY MAY BE PRESSED INTO THE PCB AS SHIPPED. LIGHT PIPE MUST BE ASSEMBLED BY CUSTOMER AFTER THE CAGE IS SEATED ON THE PCB.
14. SPRING FINISH: 0.8um MIN TIN OVER 0.8um MIN NICKEL. NON-PLATED EDGES PERMISSIBLE.
    HEAT SINK FINISH: NICKEL.
15. PRODUCT HAS NOT COMPLETED QUALIFICATION TESTING.

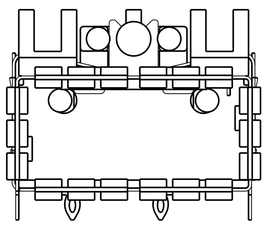

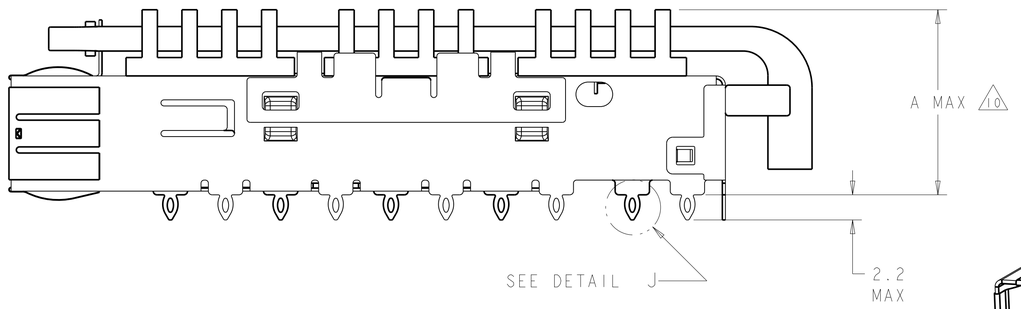

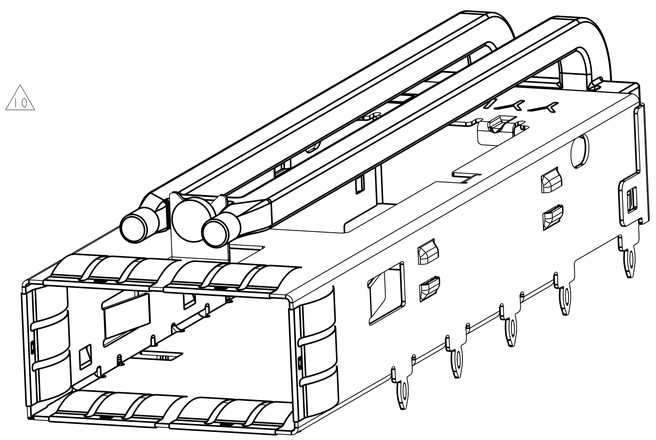

1888971-4 AS SHOWN
SCALE 5:1

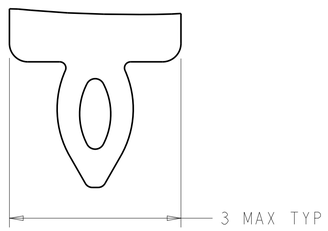

DETAIL J 9
SCALE 20:1

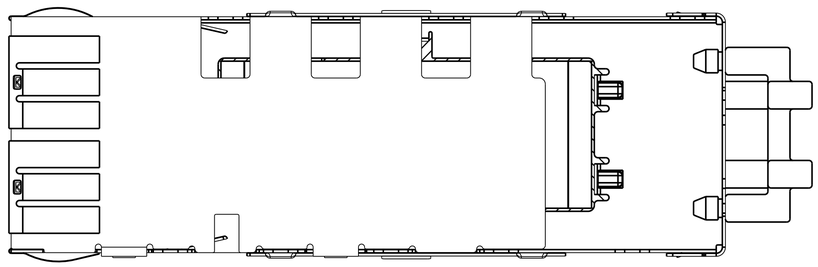

A	DESCRIPTION	PART NUMBER
-	NO HEAT SINK	1888971-4
13 13.7	PCI HEAT SINK	1888971-3
7 23.0	NETWORKING HEAT SINK	1888971-2
7 16.0	SAN HEAT SINK (SHOWN)	1888971-1

THIS DRAWING IS A CONTROLLED DOCUMENT.

DIMENSIONS: mm

TOLERANCES UNLESS OTHERWISE SPECIFIED:
0 PLC ±0.13
1 PLC ±0.13
2 PLC ±0.13
3 PLC ±0.013
4 PLC ±0.0001
ANGLES ±

MATERIAL 1
FINISH 14

DWN C. VALENTINE 22FEB2007
CHK E. BRIGHT 22FEB2007
APVD E. BRIGHT 22FEB2007
PRODUCT SPEC 108-2286
APPLICATION SPEC 114-13217
WEIGHT -

TE Connectivity

NAME CAGE ASSEMBLY, THRU BEZEL, QSFP, W/ HEAT SINK AND DOUBLE LIGHT PIPE
-

SIZE	CAGE CODE	DRAWING NO	RESTRICTED TO
A1	00779	C-1888971	-

Customer Drawing SCALE 4:1 SHEET 1 OF 4 REV A2

THIS DRAWING IS UNPUBLISHED. RELEASED FOR PUBLICATION 2007
© COPYRIGHT 2007 BY - ALL RIGHTS RESERVED.

LOC	DIST
GP	00

REVISIONS

P	LTR	DESCRIPTION	DATE	DWN	APVD
	-	SEE SHEET 1	-	-	-

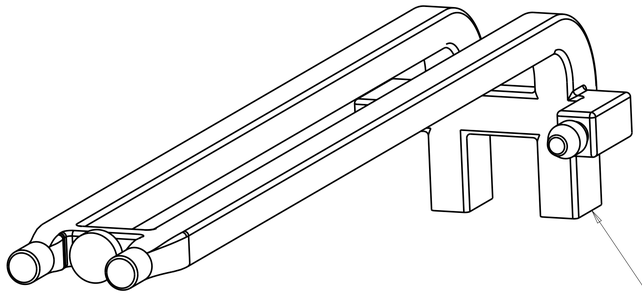

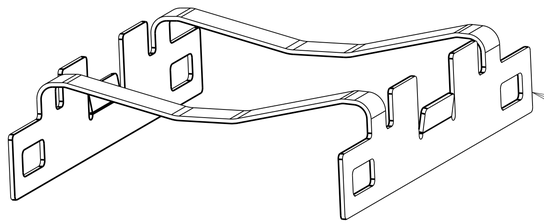

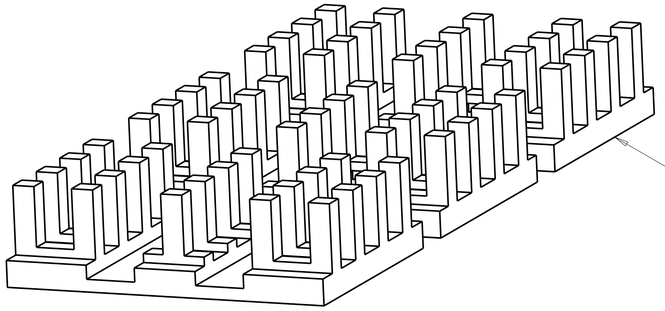

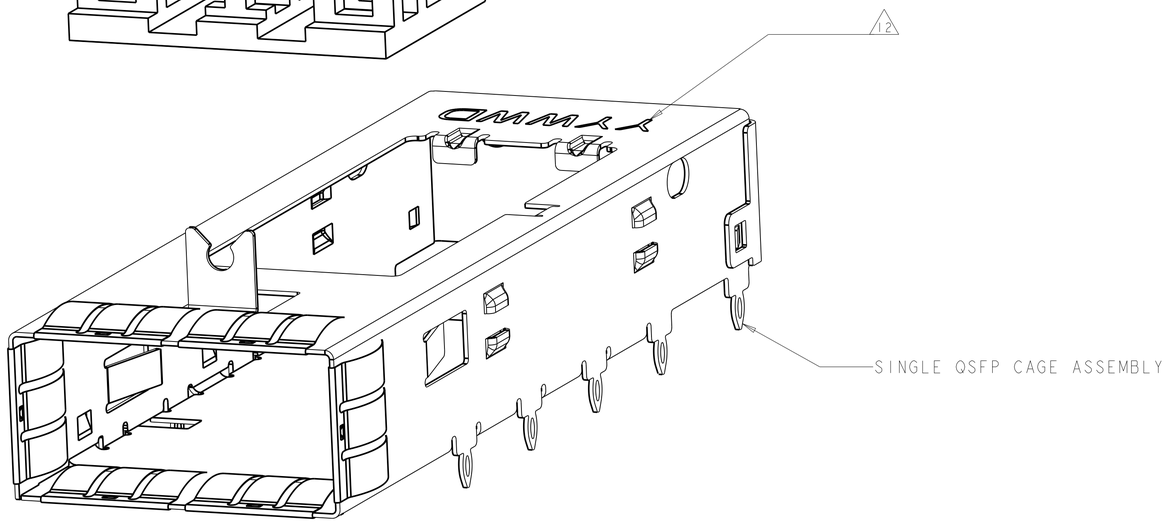

ISOMETRIC EXPLODED VIEW
SCALE 6:1

THIS DRAWING IS A CONTROLLED DOCUMENT.

DIMENSIONS: mm

TOLERANCES UNLESS OTHERWISE SPECIFIED:

0 PLC	±0.13
1 PLC	±0.13
2 PLC	±0.13
3 PLC	±0.013
4 PLC	±0.0001
ANGLES	±-

MATERIAL - -

FINISH - -

DWN C. VALENTINE 22FEB2007
CHK E. BRIGHT 22FEB2007
APVD E. BRIGHT 22FEB2007

PRODUCT SPEC 108-2286
APPLICATION SPEC 114-13217
WEIGHT -

TE Connectivity

NAME CAGE ASSEMBLY, THRU BEZEL, QSFP, W/ HEAT SINK AND DOUBLE LIGHT PIPE -

SIZE	CAGE CODE	DRAWING NO	RESTRICTED TO
A1	00779	C-1888971	-

Customer Drawing

SCALE	SHEET	OF	REV
4:1	2	4	A2

4805 (3/11)

THIS DRAWING IS UNPUBLISHED. RELEASED FOR PUBLICATION 2007
© COPYRIGHT 2007 BY - ALL RIGHTS RESERVED.

LOC	DIST
GP	00

REVISIONS

P	LTR	DESCRIPTION	DATE	DWN	APVD
	-	SEE SHEET 1	-	-	-

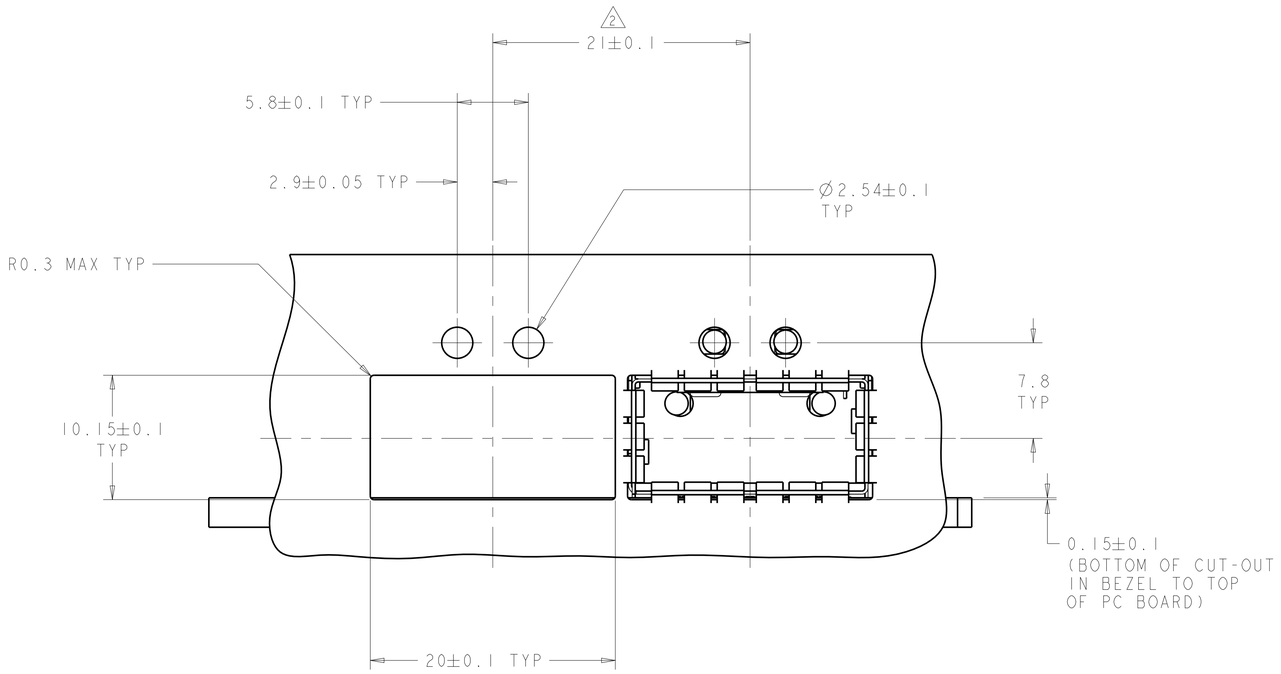

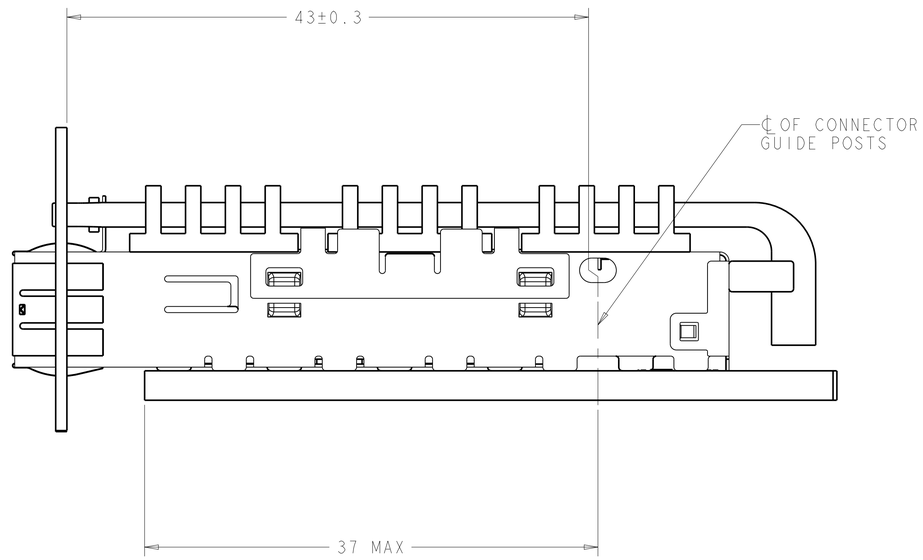

THIS DRAWING IS A CONTROLLED DOCUMENT.

DIMENSIONS: mm

TOLERANCES UNLESS OTHERWISE SPECIFIED:

0 PLC	±0.13
1 PLC	±0.13
2 PLC	±0.13
3 PLC	±0.013
4 PLC	±0.0001
ANGLES	±-

MATERIAL - -

FINISH - -

DWN C. VALENTINE 22FEB2007
CHK E. BRIGHT 22FEB2007
APVD E. BRIGHT 22FEB2007

PRODUCT SPEC 108-2286
APPLICATION SPEC 114-13217
WEIGHT -

TE Connectivity

NAME CAGE ASSEMBLY, THRU BEZEL, QSFP, W/ HEAT SINK AND DOUBLE LIGHT PIPE -

SIZE	CAGE CODE	DRAWING NO	RESTRICTED TO
A1	00779	C-1888971	-

Customer Drawing

SCALE	SHEET	OF	REV
4:1	3	4	A2

4805 (3/11)

THIS DRAWING IS UNPUBLISHED. RELEASED FOR PUBLICATION 2007
© COPYRIGHT 2007 BY - ALL RIGHTS RESERVED.

LOC	DIST
GP	00

REVISIONS

P	LTR	DESCRIPTION	DATE	DWN	APVD
	-	SEE SHEET 1	-	-	-

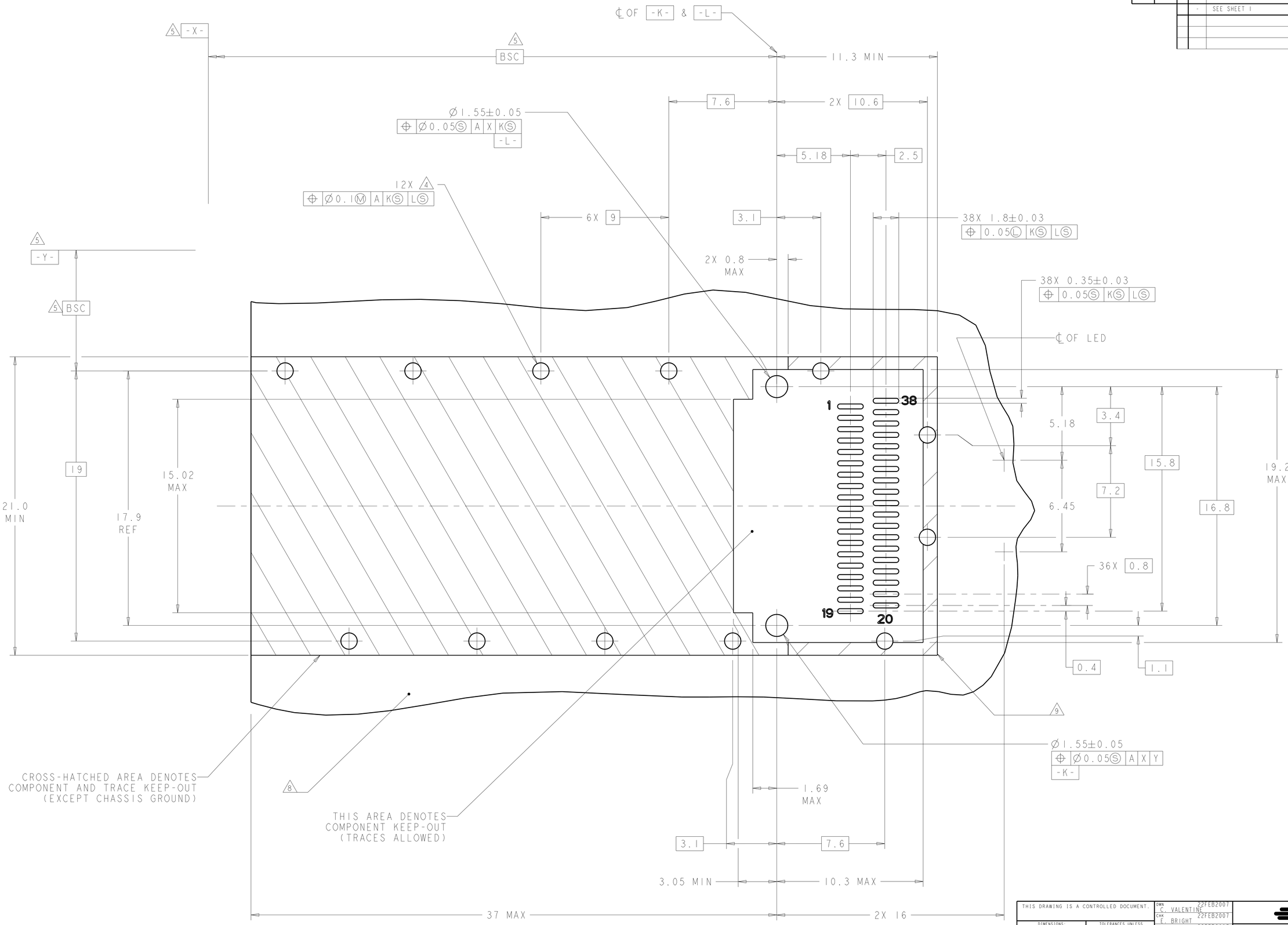

RECOMMENDED PC BOARD LAYOUT
SCALE 8:1

THIS DRAWING IS A CONTROLLED DOCUMENT.

DIMENSIONS: mm

TOLERANCES UNLESS OTHERWISE SPECIFIED:
0 PLC ±0.13
1 PLC ±0.13
2 PLC ±0.13
3 PLC ±0.013
4 PLC ±0.0001
ANGLES ±

MATERIAL - -
FINISH - -

DWN C. VALENTINE 22FEB2007
CHK E. BRIGHT 22FEB2007
APVD E. BRIGHT 22FEB2007
PRODUCT SPEC 108-2286
APPLICATION SPEC 114-13217
WEIGHT -

TE Connectivity

NAME CAGE ASSEMBLY, THRU BEZEL, QSFP, W/ HEAT SINK AND DOUBLE LIGHT PIPE
-

SIZE	CAGE CODE	DRAWING NO	RESTRICTED TO
A1	00779	C-1888971	-

Customer Drawing

SCALE	SHEET	OF	REV
4:1	4	4	A2

4805 (3/11)

Компания «ЭлектроПласт» предлагает заключение долгосрочных отношений при поставках импортных электронных компонентов на взаимовыгодных условиях!

Наши преимущества:

- Оперативные поставки широкого спектра электронных компонентов отечественного и импортного производства напрямую от производителей и с крупнейших мировых складов;
- Поставка более 17-ти миллионов наименований электронных компонентов;
- Поставка сложных, дефицитных, либо снятых с производства позиций;
- Оперативные сроки поставки под заказ (от 5 рабочих дней);
- Экспресс доставка в любую точку России;
- Техническая поддержка проекта, помощь в подборе аналогов, поставка прототипов;
- Система менеджмента качества сертифицирована по Международному стандарту ISO 9001;
- Лицензия ФСБ на осуществление работ с использованием сведений, составляющих государственную тайну;
- Поставка специализированных компонентов (Xilinx, Altera, Analog Devices, Intersil, Interpoint, Microsemi, Aeroflex, Peregrine, Syfer, Eurofarad, Texas Instrument, Miteq, Cobham, E2V, MA-COM, Hittite, Mini-Circuits,General Dynamics и др.);

Помимо этого, одним из направлений компании «ЭлектроПласт» является направление «Источники питания». Мы предлагаем Вам помощь Конструкторского отдела:

- Подбор оптимального решения, техническое обоснование при выборе компонента;
- Подбор аналогов;
- Консультации по применению компонента;
- Поставка образцов и прототипов;
- Техническая поддержка проекта;
- Защита от снятия компонента с производства.

Как с нами связаться

Телефон: 8 (812) 309 58 32 (многоканальный)
Факс: 8 (812) 320-02-42
Электронная почта: org@eplast1.ru
Адрес: 198099, г. Санкт-Петербург, ул. Калинина, дом 2, корпус 4, литера А.