THIS DRAWING IS UNPUBLISHED. RELEASED FOR PUBLICATION -
© COPYRIGHT copyright dgte- ALL RIGHTS RESERVED.

LOC	DIST
GP	00

REVISIONS

P	LTR	DESCRIPTION	DATE	DWN	APVD
	A	INITIAL RELEASE	10SAUG2015	JW	SH

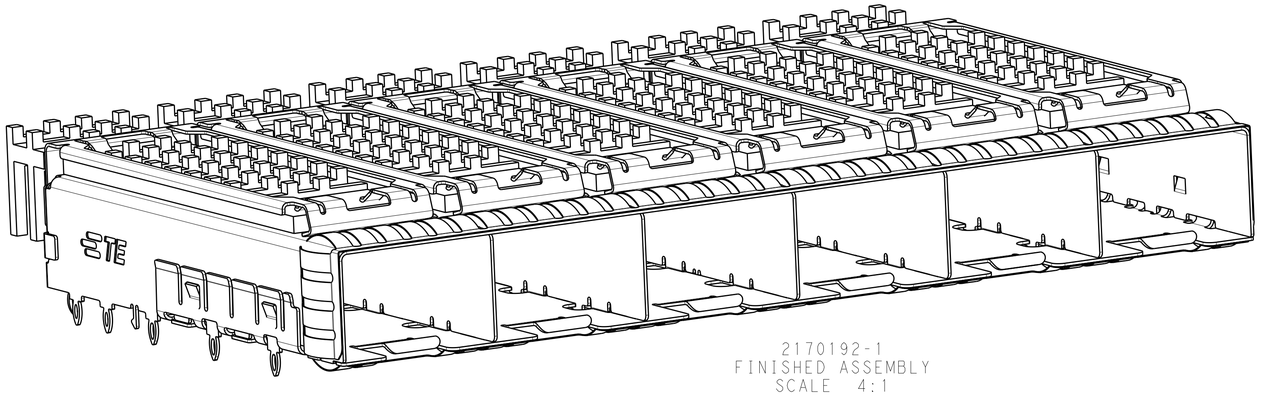

2170192-1
FINISHED ASSEMBLY
SCALE 4:1

1. MATERIAL:
   CAGE ASSEMBLY: 0.25mm THICK NICKEL SILVER ALLOY.
   HEATSINK CLIP: STAINLESS STEEL
   HEATSINK: ALUMINUM

2. FINISH:
   SPRINGS: MINIMUM OF 0.8um TIN PLATE OVER A MINIMUM OF 0.8um NICKEL UNDERPLATE. NON-PLATED EDGES PERMISSIBLE.
   HEATSINK CLIP: PASSIVATE
   2170192-1/-2 HEATSINK:HARD ANODIC COATING
   2170192-3 HEATSINK: BLACK ANODIZE

3. MATES WITH SFP MSA COMPLIANT TRANSCEIVERS.

4. PADS AND VIAS CHASSIS GROUND.

5. INTERPRETATION OF DATUM REFERENCE FRAME IN ACCORDANCE WITH SECT 4.4.1.1 OF ASME Y14.5M-1994.

6. MINIMUM PC BOARD THICKNESS:
   SINGLE SIDED = 1.50
   DOUBLE SIDED = 2.25

7. HOLE PATTERN REPEATS FOR EACH PORT. SPACING BETWEEN PORTS IS 14.25mm.

8. DATUM AND BASIC DIMENSION ESTABLISHED BY CUSTOMER.

9. REFERENCE APPLICATION SPEC. 114-13120, HOLE A, FOR RECOMMENDED DRILL HOLE DIAMETER AND PLATING THICKNESS.

10. REFERENCE APPLICATION SPEC. 114-13120, HOLE B, FOR RECOMMENDED DRILL HOLE DIAMETER AND PLATING THICKNESS.

11. CERTAIN MATING TRANCEIVERS MAY REQUIRE ADDITIONAL PCB THICKNESS THAT WOULD BE DETERMINED BY THE CUSTOMER.

12. PRODUCT COMPLIES WITH SPECIFICATION SFF-8433 IMPROVED PLUGGABLE FORM FACTOR FOR SFP+ GANGED CAGES.

13. DIMENSION APPLIES PRIOR TO INSERTION OF SFP MODULE

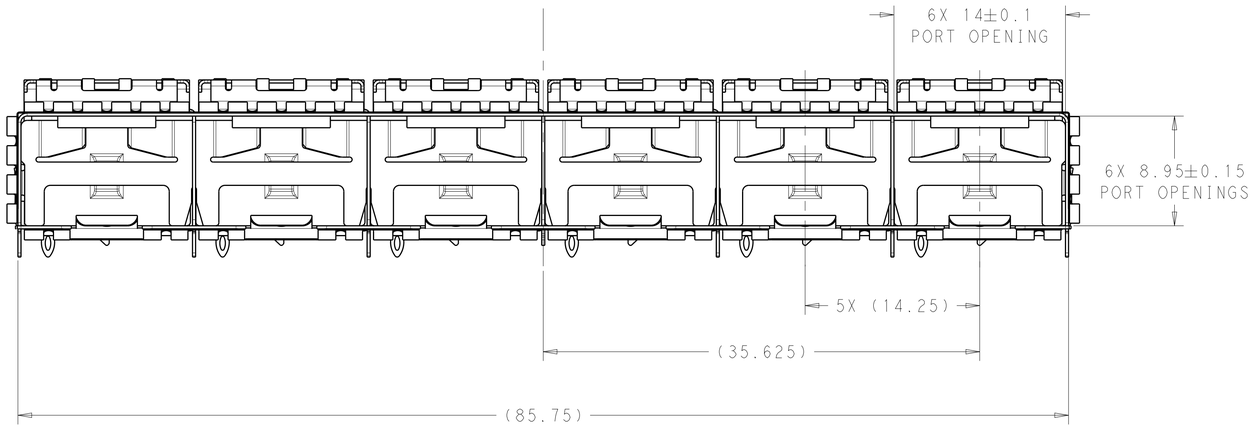

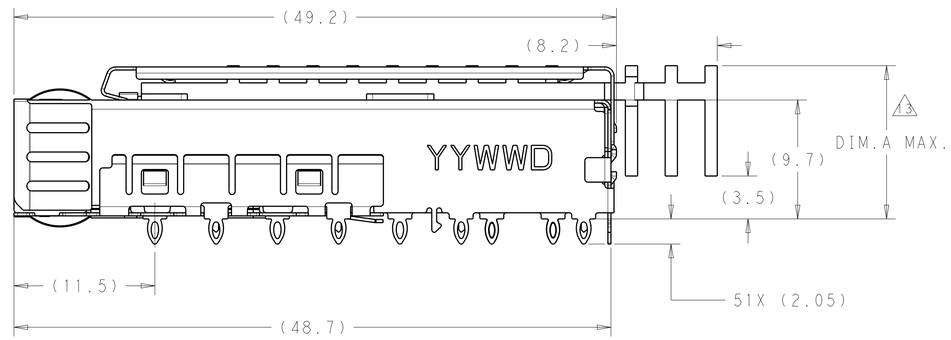

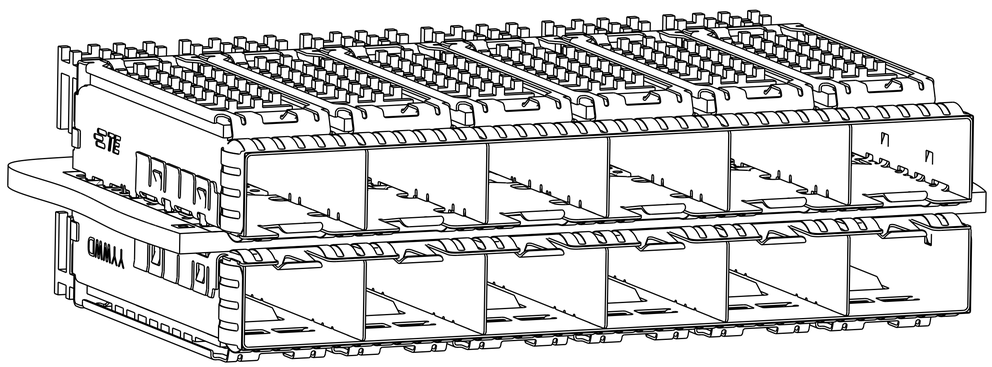

2170192-1
MOUNTED BELLY TO BELLY ON PCB
SCALE 3:1

PRELIMINARY	13.10 MAX.(WORKING)	FIN TYPE	HEAT SINK W/ THE FIRST ROW PIN	2170192-3
	20.2 MAX	PIN TYPE	HEAT SINK W/ THE FIRST ROW PIN	2170192-2
	13 MAX	PIN TYPE	HEAT SINK W/O THE FIRST ROW PIN	2170192-1
	A	HEAT SINK	DESCRIPTION	PART NUMBER

THIS DRAWING IS A CONTROLLED DOCUMENT.

DIMENSIONS: mm

TOLERANCES UNLESS OTHERWISE SPECIFIED:
0 PLC ±0.25
1 PLC ±0.20
2 PLC ±0.15
3 PLC ±0.1
4 PLC ±0.1
ANGLES ±1°

MATERIAL 1 | FINISH 2

DWN TIM XUE 22NOV2011
CHK ALEX CAI 22NOV2011
APVD ALEX CAI 22NOV2011

PRODUCT SPEC 108-2364
APPLICATION SPEC 114-13120
WEIGHT -

TE Connectivity

NAME SFP+ ENHANCED 1X6 CAGE ASSEMBLY, PRESS FIT, EXTERNAL EMI SPRINGS WITH HEATSINK

SIZE	CAGE CODE	DRAWING NO	RESTRICTED TO
A1	00779	C-2170192	-

Customer Drawing | SCALE 4:1 | SHEET 1 OF 5 | REV A

THIS DRAWING IS UNPUBLISHED. RELEASED FOR PUBLICATION -
© COPYRIGHT copyright dgfe- ALL RIGHTS RESERVED.

LOC	DIST
GP	00

REVISIONS

P	LTR	DESCRIPTION	DATE	DWN	APVD
	-	SEE SHEET 1	-	-	-

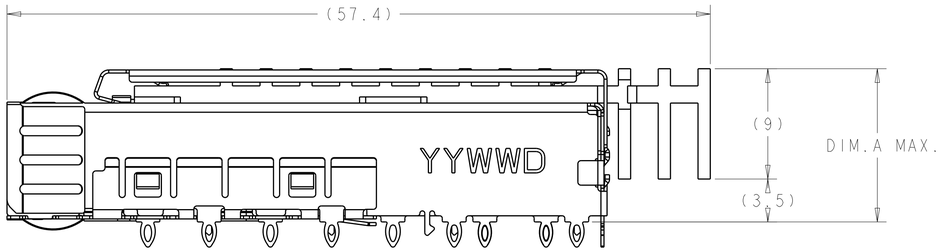

2170192-1 AS SHOWN
HEAT SINK W/O THE FIRST ROW PIN

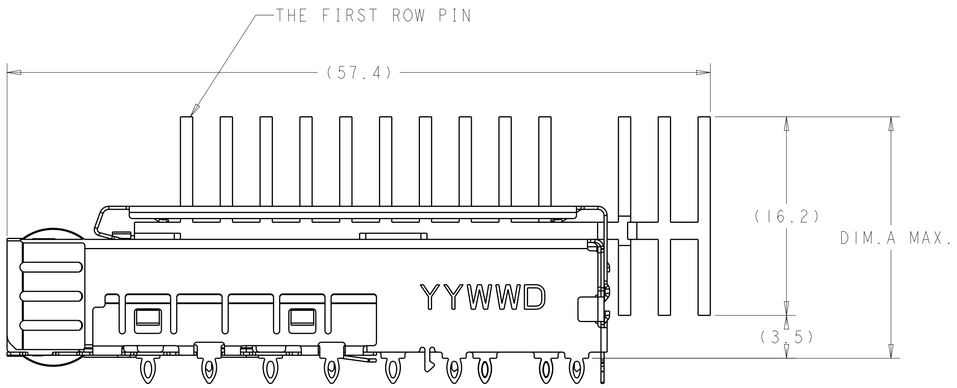

2170192-2 AS SHOWN

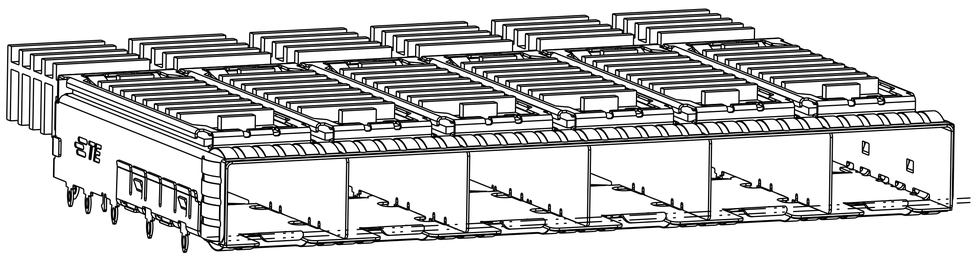

2170192-3 AS SHOWN

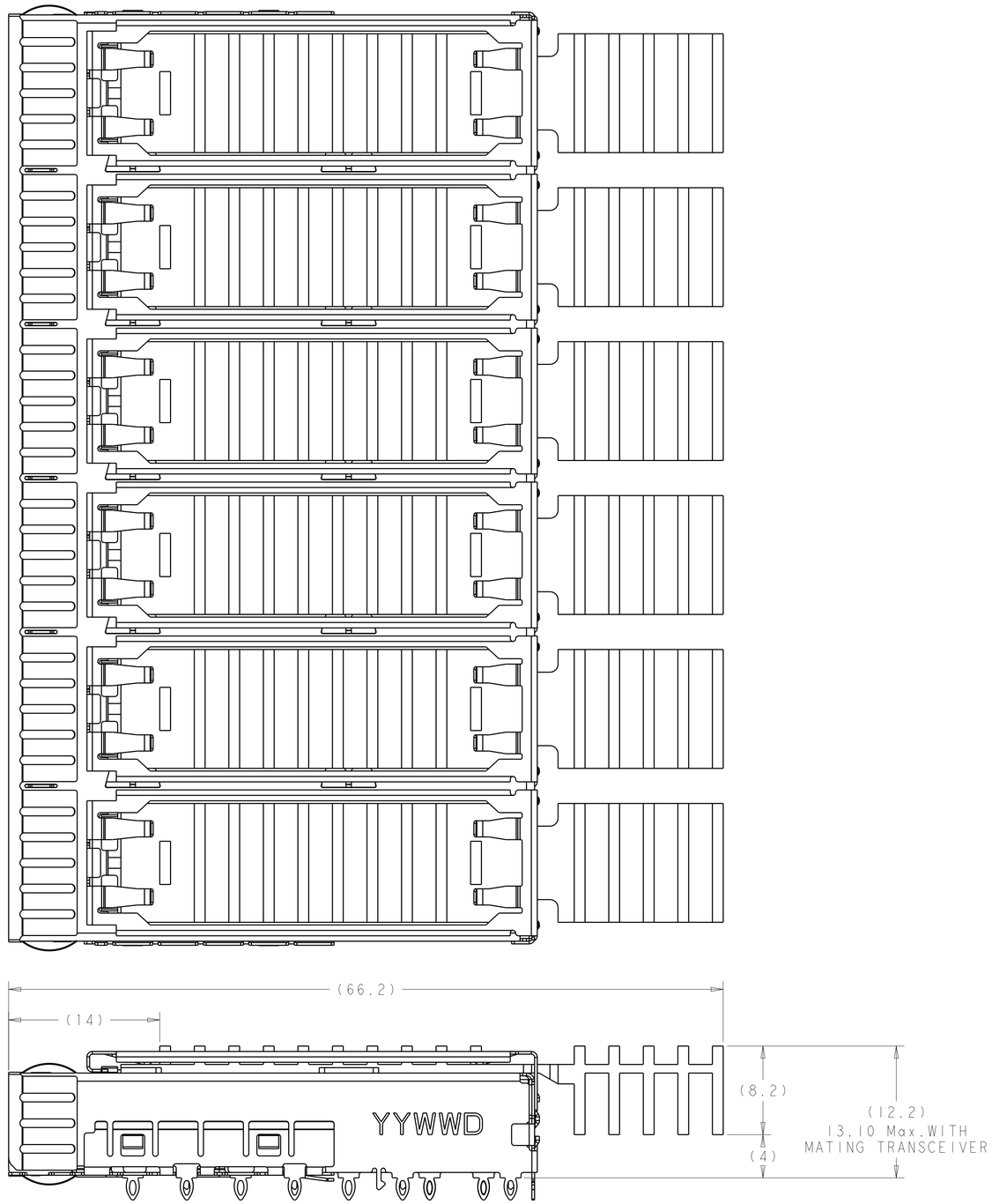

2170192-3 AS SHOWN

THIS DRAWING IS A CONTROLLED DOCUMENT.

DIMENSIONS: mm

TOLERANCES UNLESS OTHERWISE SPECIFIED:
0 PLC ±0.25
1 PLC ±0.20
2 PLC ±0.15
3 PLC ±0.1
4 PLC ±0.1
ANGLES ±1°

MATERIAL
FINISH

DWN	TIM XUE	22NOV2011
CHK	ALEX CAI	22NOV2011
APVD	ALEX CAI	22NOV2011
PRODUCT SPEC	108-2364	
APPLICATION SPEC	114-13120	
WEIGHT	-	

TE Connectivity

NAME: SFP+ ENHANCED 1X6 CAGE ASSEMBLY, PRESS FIT, EXTERNAL EMI SPRINGS WITH HEATSINK

SIZE	CAGE CODE	DRAWING NO	RESTRICTED TO
A1	00779	C-2170192	-

Customer Drawing | SCALE 4:1 | SHEET 2 OF 5 | REV A

THIS DRAWING IS UNPUBLISHED. RELEASED FOR PUBLICATION -
© COPYRIGHT copyright dgtc- ALL RIGHTS RESERVED.

LOC	DIST
GP	00

REVISIONS

P	LTR	DESCRIPTION	DATE	DWN	APVD
	-	SEE SHEET 1	-	-	-

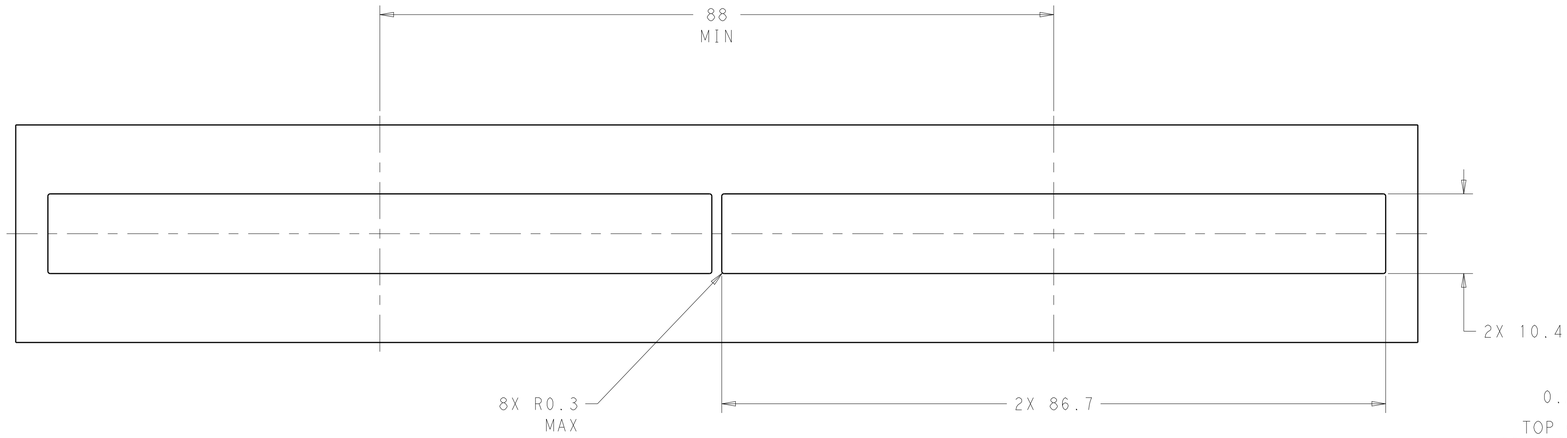

RECOMMENDED BEZEL CUT-OUT
SINGLE SIDED APPLICATIONS
SCALE 5:2

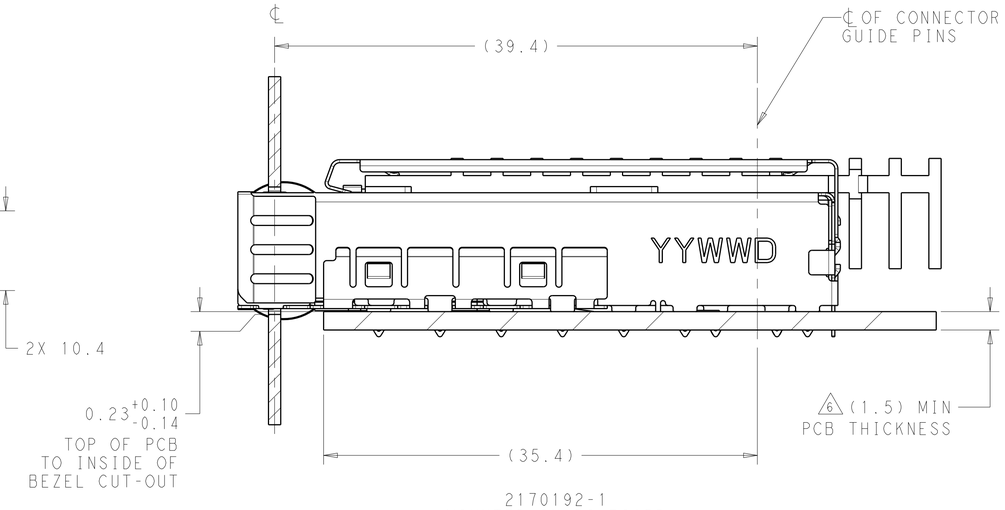

2170192-1
MOUNTED ON PC BOARD
SHOWN THRU RECOMMENDED BEZEL

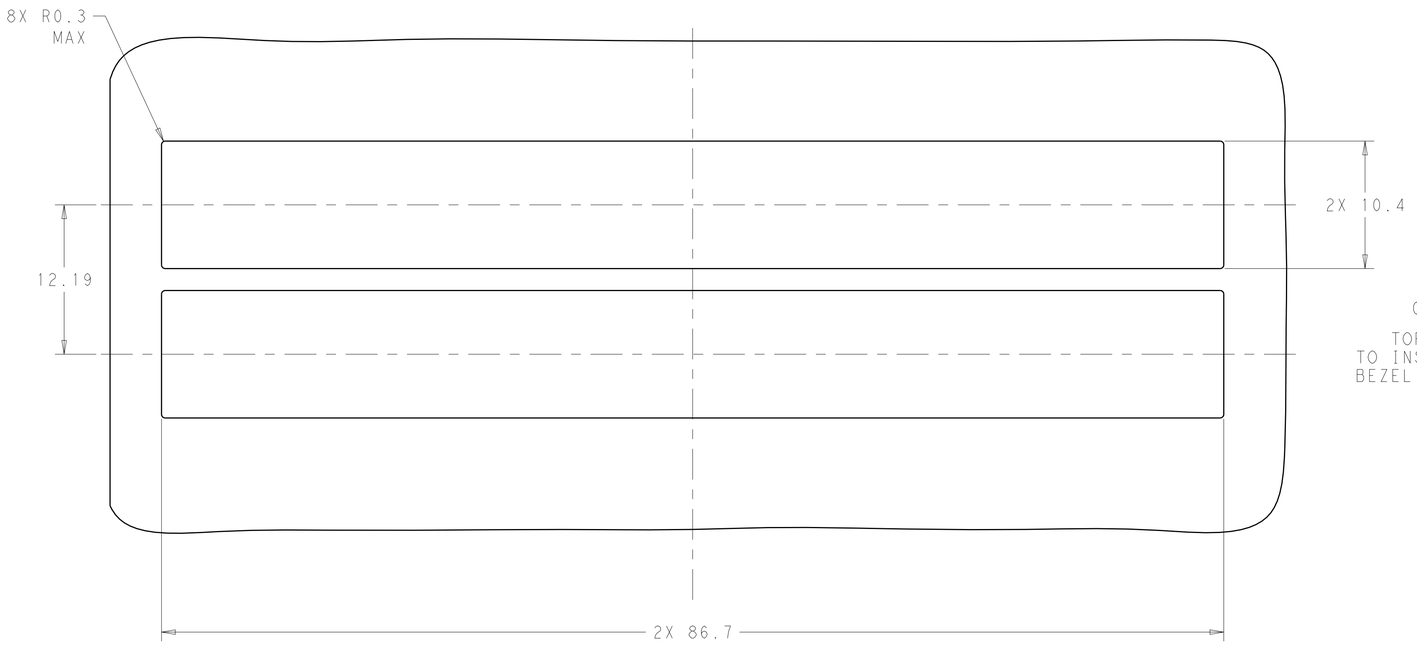

RECOMMENDED BEZEL CUT-OUT
BELLY TO BELLY APPLICATIONS

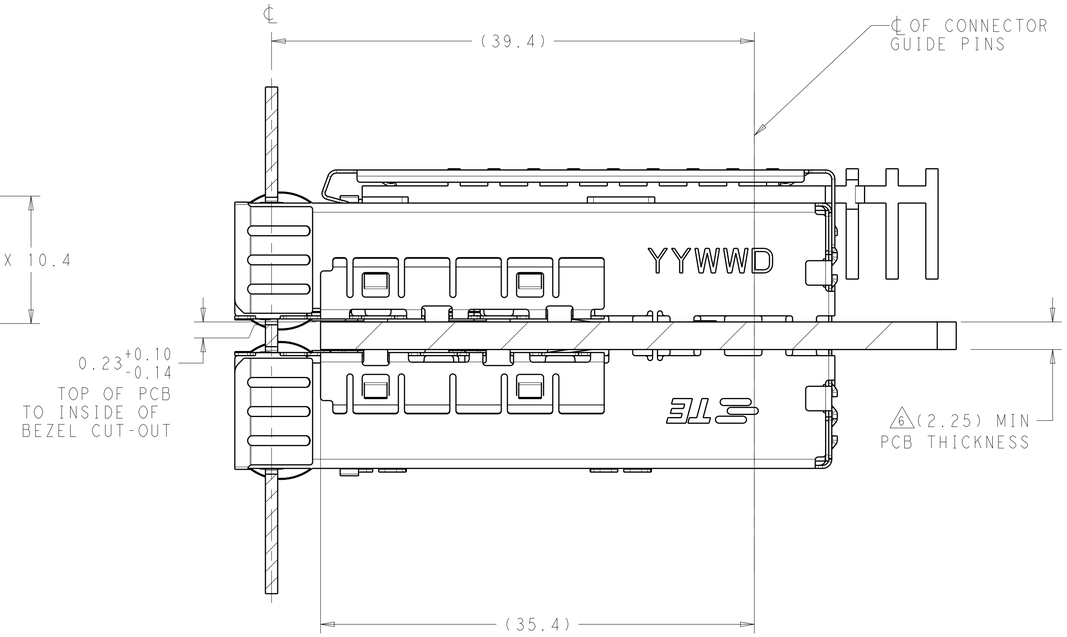

2170192-1
MOUNTED BELLY TO BELLY ON PC BOARD
SHOWN THRU RECOMMENDED BEZEL

THIS DRAWING IS A CONTROLLED DOCUMENT.

DIMENSIONS: mm

TOLERANCES UNLESS OTHERWISE SPECIFIED:
0 PLC ±0.25
1 PLC ±0.20
2 PLC ±0.15
3 PLC ±0.1
4 PLC ±0.1
ANGLES ±1°

MATERIAL 1
FINISH

DWN TIM XUE 22NOV2011
CHK ALEX CAI 22NOV2011
APVD ALEX CAI 22NOV2011
PRODUCT SPEC 108-2364
APPLICATION SPEC 114-13120
WEIGHT -

TE Connectivity

NAME SFP+ ENHANCED 1X6 CAGE ASSEMBLY, PRESS FIT, EXTERNAL EMI SPRINGS WITH HEATSINK

SIZE	CAGE CODE	DRAWING NO	RESTRICTED TO
A1	00779	C-2170192	-

Customer Drawing

SCALE	SHEET	OF	REV
4:1	3	5	A

THIS DRAWING IS UNPUBLISHED. RELEASED FOR PUBLICATION -
© COPYRIGHT copyright.dgkc- ALL RIGHTS RESERVED.

LOC	DIST
GP	00

REVISIONS

P	LTR	DESCRIPTION	DATE	DWN	APVD
	-	SEE SHEET 1	-	-	-

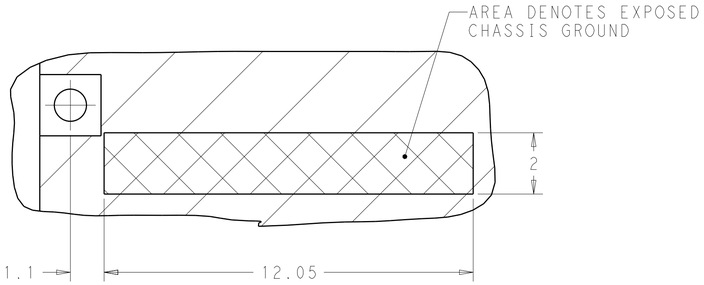

DETAIL A
6X INDIVIDUALLY
SCALE 10:1

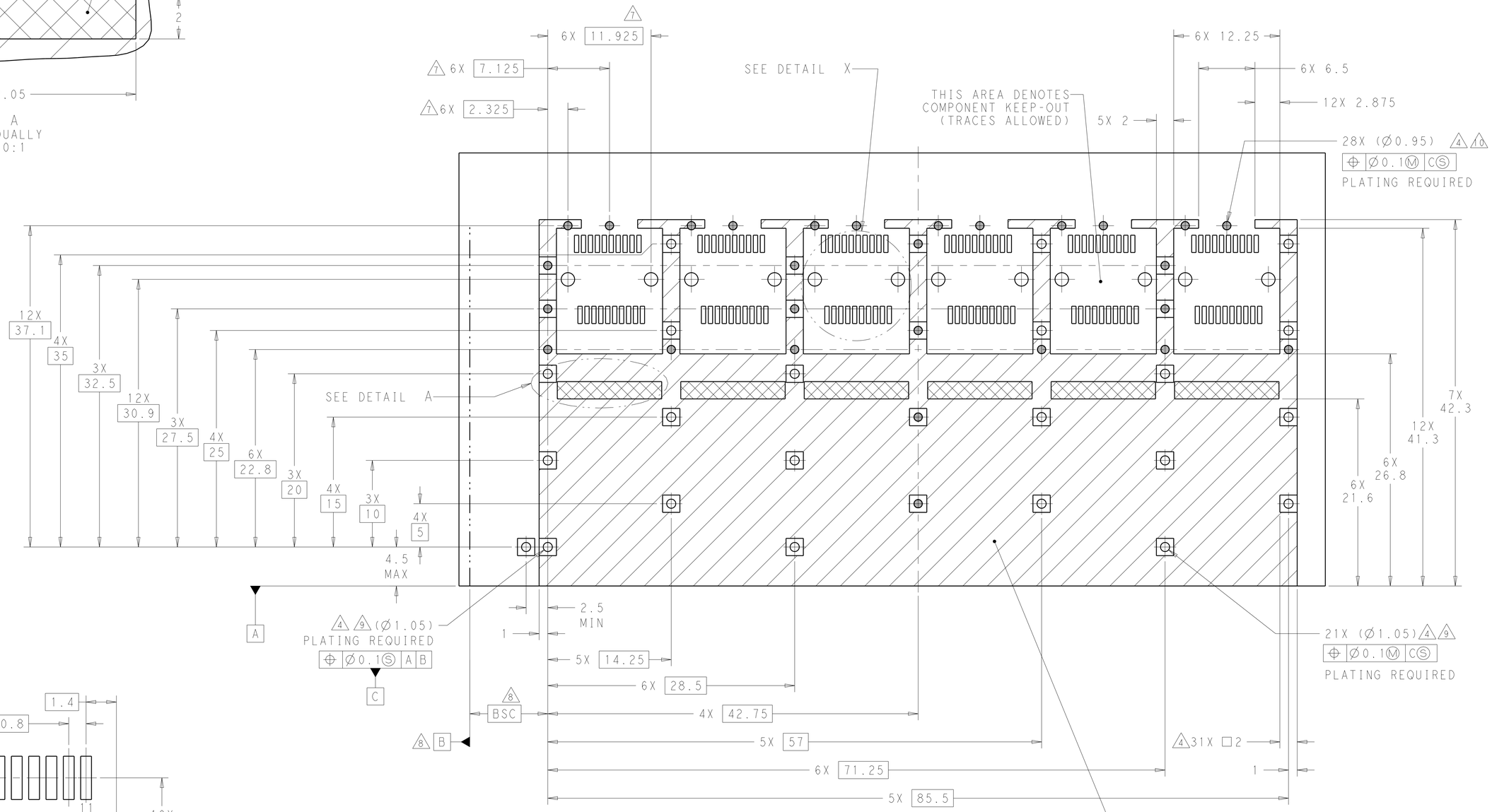

RECOMMENDED PCB CONFIGURATION
WITH KEEP-OUT AREAS
SINGLE SIDED APPLICATIONS
SCALE 4:1

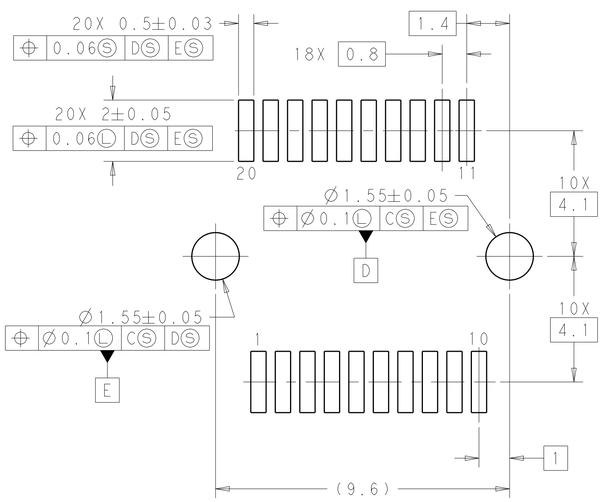

DETAIL X
RECOMMENDED PT CONNECTOR LAYOUT
6X INDIVIDUALLY
SCALE 10:1

THIS DRAWING IS A CONTROLLED DOCUMENT.

DIMENSIONS: mm

TOLERANCES UNLESS OTHERWISE SPECIFIED:
0 PLC ±0.25
1 PLC ±0.20
2 PLC ±0.15
3 PLC ±0.1
4 PLC ±0.1
ANGLES ±1°

MATERIAL 1
FINISH

DWN	TIM XUE	22NOV2011
CHK	ALEX CAI	22NOV2011
APVD	ALEX CAI	22NOV2011

PRODUCT SPEC 108-2364
APPLICATION SPEC 114-13120
WEIGHT -

TE Connectivity

NAME SFP+ ENHANCED 1X6 CAGE ASSEMBLY, PRESS FIT, EXTERNAL EMI SPRINGS WITH HEATSINK

SIZE	CAGE CODE	DRAWING NO	RESTRICTED TO
A1	00779	C-2170192	-

Customer Drawing

SCALE	SHEET	OF	REV
4:1	4	5	A

THIS DRAWING IS UNPUBLISHED. RELEASED FOR PUBLICATION -
© COPYRIGHT copyright.dgkc- ALL RIGHTS RESERVED.

LOC	DIST
GP	00

REVISIONS

P	LTR	DESCRIPTION	DATE	DWN	APVD
	-	SEE SHEET 1	-	-	-

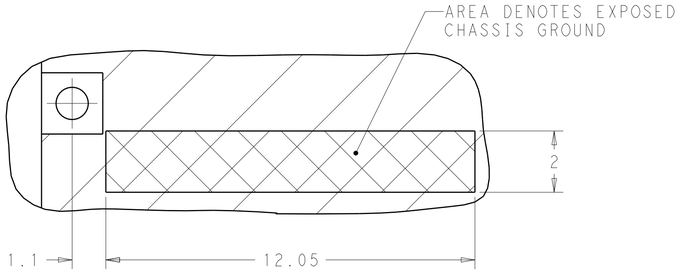

DETAIL B
6X INDIVIDUALLY
SCALE 10:1

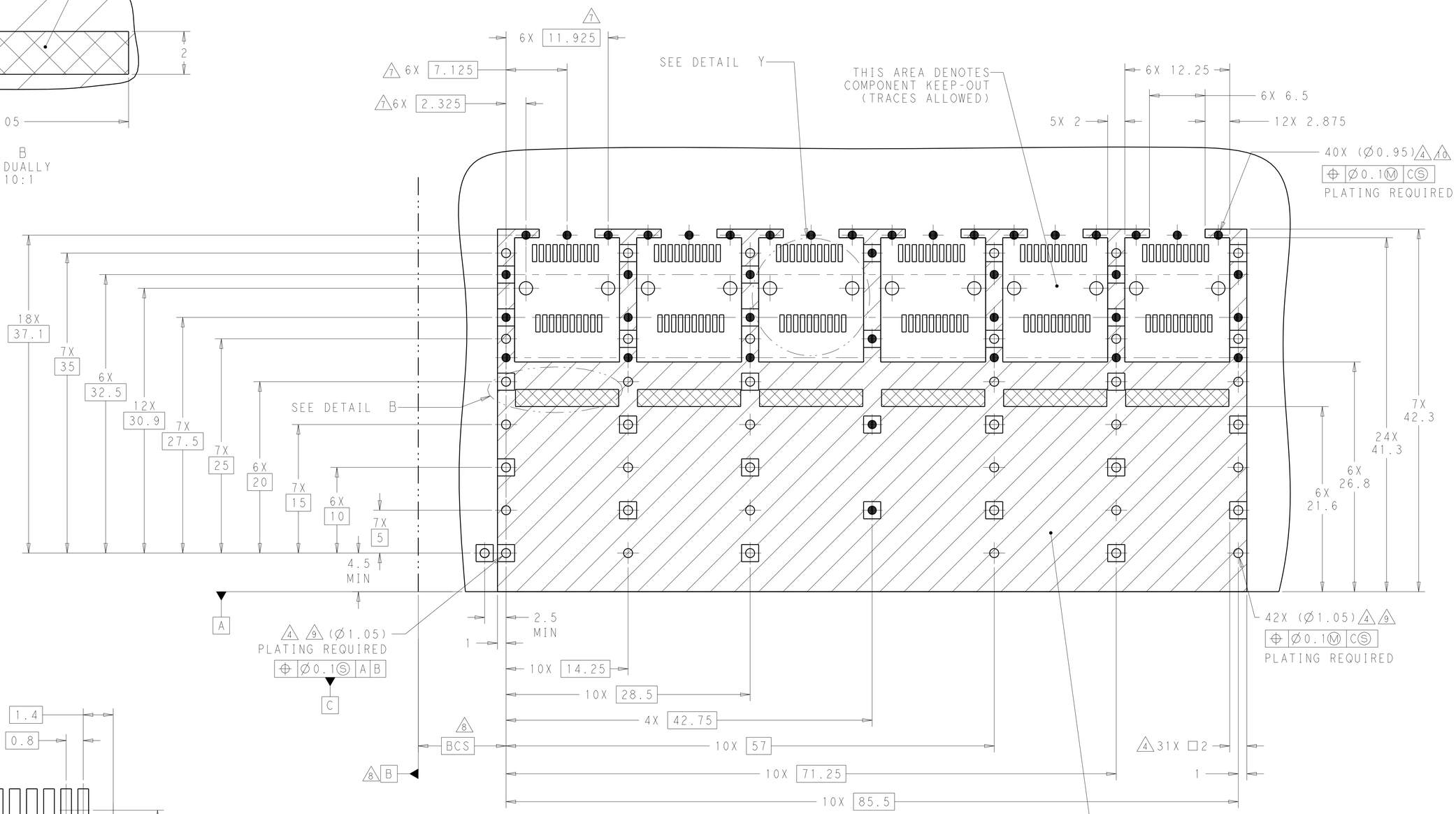

RECOMMENDED PCB CONFIGURATION
WITH KEEP-OUT AREAS
BELLY TO BELLY APPLICATIONS
SCALE 4:1 6

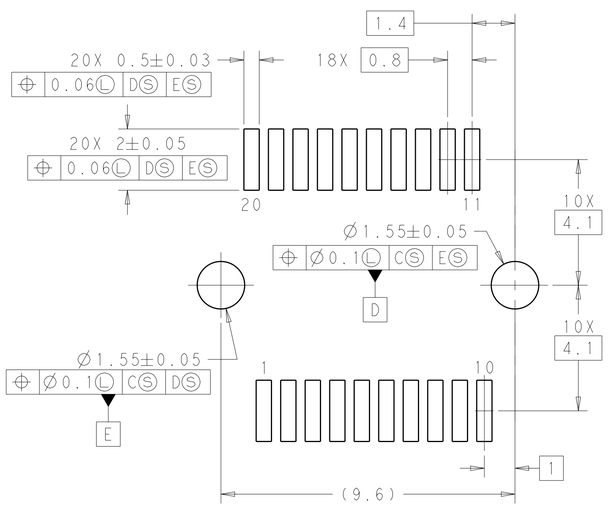

DETAIL Y
RECOMMENDED PT CONNECTOR LAYOUT
12X INDIVIDUALLY
SCALE 10:1

THIS DRAWING IS A CONTROLLED DOCUMENT.

DIMENSIONS: mm

TOLERANCES UNLESS OTHERWISE SPECIFIED:

0 PLC	±0.25
1 PLC	±0.20
2 PLC	±0.15
3 PLC	±0.1
4 PLC	±0.1
ANGLES	±1°

MATERIAL 1

FINISH

DWN	TIM XUE	22NOV2011
CHK	ALEX CAI	22NOV2011
APVD	ALEX CAI	22NOV2011

PRODUCT SPEC 108-2364

APPLICATION SPEC 114-13120

WEIGHT -

TE Connectivity

NAME SFP+ ENHANCED 1X6 CAGE ASSEMBLY, PRESS FIT, EXTERNAL EMI SPRINGS WITH HEATSINK

SIZE	CAGE CODE	DRAWING NO	RESTRICTED TO
A1	00779	C-2170192	-

Customer Drawing

SCALE	SHEET	OF	REV
4:1	5	5	A

4805 (3/11)

Компания «ЭлектроПласт» предлагает заключение долгосрочных отношений при поставках импортных электронных компонентов на взаимовыгодных условиях!

Наши преимущества:

- Оперативные поставки широкого спектра электронных компонентов отечественного и импортного производства напрямую от производителей и с крупнейших мировых складов;
- Поставка более 17-ти миллионов наименований электронных компонентов;
- Поставка сложных, дефицитных, либо снятых с производства позиций;
- Оперативные сроки поставки под заказ (от 5 рабочих дней);
- Экспресс доставка в любую точку России;
- Техническая поддержка проекта, помощь в подборе аналогов, поставка прототипов;
- Система менеджмента качества сертифицирована по Международному стандарту ISO 9001;
- Лицензия ФСБ на осуществление работ с использованием сведений, составляющих государственную тайну;
- Поставка специализированных компонентов (Xilinx, Altera, Analog Devices, Intersil, Interpoint, Microsemi, Aeroflex, Peregrine, Syfer, Eurofarad, Texas Instrument, Miteq, Cobham, E2V, MA-COM, Hittite, Mini-Circuits,General Dynamics и др.);

Помимо этого, одним из направлений компании «ЭлектроПласт» является направление «Источники питания». Мы предлагаем Вам помощь Конструкторского отдела:

- Подбор оптимального решения, техническое обоснование при выборе компонента;
- Подбор аналогов;
- Консультации по применению компонента;
- Поставка образцов и прототипов;
- Техническая поддержка проекта;
- Защита от снятия компонента с производства.

Как с нами связаться

Телефон: 8 (812) 309 58 32 (многоканальный)
Факс: 8 (812) 320-02-42
Электронная почта: org@eplast1.ru
Адрес: 198099, г. Санкт-Петербург, ул. Калинина, дом 2, корпус 4, литера А.