THIS DRAWING IS UNPUBLISHED. RELEASED FOR PUBLICATION 20
© COPYRIGHT 20 BY - ALL RIGHTS RESERVED.

| LOC | DIST |
|---|---|
| GP | 00 |

REVISIONS

| P | LTR | DESCRIPTION | DATE | DWN | APVD |
|---|---|---|---|---|---|
| | A | PRODUCTION RELEASE | 29FEB2016 | JW | SH |
| | A1 | REVISED PER ECR-18-013796 | 30AUG2018 | IT | SH |
| | A2 | REVISED PER ECR-18-016039 | 100CT2018 | IT | SH |

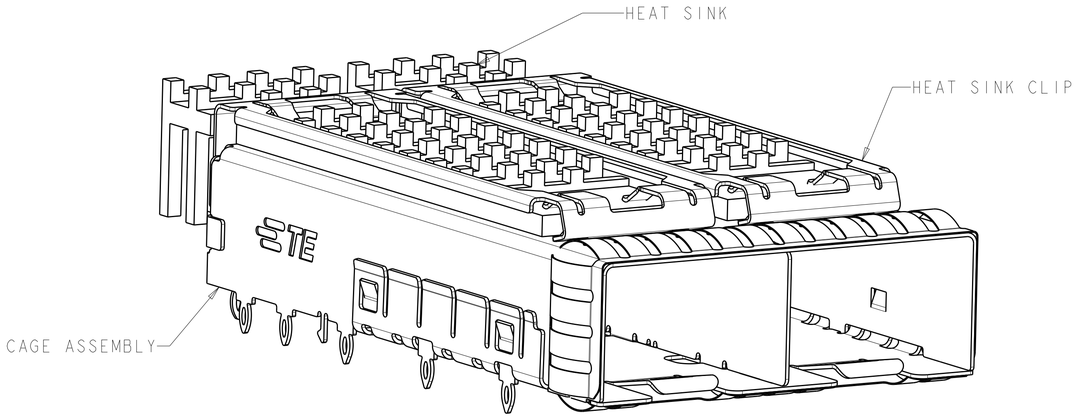


2170190-1
SCALE 5:1

1. MATERIAL:
   CAGE ASSEMBLY: 0.25mm THICK NICKEL SILVER ALLOY
   EMI SPRINGS: COPPER ALLOY
   HEAT SINK: ALUMINUM
   HEAT SINK CLIP: STAINLESS STEEL.
   INSULATOR: KAPTON

2. FINISH:
   2170190-1/-2/-4 HEAT SINK: HARD ANODIC COATING
   2170190-3 HEAT SINK: BLACK ANODIZE
   HEAT SINK CLIP: PASSIVATE.

3. DATUM AND BASIC DIMENSIONS ESTABLISHED BY CUSTOMER.

5. PADS AND VIAS CHASSIS GROUND.

5. MATES WITH SFP MSA COMPLIANT RECIEVERS.

6. INTERPRETATION OF DATUM REFERENCE FRAME IN ACCORDANCE WITH SECT 4.4.1.1 OR ASME Y14.5M-1994.

7. MINIMUM PC BOARD THICKNESS:
   SINGLE SIDED: 1.5mm
   DOUBLE SIDED: 2.25

8. HOLE PATTERN REPEATS FOR EACH PORT, SPACING BETWEEN PORTS IS 14.25mm.

9. REFERENCE APPLICATION SPEC. 114-13120, HOLE A, FOR RECOMMENDED DRILL HOLE DIAMETER AND PLATING THICKNESS.

10. REFERENCE APPLICATION SPEC. 114-13120, HOLE B, FOR RECOMMENDED DRILL HOLE DIAMETER AND PLATING THICKNESS.

11. CERTAIN MATING TRANCEIVERS MAY REQUIRE ADDITIONAL PCB THICKNESS THAT WOULD NEED TO BE DETERMINED BY THE CUSTOMER.

12. PRODUCT COMPLIES WITH SPECIFICATION SFF-8433 IMPROVED PLUGGABLE FORM FACTOR FOR SFP+ GANGED CAGES.

13. DIMENSION APPLIES PRIOR TO INSERTION OF SFP MODULE.

14. PRELIMINARY PART, NO RELEASED TO MASS PRODUCTION

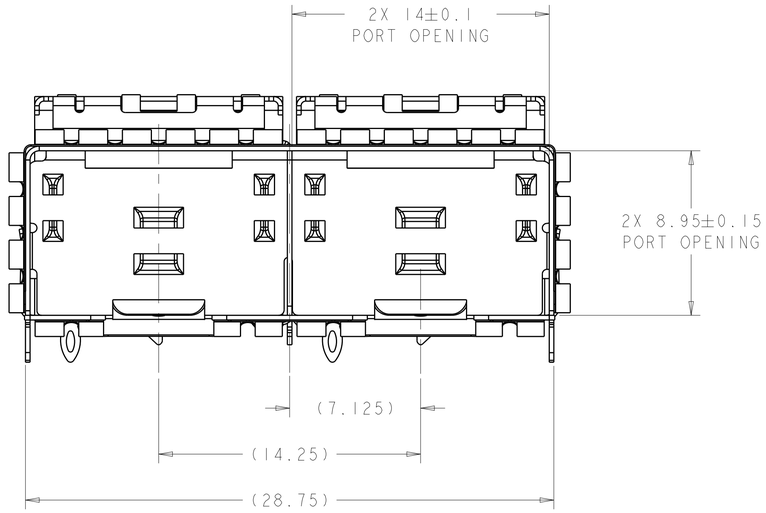


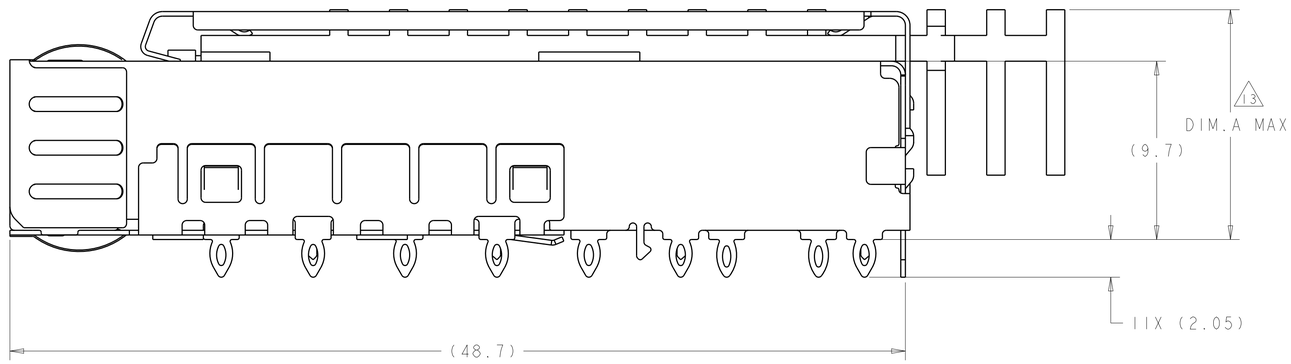


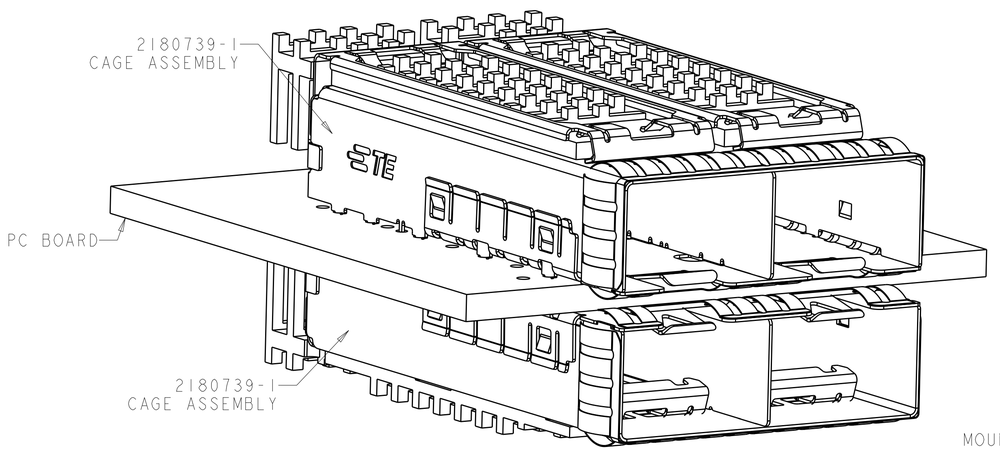


2170190-1
MOUNTED BELLY TO BELLY
SCALE 4:1

| | | |
|---|---|---|
| PIN TYPE | HEAT SINK W/ THE FRIST ROW PIN | 2170190-4 |
| FIN TYPE | HEAT SINK W/ THE FRIST ROW PIN | 2170190-3 |
| PIN TYPE | HEAT SINK W/ THE FIRST ROW PIN | 2170190-2 |
| PIN TYPE | HEAT SINK W/O THE FIRST ROW PIN | 2170190-1 |
| HEAT SINK | DESCRIPTION | PART NUMBER |

THIS DRAWING IS A CONTROLLED DOCUMENT.

DIMENSIONS: mm

TOLERANCES UNLESS OTHERWISE SPECIFIED:
0 PLC ±0.13
1 PLC ±0.1
2 PLC ±0.08
3 PLC ±.05
4 PLC ±.05
ANGLES ±1

MATERIAL 1
FINISH 2

DWN TIM XUE 21NOV2011
CHK ALEX CAI 21NOV2011
APVD ALEX CAI 21NOV2011
PRODUCT SPEC 108-2364
APPLICATION SPEC 114-13120
WEIGHT -

TE Connectivity

NAME SFP+ ENHANCED 1X2 CAGE ASSEMBLY, PRESS-FIT, EMI SPRINGS, HEAT SINK

SIZE A1 | CAGE CODE 00779 | DRAWING NO C-2170190 | RESTRICTED TO -

CUSTOMER DRAWING | SCALE 6:1 | SHEET 1 OF 5 | REV A2

4805 (3/11)

THIS DRAWING IS UNPUBLISHED. RELEASED FOR PUBLICATION 20
© COPYRIGHT 20 BY - ALL RIGHTS RESERVED.

| LOC | DIST |
|---|---|
| GP | 00 |

REVISIONS

| P | LTR | DESCRIPTION | DATE | DWN | APVD |
|---|---|---|---|---|---|
| | - | SEE SHEET 1 | - | - | - |

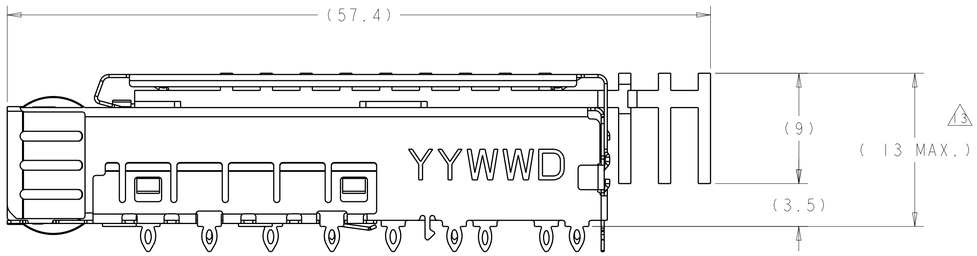


2170190-1 AS SHOWN
HEAT SINK W/O THE FIRST ROW PIN

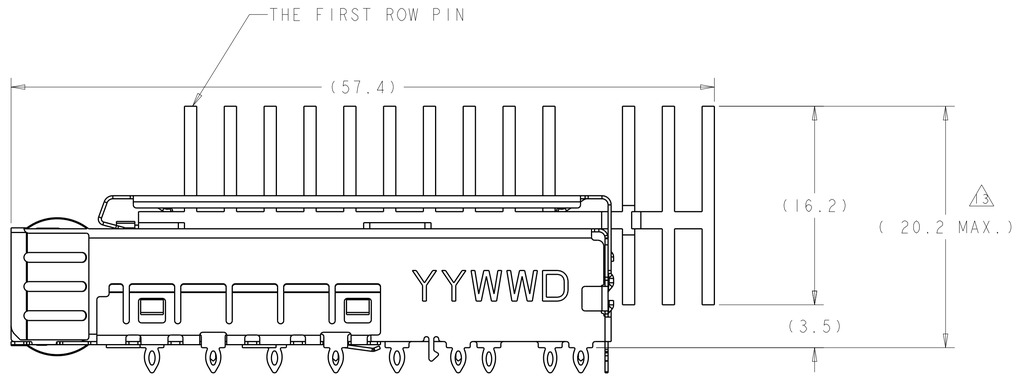


2170190-2 AS SHOWN

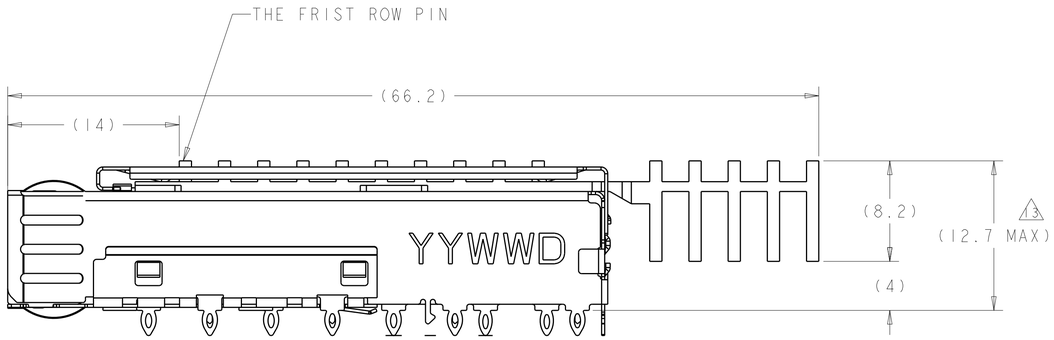


2170190-3 AS SHOWN

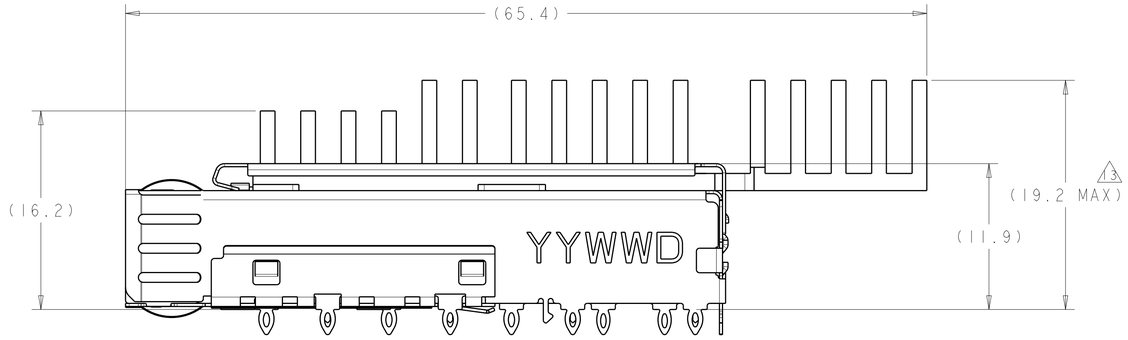


2170190-4 AS SHOWN
SCALE 4:1

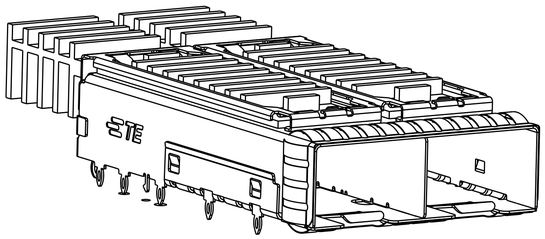

2170190-3 3D VIEW

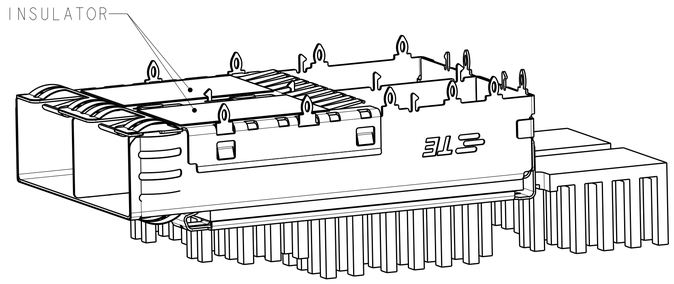


2170190-4 3D VIEW

THIS DRAWING IS A CONTROLLED DOCUMENT.

DIMENSIONS: mm

TOLERANCES UNLESS OTHERWISE SPECIFIED:
0 PLC ±0.13
1 PLC ±0.1
2 PLC ±0.08
3 PLC ±.05
4 PLC ±.05
ANGLES ±1

MATERIAL
FINISH

DWN TIM XUE 21NOV2011
CHK ALEX CAI 21NOV2011
APVD ALEX CAI 21NOV2011
PRODUCT SPEC 108-2364
APPLICATION SPEC 114-13120
WEIGHT -

TE Connectivity

NAME SFP+ ENHANCED 1X2 CAGE ASSEMBLY, PRESS-FIT, EMI SPRINGS, HEAT SINK

| SIZE | CAGE CODE | DRAWING NO | RESTRICTED TO |
|---|---|---|---|
| A1 | 00779 | C-2170190 | - |

CUSTOMER DRAWING | SCALE 6:1 | SHEET 2 OF 5 | REV A2

4805 (3/11)

THIS DRAWING IS UNPUBLISHED. RELEASED FOR PUBLICATION 20
© COPYRIGHT 20 BY - ALL RIGHTS RESERVED.

| LOC | DIST |
|---|---|
| GP | 00 |

REVISIONS

| P | LTR | DESCRIPTION | DATE | DWN | APVD |
|---|---|---|---|---|---|
| | - | SEE SHEET 1 | - | - | - |

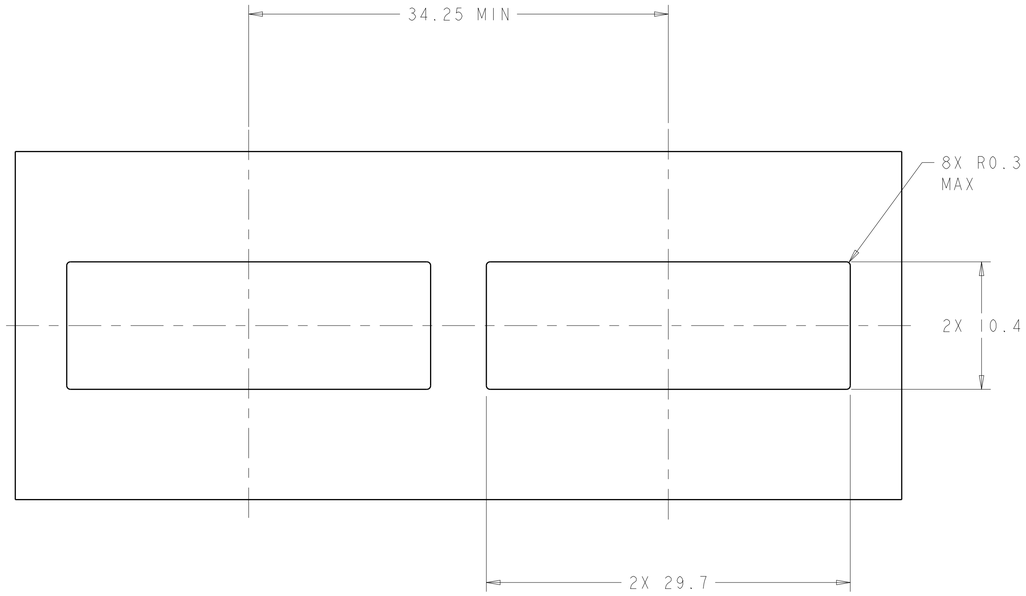


RECOMMENDED BEZEL CUT-OUT
SINGLE SIDED APPLICATIONS
SCALE 4:1

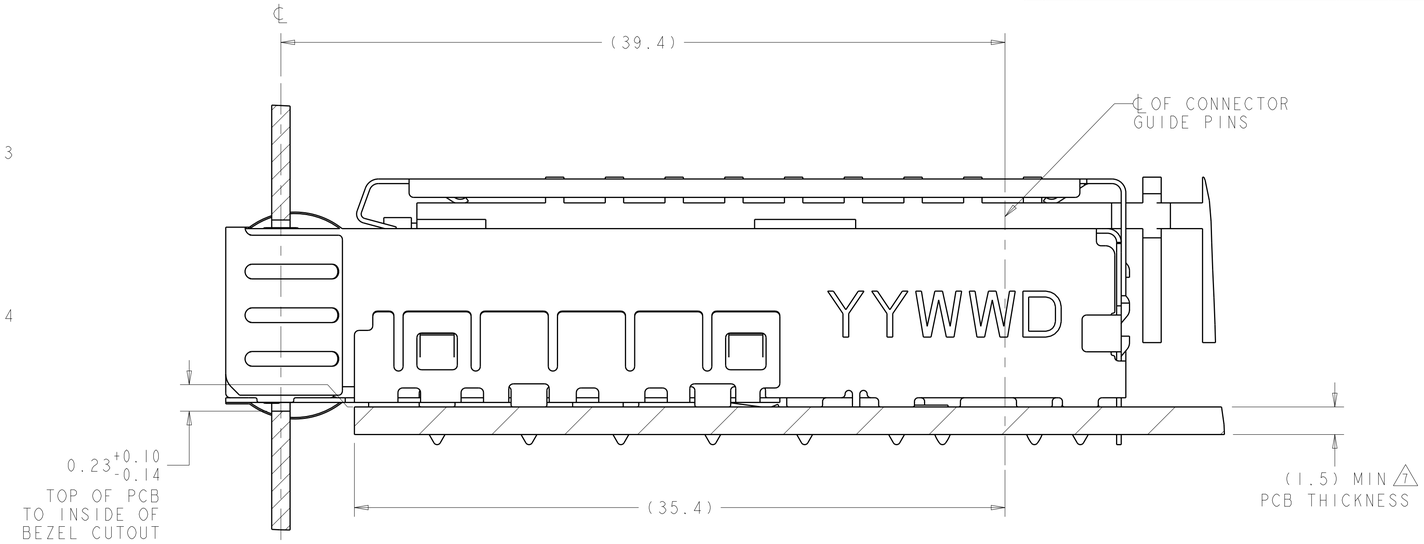


2170190-1
MOUNTED ON PC BOARD
SHOWN THRU RECOMMENDED BEZEL

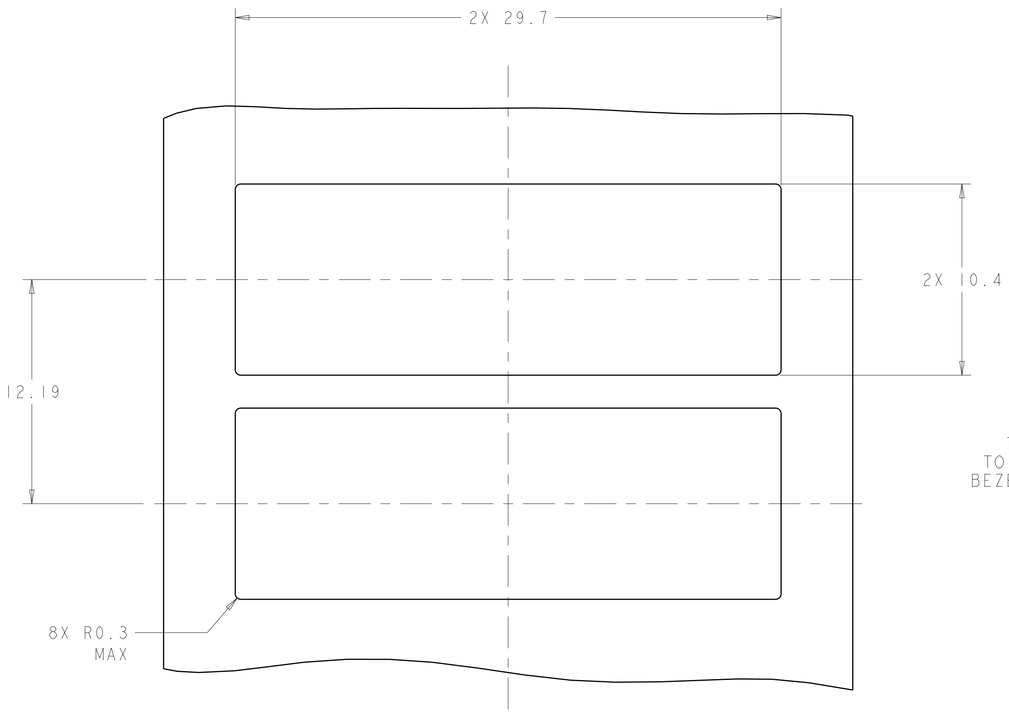


RECOMMENDED BEZEL CUT-OUT
BELLY TO BELLY APPLICATIONS

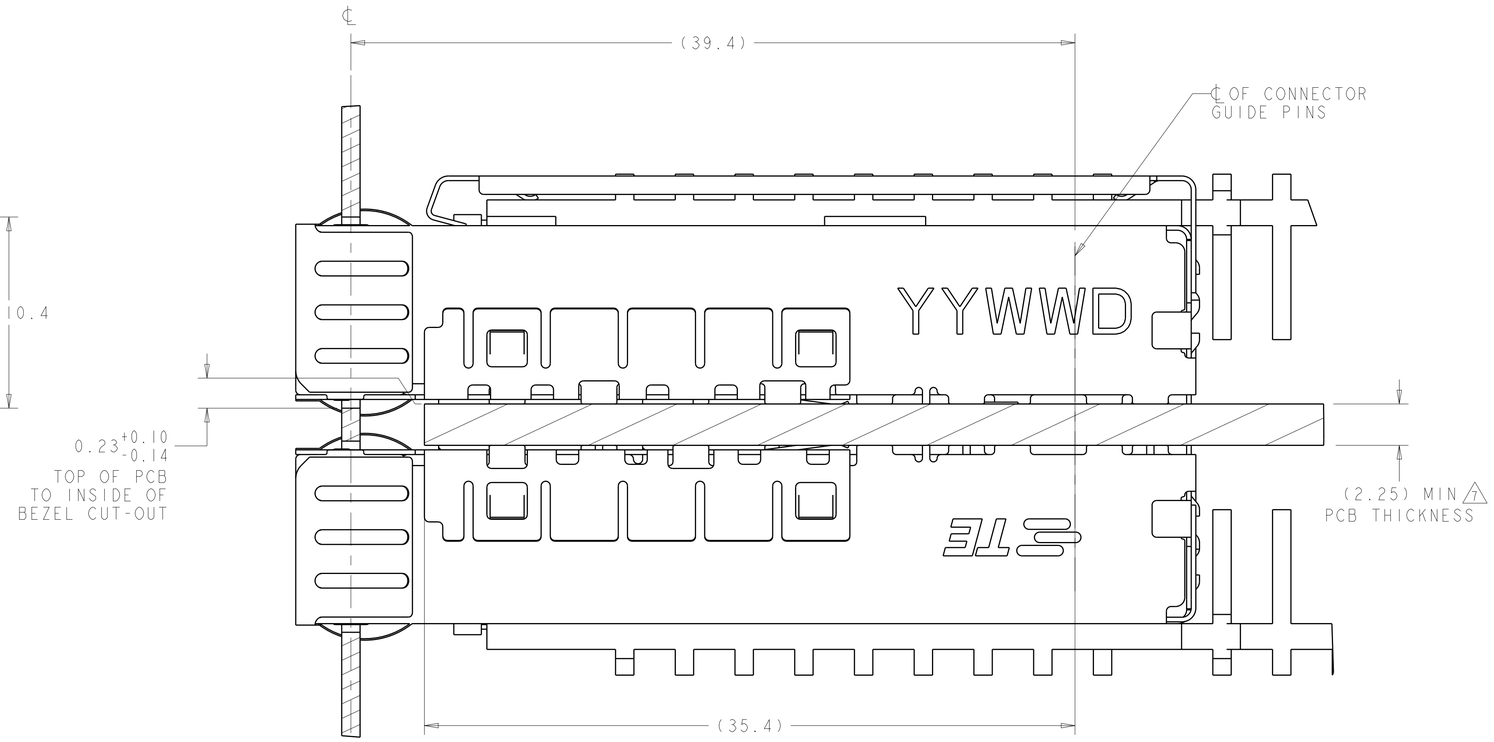


2170190-1
MOUNTED BELLY TO BELLY ON PC BOARD
SHOWN THRU RECOMMENDED BEZEL

THIS DRAWING IS A CONTROLLED DOCUMENT.

DIMENSIONS: mm

TOLERANCES UNLESS OTHERWISE SPECIFIED:
0 PLC ±0.13
1 PLC ±0.1
2 PLC ±0.08
3 PLC ±.05
4 PLC ±.05
ANGLES ±1

MATERIAL
FINISH

| | | |
|---|---|---|
| DWN | TIM XUE | 21NOV2011 |
| CHK | ALEX CAI | 21NOV2011 |
| APVD | ALEX CAI | 21NOV2011 |

PRODUCT SPEC 108-2364
APPLICATION SPEC 114-13120
WEIGHT -

TE Connectivity

NAME SFP+ ENHANCED 1X2 CAGE ASSEMBLY, PRESS-FIT, EMI SPRINGS, HEAT SINK

| SIZE | CAGE CODE | DRAWING NO | RESTRICTED TO |
|---|---|---|---|
| A1 | 00779 | C-2170190 | - |

CUSTOMER DRAWING | SCALE 6:1 | SHEET 3 OF 5 | REV A2

4805 (3/11)

THIS DRAWING IS UNPUBLISHED. RELEASED FOR PUBLICATION 20
© COPYRIGHT 20 BY - ALL RIGHTS RESERVED.

| LOC | DIST |
|---|---|
| GP | 00 |

REVISIONS

| P | LTR | DESCRIPTION | DATE | DWN | APVD |
|---|---|---|---|---|---|
| | - | SEE SHEET 1 | - | - | - |

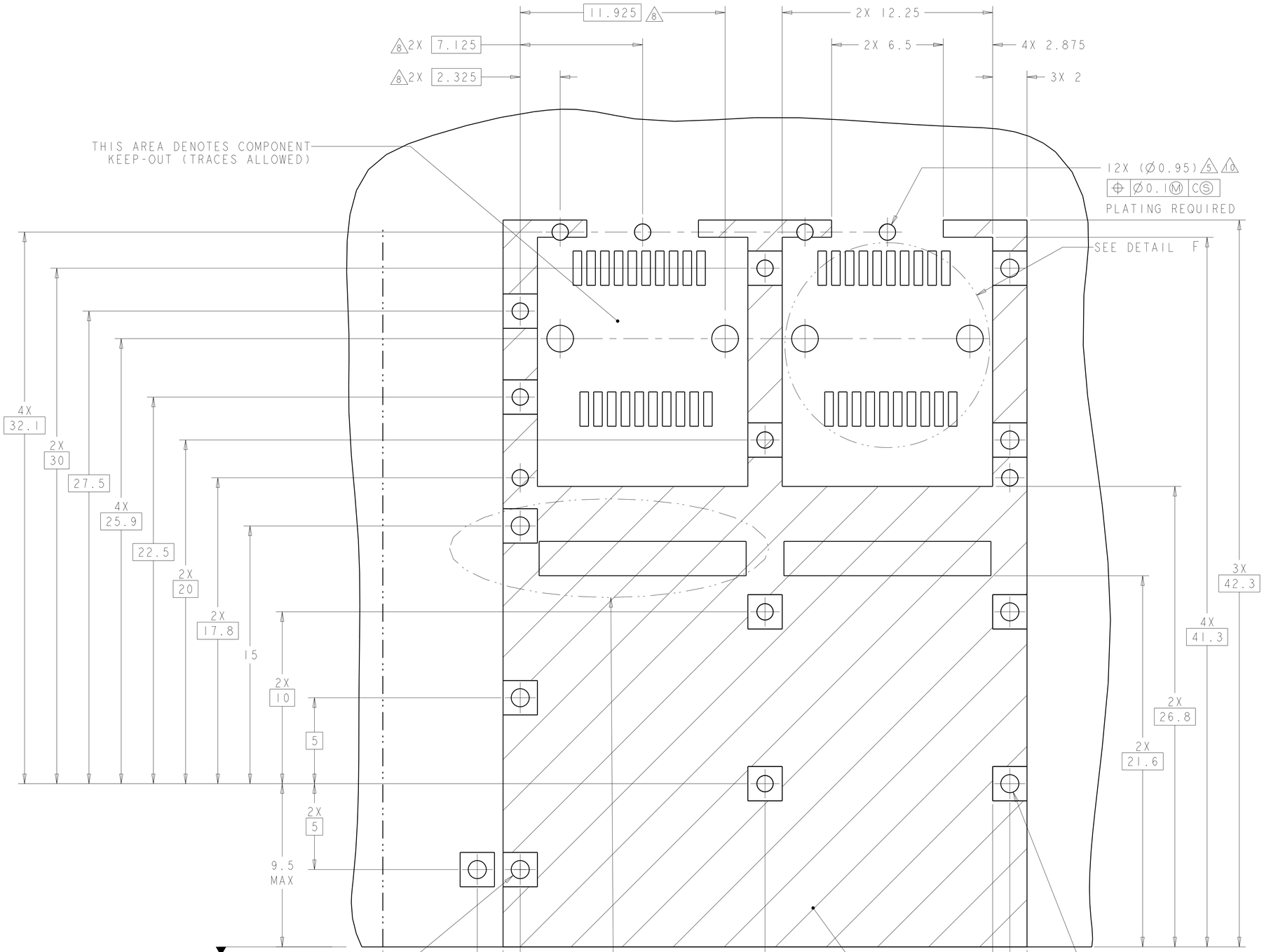


RECOMMENDED PCB CONFIGURATION
WITH KEEP-OUT AREAS
SINGLE SIDED APPLICATIONS
SCALE 8:1 [7]

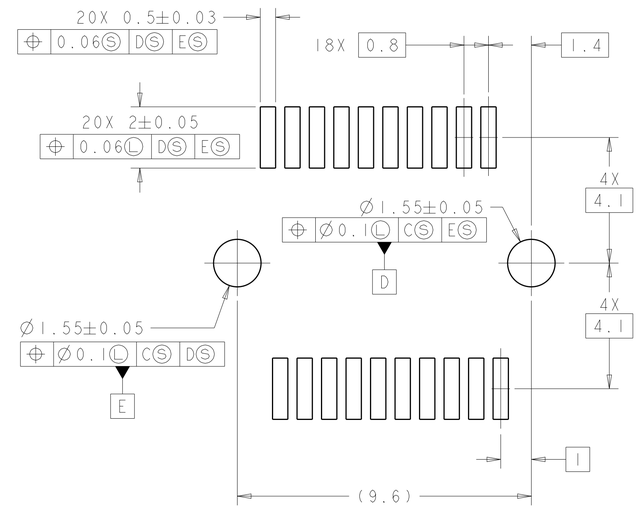


DETAIL F
SCALE 10:1

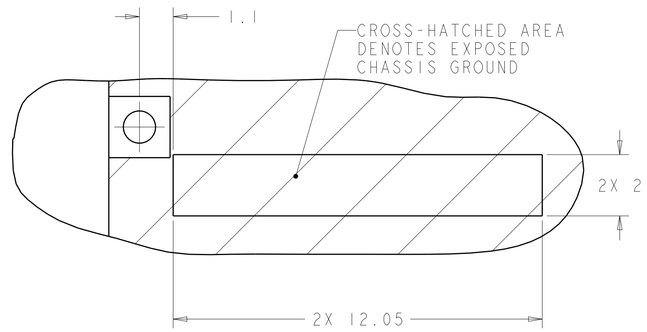


DETAIL G
SCALE 10:1

| | | | |
|---|---|---|---|
| THIS DRAWING IS A CONTROLLED DOCUMENT. | DWN TIM XUE 21NOV2011 | TE Connectivity | |
| DIMENSIONS: mm | CHK ALEX CAI 21NOV2011 | NAME SFP+ ENHANCED 1X2 CAGE ASSEMBLY, PRESS-FIT, EMI SPRINGS, HEAT SINK | |
| TOLERANCES UNLESS OTHERWISE SPECIFIED: 0 PLC ±0.13; 1 PLACE ±0.1; 2 PLC ±0.08; 3 PLC ±0.05; 4 PLC ±0.05; ANGLES ±1 | APVD ALEX CAI 21NOV2011 | | |
| | PRODUCT SPEC 108-2364 | | |
| | APPLICATION SPEC 114-13120 | SIZE A1 / CAGE CODE 00779 / DRAWING NO C-2170190 | RESTRICTED TO - |
| MATERIAL | WEIGHT - | | |
| FINISH | CUSTOMER DRAWING | SCALE 6:1 / SHEET 4 OF 5 | REV A2 |

THIS DRAWING IS UNPUBLISHED. RELEASED FOR PUBLICATION 20
© COPYRIGHT 20 BY - ALL RIGHTS RESERVED.

| LOC | DIST |
|---|---|
| GP | 00 |

REVISIONS

| P | LTR | DESCRIPTION | DATE | DWN | APVD |
|---|---|---|---|---|---|
| | - | SEE SHEET 1 | - | - | - |

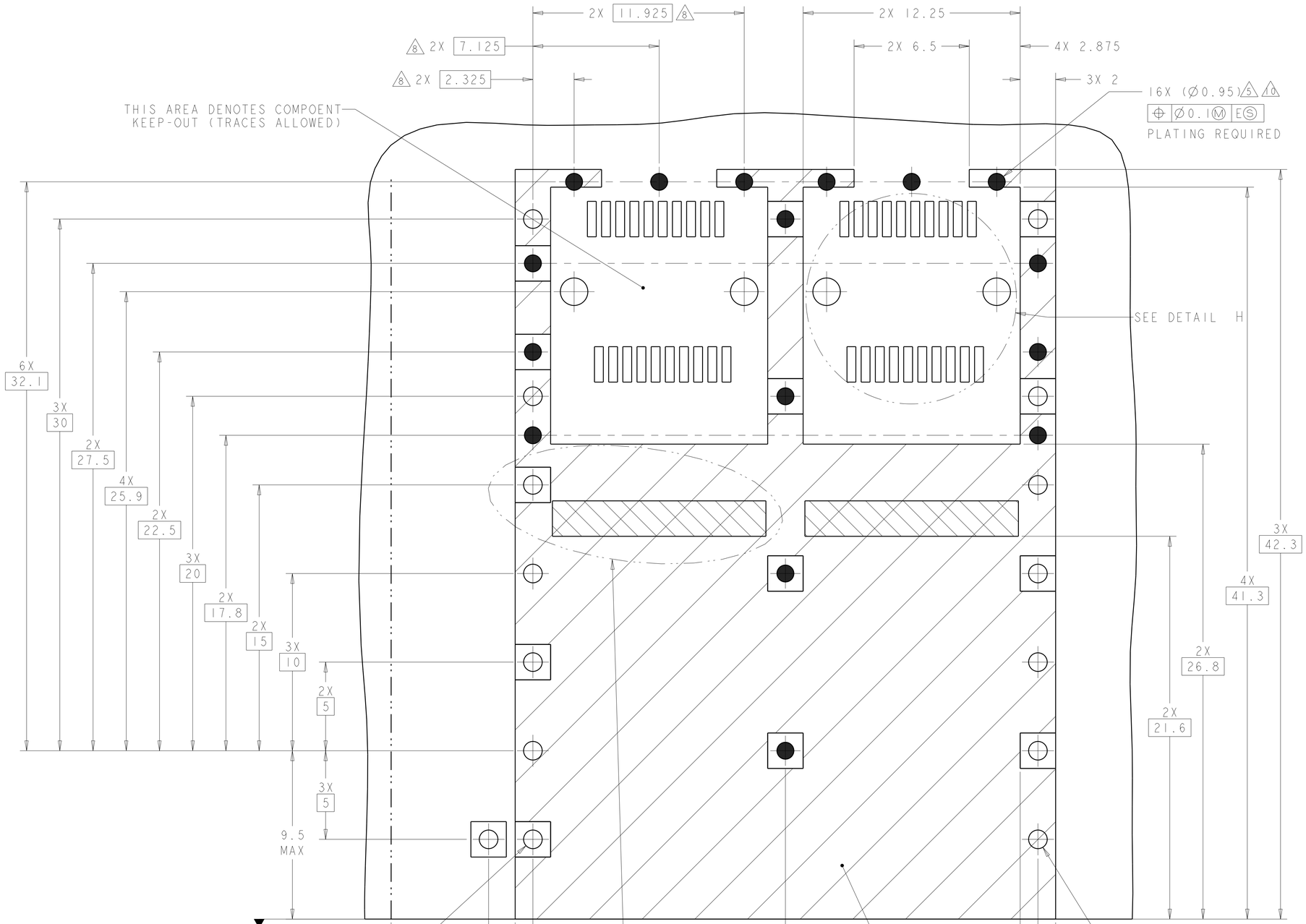


RECOMMENDED PCB CONFIGURATION
WITH KEEP-OUT AREAS
BELLY TO BELLY APPLICATIONS
SCALE 8:1 7

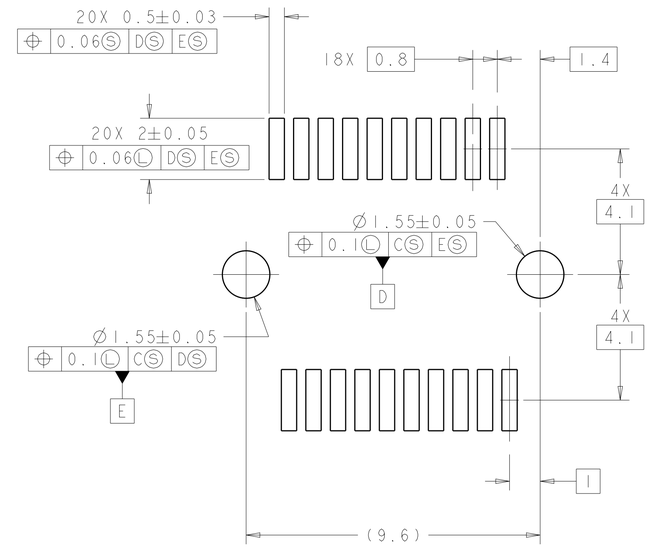


DETAIL H
SCALE 10:1

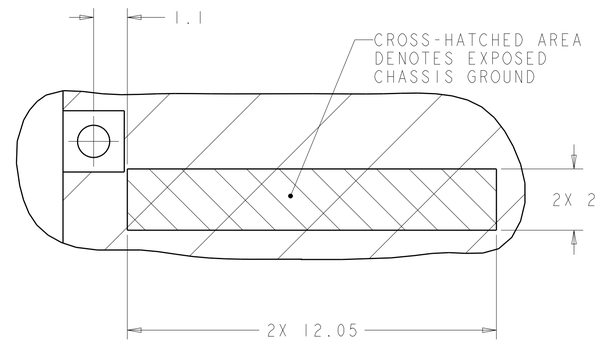


DETAIL J
SCALE 10:1

THIS DRAWING IS A CONTROLLED DOCUMENT.

DIMENSIONS: mm

TOLERANCES UNLESS OTHERWISE SPECIFIED:
0 PLC ±0.13
1 PLC ±0.1
2 PLC ±0.08
3 PLC ±0.05
4 PLC ±0.05
ANGLES ±1

MATERIAL
FINISH

DWN TIM XUE 21NOV2011
CHK ALEX CAI 21NOV2011
APVD ALEX CAI 21NOV2011
PRODUCT SPEC 108-2364
APPLICATION SPEC 114-13120
WEIGHT -

TE Connectivity

NAME SFP+ ENHANCED 1X2 CAGE ASSEMBLY, PRESS-FIT, EMI SPRINGS, HEAT SINK

| SIZE | CAGE CODE | DRAWING NO | RESTRICTED TO |
|---|---|---|---|
| A1 | 00779 | C-2170190 | - |

CUSTOMER DRAWING | SCALE 6:1 | SHEET 5 OF 5 | REV A2

4805 (3/11)

Компания «ЭлектроПласт» предлагает заключение долгосрочных отношений при поставках импортных электронных компонентов на взаимовыгодных условиях!

Наши преимущества:

- Оперативные поставки широкого спектра электронных компонентов отечественного и импортного производства напрямую от производителей и с крупнейших мировых складов;
- Поставка более 17-ти миллионов наименований электронных компонентов;
- Поставка сложных, дефицитных, либо снятых с производства позиций;
- Оперативные сроки поставки под заказ (от 5 рабочих дней);
- Экспресс доставка в любую точку России;
- Техническая поддержка проекта, помощь в подборе аналогов, поставка прототипов;
- Система менеджмента качества сертифицирована по Международному стандарту ISO 9001;
- Лицензия ФСБ на осуществление работ с использованием сведений, составляющих государственную тайну;
- Поставка специализированных компонентов (Xilinx, Altera, Analog Devices, Intersil, Interpoint, Microsemi, Aeroflex, Peregrine, Syfer, Eurofarad, Texas Instrument, Miteq, Cobham, E2V, MA-COM, Hittite, Mini-Circuits,General Dynamics и др.);

Помимо этого, одним из направлений компании «ЭлектроПласт» является направление «Источники питания». Мы предлагаем Вам помощь Конструкторского отдела:

- Подбор оптимального решения, техническое обоснование при выборе компонента;
- Подбор аналогов;
- Консультации по применению компонента;
- Поставка образцов и прототипов;
- Техническая поддержка проекта;
- Защита от снятия компонента с производства.

**Как с нами связаться**

**Телефон:** 8 (812) 309 58 32 (многоканальный)
**Факс:** 8 (812) 320-02-42
**Электронная почта:** org@eplast1.ru
**Адрес:** 198099, г. Санкт-Петербург, ул. Калинина, дом 2, корпус 4, литера А.