THIS DRAWING IS UNPUBLISHED. RELEASED FOR PUBLICATION - ,- .
© COPYRIGHT - By - ALL RIGHTS RESERVED.

LOC	DIST
—	—

REVISIONS

P	LTR	DESCRIPTION	DATE	DWN	APVD
	F	REVISED PER ECO-15-005911	20MAY15	KG	DM

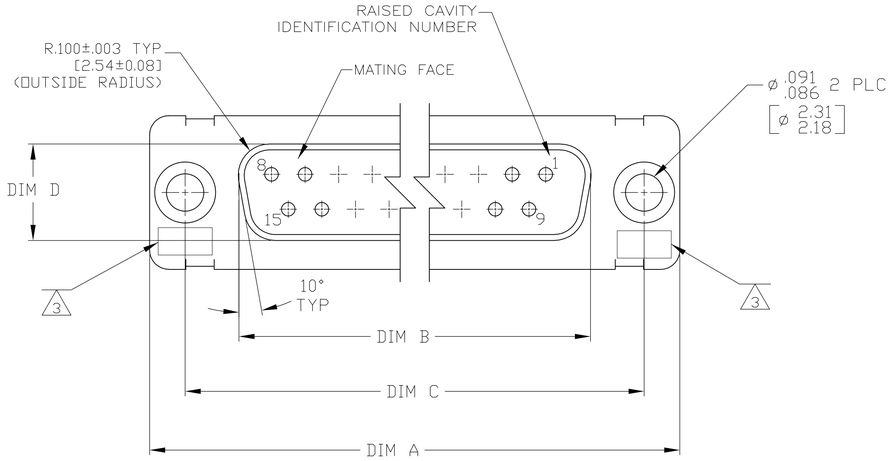

1. THE CONNECTOR DESCRIBED IN THIS DOCUMENT WILL MATE WITH ANY PLUG CONNECTOR WITH THE SAME INSERT ARRANGEMENT.

2. MARKED WITH .047-.062 [1.19-1.57] HIGH CHARACTERS. FAR SIDE REFERS TO THE WIDE SIDE OF THE KEYSTONE. NEAR SIDE REFERS TO THE NARROW SIDE OF THE KEYSTONE. WHEN SPACE IS LIMITED MARKING CAN BE SPLIT BETWEEN FRONT AND REAR SHELL.

3. UL/CSA DESIGNATION STAMPED IN THIS AREA.

4. CONNECTOR ASSEMBLY WITHOUT CONTACTS, MFG'S P/N 205090-1. MUST BE ORDERED SEPARATELY.

5. CONNECTOR ASSEMBLY SUPPLIED WITH CONTACTS, MFG'S P/N 205090-1. PACKAGED IN A SEPARATE CONTAINER. QTY = NO. OF POSN. (SEE TABLE).

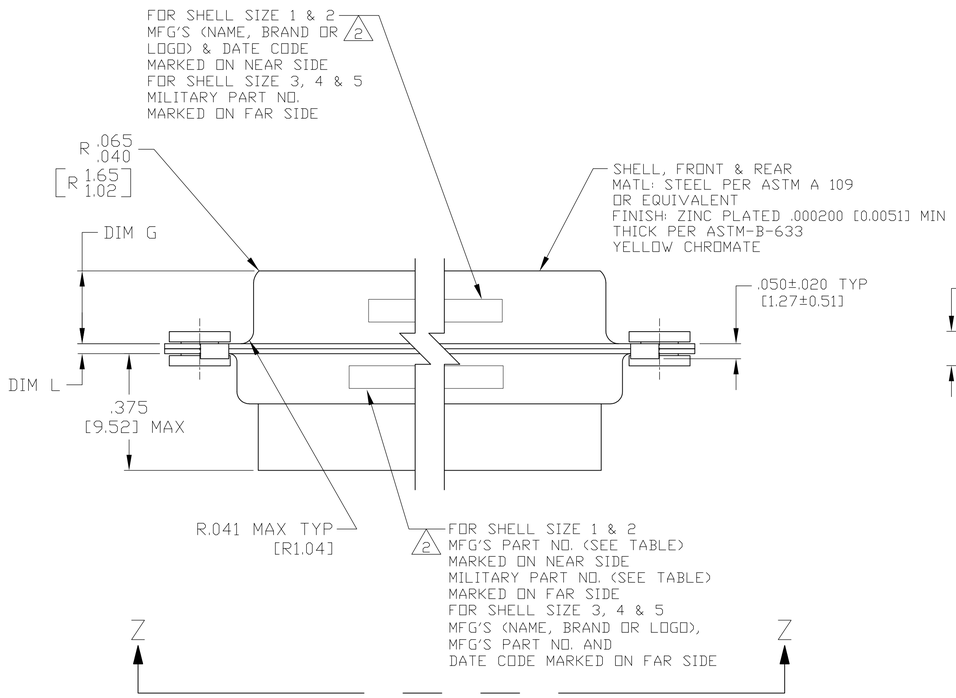

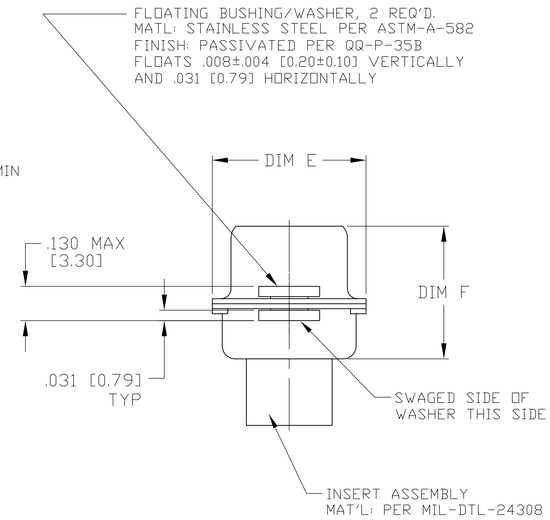

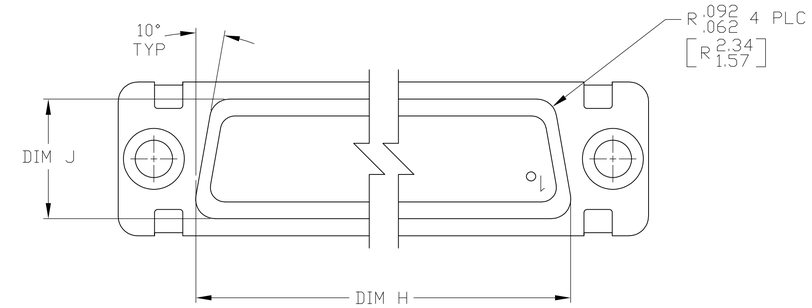

VIEW Z-Z

5. SIZE 20 SOCKET CONTACT
BODY MATERIAL: COPPER ALLOY PER MIL-C-39029 & MIL-DTL-24308.
PLATING: GOLD PER ASTM-B-488 (TYPE III) OVER NICKEL PER AMS-QQ-N-290.
HOOD MAT'L: STAINLESS STEEL
FINISH: PASSIVATED

REMARKS	MILITARY P/N ON PACKAGE	MILITARY P/N ON CONNECTOR 2	MARKED MFG'S PART NUMBER 2	L	J	H	G	F	E	D	C	B	A	INSERT ARRANGEMENT	NO OF POS	SHELL SIZE	PART NUMBER
5	M24308/2-27Z	M24308/2-27Z	1-1757822-0	.049 [1.24] .029 [0.74]	.544 [13.82] .524 [13.31]	2.188 [55.58] 2.168 [55.07]	.248 [6.30] .238 [6.05]	.439 [11.15] .419 [10.64]	.620 [15.75] .590 [14.99]	.428 [10.87] .418 [10.62]	2.411 [61.24] 2.401 [60.99]	2.069 [52.55] 2.059 [52.30]	2.650 [67.31] 2.620 [66.55]	MS18277-1	50	5	1-1757822-0
5	M24308/2-26Z	M24308/2-26Z	1757822-9	.049 [1.24] .029 [0.74]	.432 [10.97] .412 [10.46]	2.282 [57.96] 2.262 [57.45]	.248 [6.30] .238 [6.05]	.439 [11.15] .419 [10.64]	.509 [12.93] .479 [12.17]	.316 [8.03] .306 [7.77]	2.505 [63.63] 2.495 [63.37]	2.164 [54.97] 2.154 [54.71]	2.744 [69.70] 2.714 [68.94]	MS18276-1	37	4	1757822-9
5	M24308/2-25Z	M24308/2-25Z	1757822-8	.049 [1.24] .029 [0.74]	.432 [10.97] .412 [10.46]	1.635 [41.53] 1.615 [41.02]	.248 [6.30] .238 [6.05]	.439 [11.15] .419 [10.64]	.509 [12.93] .479 [12.17]	.316 [8.03] .306 [7.77]	1.857 [47.17] 1.847 [46.91]	1.516 [38.51] 1.506 [38.25]	2.103 [53.42] 2.073 [52.65]	MS18275-1	25	3	1757822-8
5	M24308/2-24Z	M24308/2-24Z	1757822-7	.040 [1.02] .020 [0.51]	.432 [10.97] .412 [10.46]	1.093 [27.76] 1.073 [27.25]	.248 [6.30] .238 [6.05]	.439 [11.15] .419 [10.64]	.509 [12.93] .479 [12.17]	.316 [8.03] .306 [7.77]	1.317 [33.45] 1.307 [33.20]	.976 [24.79] .966 [24.54]	1.556 [39.52] 1.526 [38.76]	MS18274-1	15	2	1757822-7
5	M24308/2-23Z	M24308/2-23Z	1757822-6	.040 [1.02] .020 [0.51]	.432 [10.97] .412 [10.46]	.769 [19.53] .749 [19.02]	.248 [6.30] .238 [6.05]	.439 [11.15] .419 [10.64]	.509 [12.93] .479 [12.17]	.316 [8.03] .306 [7.77]	.989 [25.12] .979 [24.87]	.648 [16.46] .638 [16.21]	1.228 [31.19] 1.198 [30.43]	MS18273-1	9	1	1757822-6
4	M24308/2-296Z	M24308/2-27Z	1-1757822-0	.049 [1.24] .029 [0.74]	.544 [13.82] .524 [13.31]	2.188 [55.58] 2.168 [55.07]	.248 [6.30] .238 [6.05]	.439 [11.15] .419 [10.64]	.620 [15.75] .590 [14.99]	.428 [10.87] .418 [10.62]	2.411 [61.24] 2.401 [60.99]	2.069 [52.55] 2.059 [52.30]	2.650 [67.31] 2.620 [66.55]	MS18277-1	50	5	1757822-5
4	M24308/2-295Z	M24308/2-26Z	1757822-9	.049 [1.24] .029 [0.74]	.432 [10.97] .412 [10.46]	2.282 [57.96] 2.262 [57.45]	.248 [6.30] .238 [6.05]	.439 [11.15] .419 [10.64]	.509 [12.93] .479 [12.17]	.316 [8.03] .306 [7.77]	2.505 [63.63] 2.495 [63.37]	2.164 [54.97] 2.154 [54.71]	2.744 [69.70] 2.714 [68.94]	MS18276-1	37	4	1757822-4
4	M24308/2-294Z	M24308/2-25Z	1757822-8	.049 [1.24] .029 [0.74]	.432 [10.97] .412 [10.46]	1.635 [41.53] 1.615 [41.02]	.248 [6.30] .238 [6.05]	.439 [11.15] .419 [10.64]	.509 [12.93] .479 [12.17]	.316 [8.03] .306 [7.77]	1.857 [47.17] 1.847 [46.91]	1.516 [38.51] 1.506 [38.25]	2.103 [53.42] 2.073 [52.65]	MS18275-1	25	3	1757822-3
4	M24308/2-293Z	M24308/2-24Z	1757822-7	.040 [1.02] .020 [0.51]	.432 [10.97] .412 [10.46]	1.093 [27.76] 1.073 [27.25]	.248 [6.30] .238 [6.05]	.439 [11.15] .419 [10.64]	.509 [12.93] .479 [12.17]	.316 [8.03] .306 [7.77]	1.317 [33.45] 1.307 [33.20]	.976 [24.79] .966 [24.54]	1.556 [39.52] 1.526 [38.76]	MS18274-1	15	2	1757822-2
4	M24308/2-292Z	M24308/2-23Z	1757822-6	.040 [1.02] .020 [0.51]	.432 [10.97] .412 [10.46]	.769 [19.53] .749 [19.02]	.248 [6.30] .238 [6.05]	.439 [11.15] .419 [10.64]	.509 [12.93] .479 [12.17]	.316 [8.03] .306 [7.77]	.989 [25.12] .979 [24.87]	.648 [16.46] .638 [16.21]	1.228 [31.19] 1.198 [30.43]	MS18273-1	9	1	1757822-1

THIS DRAWING IS A CONTROLLED DOCUMENT.

DIMENSIONS: INCHES

TOLERANCES UNLESS OTHERWISE SPECIFIED:
0 PLC ± –
1 PLC ± –
2 PLC ± –
3 PLC ± .005 [0.13]
4 PLC ± –
ANGLES ± 1°

MATERIAL: SEE CALLOUTS
FINISH: SEE CALLOUTS

DWN	C.C.THOMAS	5-24-05
CHK	D.MILLER	5-27-05
APVD	D.MILLER	5-27-05
PRODUCT SPEC	—	
APPLICATION SPEC	—	
WEIGHT	—	

TE Connectivity

NAME: AMPLIMITE RECEPTACLE ASSY,SIZE 1 THRU 5 SERIES 109 WITH FLOAT BUSHINGS AND ZINC PLATED SHELLS

SIZE	CAGE CODE	DRAWING NO	RESTRICTED TO
A1	00779	C-1757822	—

CUSTOMER DRAWING | SCALE 4:1 | SHEET 1 OF 1 | REV F

4805 (3/11)

Компания «ЭлектроПласт» предлагает заключение долгосрочных отношений при поставках импортных электронных компонентов на взаимовыгодных условиях!

Наши преимущества:

- Оперативные поставки широкого спектра электронных компонентов отечественного и импортного производства напрямую от производителей и с крупнейших мировых складов;
- Поставка более 17-ти миллионов наименований электронных компонентов;
- Поставка сложных, дефицитных, либо снятых с производства позиций;
- Оперативные сроки поставки под заказ (от 5 рабочих дней);
- Экспресс доставка в любую точку России;
- Техническая поддержка проекта, помощь в подборе аналогов, поставка прототипов;
- Система менеджмента качества сертифицирована по Международному стандарту ISO 9001;
- Лицензия ФСБ на осуществление работ с использованием сведений, составляющих государственную тайну;
- Поставка специализированных компонентов (Xilinx, Altera, Analog Devices, Intersil, Interpoint, Microsemi, Aeroflex, Peregrine, Syfer, Eurofarad, Texas Instrument, Miteq, Cobham, E2V, MA-COM, Hittite, Mini-Circuits,General Dynamics и др.);

Помимо этого, одним из направлений компании «ЭлектроПласт» является направление «Источники питания». Мы предлагаем Вам помощь Конструкторского отдела:

- Подбор оптимального решения, техническое обоснование при выборе компонента;
- Подбор аналогов;
- Консультации по применению компонента;
- Поставка образцов и прототипов;
- Техническая поддержка проекта;
- Защита от снятия компонента с производства.

Как с нами связаться

Телефон: 8 (812) 309 58 32 (многоканальный)
Факс: 8 (812) 320-02-42
Электронная почта: org@eplast1.ru
Адрес: 198099, г. Санкт-Петербург, ул. Калинина, дом 2, корпус 4, литера А.