CS8363

3.3 V Dual Micropower Regulator with $\overline{\text{ENABLE}}$ and $\overline{\text{RESET}}$

The CS8363 is a precision Micropower dual voltage regulator with $\overline{\text{ENABLE}}$ and $\overline{\text{RESET}}$.

The 3.3 V standby output is accurate within −2%, +2.4% while supplying loads of 100 mA. Quiescent current is low, typically 140 μA with a 300 μA load. The active $\overline{\text{RESET}}$ output monitors the 3.3 V standby output and is low during power−up and regulator dropout conditions. The $\overline{\text{RESET}}$ circuit includes hysteresis and is guaranteed to operate correctly with 1.0 V on the standby output.

The second output tracks the 3.3 V standby output through an external adjust lead, and can supply loads of 250 mA. The logic level lead $\overline{\text{ENABLE}}$ is used to control this tracking regulator output.

Both outputs are protected against overvoltage, short circuit, reverse battery and overtemperature conditions. The robustness and low quiescent current of the CS8363 makes it not only well suited for automotive microprocessor applications, but for any battery powered microprocessor applications.

Features

- 2 Regulated Outputs
  - Standby Output 3.3 V −2%, +2.4%; 100 mA
  - Adjustable Tracking Output; 250 mA
- Operation down to V_{IN} = 4.5 V
- RESET for V_{STBY}
- ENABLE for V_{TRK}
- Low Quiescent Current
- Protection Features
  - Independent Thermal Shutdown
  - Short Circuit
  - 60 V Load Dump
  - Reverse Battery

ON Semiconductor®

http://onsemi.com

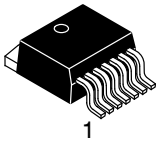

D²PAK−7
DPS SUFFIX
CASE 936AB

Pin
1. V_{STBY}
2. V_{IN}
3. V_{TRK}
4. GND
5. Adj
6. $\overline{\text{ENABLE}}$
7. $\overline{\text{RESET}}$

MARKING DIAGRAM

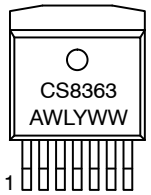

A = Assembly Location
WL = Wafer Lot
Y = Year
WW = Work Week

ORDERING INFORMATION*

Device	Package	Shipping†
CS8363YDPS7	D²PAK−7	50 Units/Rail
CS8363YDPSR7	D²PAK−7	750 Tape & Reel

†For information on tape and reel specifications, including part orientation and tape sizes, please refer to our Tape and Reel Packaging Specifications Brochure, BRD8011/D.

© Semiconductor Components Industries, LLC, 2009

October, 2009 − Rev. 12

Publication Order Number:
CS8363/D

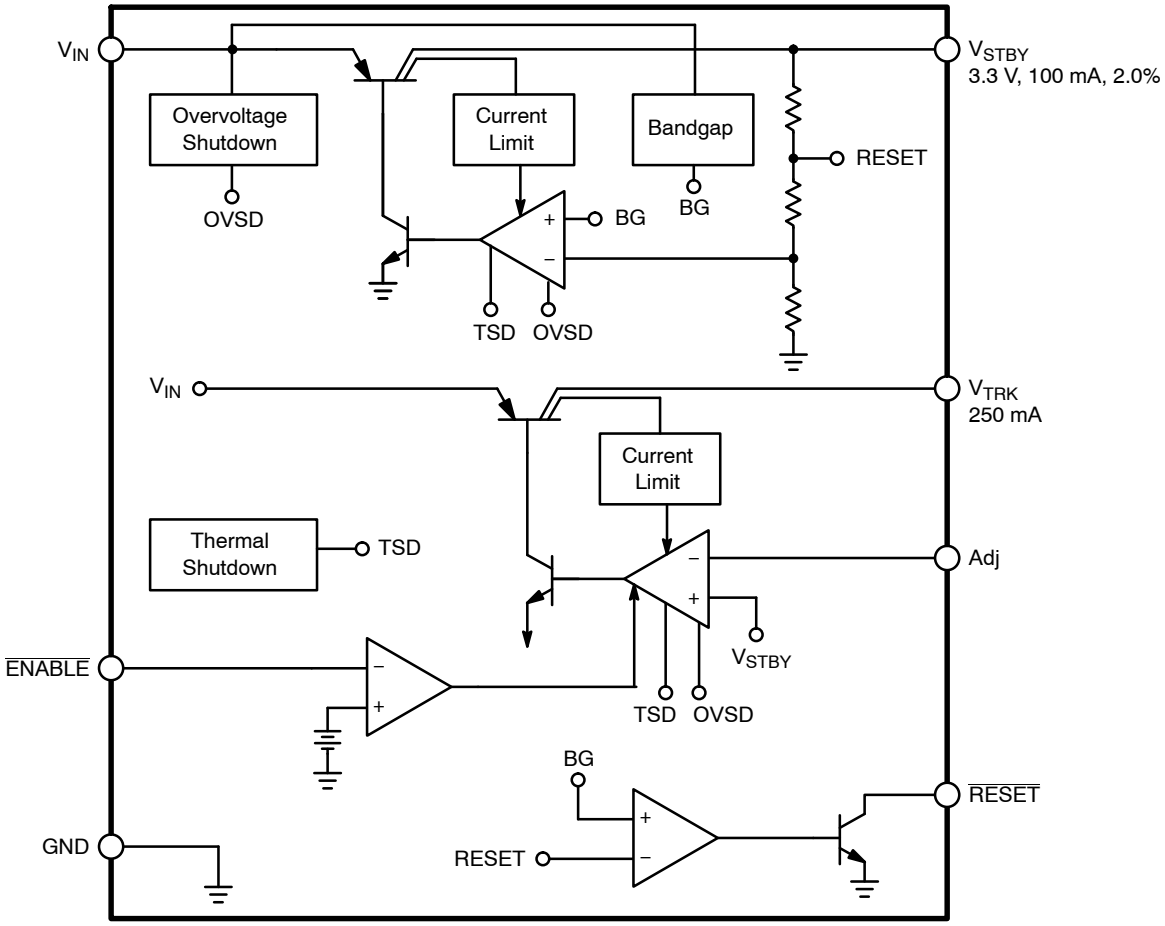

Figure 1. Block Diagram. Consult Your Local Sales Representative for Positive ENABLE Option

ABSOLUTE MAXIMUM RATINGS*

Rating	Value	Unit
Supply Voltage, V_{IN}	−16 to 26	V
Positive Transient Input Voltage, tr > 1.0 ms	60	V
Negative Transient Input Voltage, T < 100 ms, 1.0 % Duty Cycle	−50	V
Input Voltage Range ($\overline{ENABLE}$, $\overline{RESET}$)	−0.3 to 10	V
Junction Temperature	−40 to +150	°C
Storage Temperature Range	−55 to +150	°C
ESD Susceptibility (Human Body Model)	2.0	kV
Lead Temperature Soldering — Wave Solder (through hole styles only) Note 1 Reflow (SMD styles only) Note 2	260 peak 230 peak	°C °C

Stresses exceeding Maximum Ratings may damage the device. Maximum Ratings are stress ratings only. Functional operation above the Recommended Operating Conditions is not implied. Extended exposure to stresses above the Recommended Operating Conditions may affect device reliability.

1. 10 seconds max.
2. 60 seconds max above 183°C

*The maximum package power dissipation must be observed.

ELECTRICAL CHARACTERISTICS (6.0 V ≤ V_{IN} ≤ 26 V, I_{OUT1} = I_{OUT2} = 100 μA, −40°C ≤ T_A ≤ +125°C; unless otherwise stated.)

Characteristic	Test Conditions	Min	Typ	Max	Unit
Tracking Output (V_{TRK})					
V_{TRK} Tracking Error (V_{STBY} − V_{TRK})	6.0 V ≤ V_{IN} ≤ 26 V, 100 μA ≤ I_{TRK} ≤ 250 mA. Note 3	−25	–	+25	mV
Adjust Pin Current, I_{Adj}	Loop in Regulation	–	1.5	5.0	μA
Line Regulation	6.0 V ≤ V_{IN} ≤ 26 V. Note 3	–	5.0	50	mV
Load Regulation	100 μA ≤ I_{TRK} ≤ 250 mA. Note 3	–	5.0	50	mV
Dropout Voltage (V_{IN} − V_{TRK})	I_{TRK} = 100 μA. I_{TRK} = 250 mA	– –	– –	1.05 1.05	mV mV
Current Limit	V_{IN} = 12 V, V_{TRK} = 3.0 V	275	500	–	mA
Quiescent Current	V_{IN} = 12 V, I_{TRK} = 250 mA, No Load on V_{STBY} V_{IN} = 12 V, I_{TRK} = 500 μA, I_{STBY} = 100 μA	– –	25 145	50 220	mA μA
Reverse Current	V_{TRK} = 3.3 V, V_{IN} = 0 V	–	200	1500	μA
Ripple Rejection	f = 120 Hz, I_{TRK} = 250 mA, 7.0 V ≤ V_{IN} ≤ 17 V	60	70	–	dB
Standby Output (V_{STBY})					
Output Voltage, V_{STBY}	4.5 V ≤ V_{IN} ≤ 26 V, 100 μA ≤ I_{STBY} ≤ 100 mA.	3.234	3.3	3.380	V
Line Regulation	6.0 V ≤ V_{IN} ≤ 26 V.	–	5.0	50	mV
Load Regulation	100 μA ≤ I_{STBY} ≤ 100 mA.	–	5.0	50	mV
Dropout Voltage (V_{IN} − V_{STBY})	I_{STBY} = 100 μA, V_{IN} = 4.2 V I_{STBY} = 100 mA, V_{IN} = 4.2 V	– –	– –	1.05 1.05	V V
Current Limit	V_{IN} = 12 V, V_{STBY} = 3.0 V	125	200	–	mA
Short Circuit Current	V_{IN} = 12 V, V_{STBY} = 0 V	10	100	–	mA
Quiescent Current	V_{IN} = 12 V, I_{STBY} = 100 mA, I_{TRK} = 0 mA V_{IN} = 12 V, I_{STBY} = 300 μA, I_{TRK} = 0 mA	– –	10 140	20 200	mA μA
Reverse Current	V_{STBY} = 3.3 V, V_{IN} = 0 V	–	100	200	μA
Ripple Rejection	f = 120 Hz, I_{STBY} = 100 mA, 7.0 V ≤ V_{IN} ≤ 17 V	60	70	–	dB
$\overline{\text{RESET}}$ $\overline{\text{ENABLE}}$ Functions					
$\overline{\text{ENABLE}}$ Input Threshold	–	0.8	1.2	2.0	V
$\overline{\text{ENABLE}}$ Input Bias Current	V_{ENABLE} = 0 V to 10 V	−10	0	10	μA
$\overline{\text{RESET}}$ Hysteresis	–	10	50	150	mV
$\overline{\text{RESET}}$ Threshold Low (V_{RL})	V_{STBY} Decreasing, V_{IN} > 4.5 V	92.5	95	97.5	%V_{STBY}
$\overline{\text{RESET}}$ Leakage	–	–	–	25	μA
Output Voltage, Low (V_{RLO})	1.0 V ≤ V_{STBY} ≤ V_{RL}, R_{RST} = 10 kΩ	–	0.1	0.4	V
Output Voltage, Low (V_{RPEAK})	V_{STBY}, Power Up, Power Down	–	0.6	1.0	V
V_{IN} (V_{RST} Low)	V_{STBY} = 3.3 V	–	4.0	4.5	V
Protection Circuitry (Both Outputs)					
Independent Thermal Shutdown	V_{STBY} V_{TRK}	150 150	180 165	– –	°C °C
Overvoltage Shutdown	–	30	34	38	V

3. V_{TRK} connected to Adj lead. V_{TRK} can be set to higher values by using an external resistor divider.

PACKAGE PIN DESCRIPTION

PACKAGE PIN # D²PAK−7	PIN SYMBOL	FUNCTION
1	V_{STBY}	Standby output voltage delivering 100 mA.
2	V_{IN}	Input voltage.
3	V_{TRK}	Tracking output voltage controlled by $\overline{ENABLE}$ delivering 250 mA.
4	GND	Reference ground connection.
5	Adj	Resistor divider from V_{TRK} to Adj. Sets the output voltage on V_{TRK}. If tied to V_{TRK}, V_{TRK} will track V_{STBY}.
6	$\overline{ENABLE}$	Provides on/off control of the tracking output, active LOW.
7	$\overline{RESET}$	CMOS compatible output lead that goes low whenever V_{STBY} falls out of regulation.

CIRCUIT DESCRIPTION

$\overline{ENABLE}$ Function

The $\overline{ENABLE}$ function switches the output transistor for V_{TRK} on and off. When the $\overline{ENABLE}$ lead voltage exceeds 1.4 V (Typ), V_{TRK} turns off. This input has several hundred millivolts of hysteresis to prevent spurious output activity during power−up or power−down.

$\overline{RESET}$ Function

The $\overline{RESET}$ is an open collector NPN transistor, controlled by a low voltage detection circuit sensing the V_{STBY} (3.3 V) output voltage. This circuit guarantees the $\overline{RESET}$ output stays below 1.0 V (0.1 V Typ) when V_{STBY} is as low as 1.0 V to ensure reliable operation of microprocessor−based systems.

V_{TRK} Output Voltage

This output uses the same type of output device as V_{STBY}, but is rated for 250 mA. The output is configured as a tracking regulator of the standby output. By using the standby output as a voltage reference, giving the user an external programming lead (Adj lead), output voltages from 3.3 V to 20 V are easily realized. The programming is done with a simple resistor divider, and following the formula:

$$V_{TRK} = V_{STBY} \times (1 + R1/R2) + I_{Adj} \times R1$$

If another 3.3 V output is needed, simply connect the Adj lead to the V_{TRK} output lead.

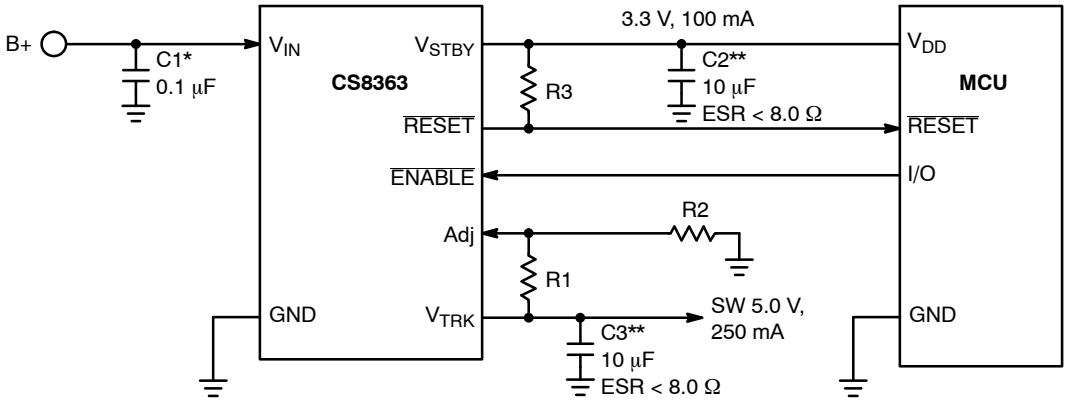

$V_{TRK} \sim V_{STBY}(1 + R1/R2)$
For $V_{TRK} \sim 5.0$ V, R1/R2 ~ 0.5
*C1 is required if regulator is located far from power supply filter.
**C2 and C3 are required for stability.

Figure 2. Test and Application Circuit, 3.3 V, 5.0 V Regulator

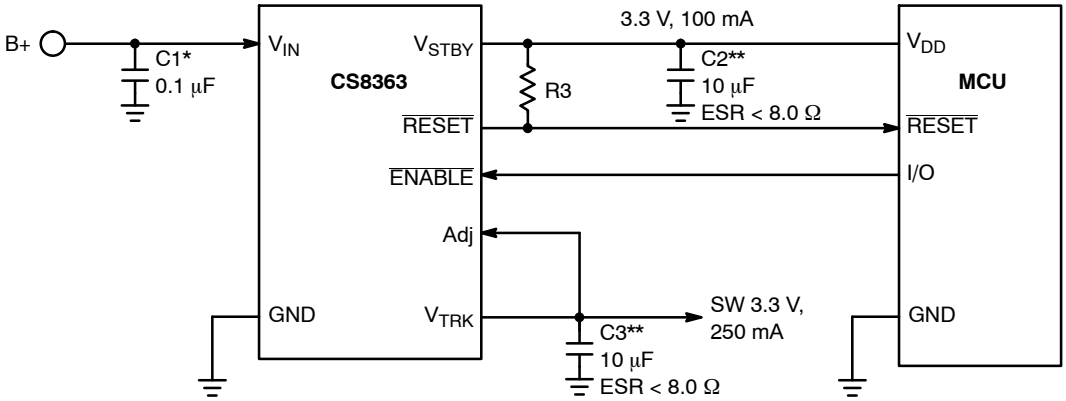

*C1 is required if regulator is located far from power supply filter.
**C2 and C3 are required for stability.

Figure 3. Test and Application Circuit, Dual 3.3 V Regulator

APPLICATION NOTES

External Capacitors

Output capacitors for the CS8363 are required for stability. Without them, the regulator outputs will oscillate. Actual size and type may vary depending upon the application load and temperature range. Capacitor effective series resistance (ESR) is also a factor in the IC stability. Worst−case is determined at the minimum ambient temperature and maximum load expected.

Output capacitors can be increased in size to any desired value above the minimum. One possible purpose of this would be to maintain the output voltages during brief conditions of negative input transients that might be characteristic of a particular system.

Capacitors must also be rated at all ambient temperatures expected in the system. To maintain regulator stability down to −40°C, capacitors rated at that temperature must be used.

More information on capacitor selection for SMART REGULATOR®s is available in the SMART REGULATOR application note, “Compensation for Linear Regulators,” document number SR003AN/D, available through the Literature Distribution Center or via our website at http://www.onsemi.com.

Calculating Power Dissipation in a Dual Output Linear Regulator

The maximum power dissipation for a dual output regulator (Figure 4) is

$$P_{D(max)} = [V_{IN(max)} - V_{OUT1(min)}]I_{OUT1(max)} + [V_{IN(max)} - V_{OUT2(min)}]I_{OUT2(max)} + V_{IN(max)}I_Q \quad (1)$$

where:

$V_{IN(max)}$ is the maximum input voltage,

$V_{OUT1(min)}$ is the minimum output voltage from V_{OUT1},

$V_{OUT2(min)}$ is the minimum output voltage from V_{OUT2},

$I_{OUT1(max)}$ is the maximum output current, for the application,

$I_{OUT2(max)}$ is the maximum output current, for the application, and

I_Q is the quiescent current the regulator consumes at both $I_{OUT1(max)}$ and $I_{OUT2(max)}$.

Once the value of $P_{D(max)}$ is known, the maximum permissible value of $R_{\theta JA}$ can be calculated:

$$R_{\Theta JA} = \frac{150^\circ C - T_A}{P_D} \quad (2)$$

The value of $R_{\theta JA}$ can be compared with those in the package section of the data sheet. Those packages with $R_{\theta JA}$’s less than the calculated value in equation 2 will keep the die temperature below 150°C.

In some cases, none of the packages will be sufficient to dissipate the heat generated by the IC, and an external heatsink will be required.

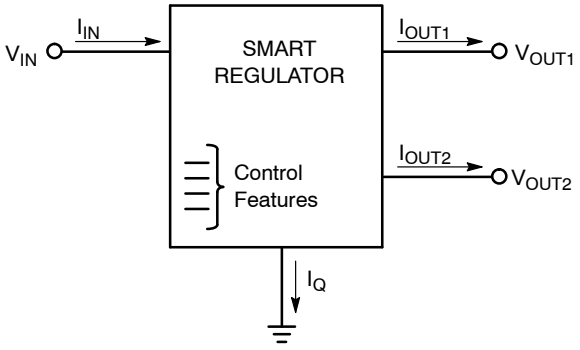

Figure 4. Dual Output Regulator With Key Performance Parameters Labeled.

Heat Sinks

A heat sink effectively increases the surface area of the package to improve the flow of heat away from the IC and into the surrounding air.

Each material in the heat flow path between the IC and the outside environment will have a thermal resistance. Like series electrical resistances, these resistances are summed to determine the value of $R_{\theta JA}$:

$$R_{\Theta JA} = R_{\Theta JC} + R_{\Theta CS} + R_{\Theta SA} \quad (3)$$

where:

$R_{\theta JC}$ = the junction−to−case thermal resistance,
$R_{\theta CS}$ = the case−to−heatsink thermal resistance, and
$R_{\theta SA}$ = the heatsink−to−ambient thermal resistance.

$R_{\theta JC}$ appears in the package section of the data sheet. Like $R_{\theta JA}$, it too is a function of package type. $R_{\theta CS}$ and $R_{\theta SA}$ are functions of the package type, heatsink and the interface between them. These values appear in heat sink data sheets of heat sink manufacturers.

PACKAGE DIMENSIONS

D²PAK−7 (SHORT LEAD)
DPS SUFFIX
CASE 936AB−01
ISSUE B

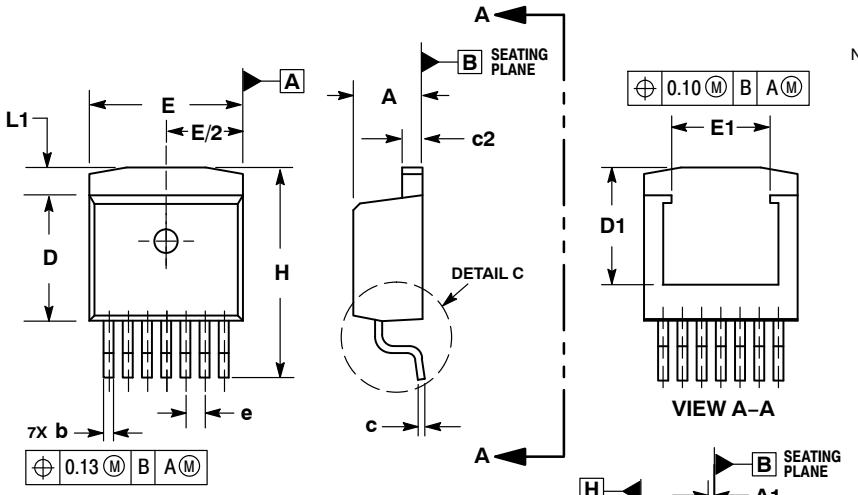

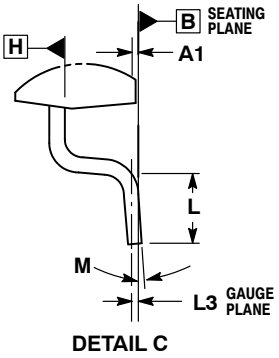

NOTES:
1. DIMENSIONING AND TOLERANCING PER ASME Y14.5M, 1994.
2. CONTROLLING DIMENSION: INCHES.
3. DIMENSIONS D AND E DO NOT INCLUDE MOLD FLASH AND GATE PROTRUSIONS. MOLD FLASH AND GATE PROTRUSIONS NOT TO EXCEED 0.005 MAXIMUM PER SIDE. THESE DIMENSIONS TO BE MEASURED AT DATUM H.
4. THERMAL PAD CONTOUR OPTIONAL WITHIN DIMENSIONS E, L1, D1, AND E1. DIMENSIONS D1 AND E1 ESTABLISH A MINIMUM MOUNTING SURFACE FOR THE THERMAL PAD.

	INCHES		MILLIMETERS	
DIM	MIN	MAX	MIN	MAX
A	0.170	0.180	4.32	4.57
A1	0.000	0.010	0.00	0.25
b	0.026	0.036	0.66	0.91
c	0.017	0.026	0.43	0.66
c2	0.045	0.055	1.14	1.40
D	0.325	0.368	8.25	9.53
D1	0.270	−−−	6.86	−−−
E	0.380	0.420	9.65	10.67
E1	0.245	−−−	6.22	−−−
e	0.050 BSC		1.27 BSC	
H	0.539	0.579	13.69	14.71
L	0.058	0.078	1.47	1.98
L1	−−−	0.066	−−−	1.68
L3	0.010 BSC		0.25 BSC	
M	0 °	8 °	0 °	8 °

RECOMMENDED SOLDERING FOOTPRINT*

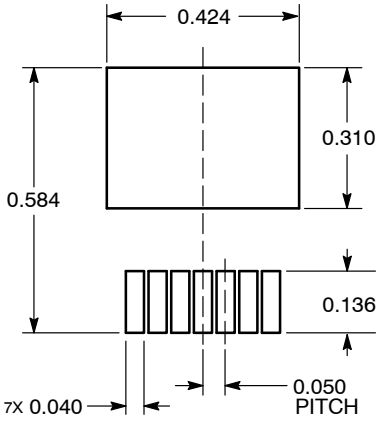

DIMENSIONS: MILLIMETERS

*For additional information on our Pb−Free strategy and soldering details, please download the ON Semiconductor Soldering and Mounting Techniques Reference Manual, SOLDERRM/D.

PACKAGE THERMAL DATA

Parameter		D²PAK−7	Unit
$R_{\theta JC}$	Typical	3.5	°C/W
$R_{\theta JA}$	Typical	10−50*	°C/W

*Depending on thermal properties of substrate. $R_{\theta JA} = R_{\theta JC} + R_{\theta CA}$.

SMART REGULATOR is a registered trademark of Semiconductor Components Industries, LLC (SCILLC).

ON Semiconductor and ON are registered trademarks of Semiconductor Components Industries, LLC (SCILLC). SCILLC reserves the right to make changes without further notice to any products herein. SCILLC makes no warranty, representation or guarantee regarding the suitability of its products for any particular purpose, nor does SCILLC assume any liability arising out of the application or use of any product or circuit, and specifically disclaims any and all liability, including without limitation special, consequential or incidental damages. “Typical” parameters which may be provided in SCILLC data sheets and/or specifications can and do vary in different applications and actual performance may vary over time. All operating parameters, including “Typicals” must be validated for each customer application by customer’s technical experts. SCILLC does not convey any license under its patent rights nor the rights of others. SCILLC products are not designed, intended, or authorized for use as components in systems intended for surgical implant into the body, or other applications intended to support or sustain life, or for any other application in which the failure of the SCILLC product could create a situation where personal injury or death may occur. Should Buyer purchase or use SCILLC products for any such unintended or unauthorized application, Buyer shall indemnify and hold SCILLC and its officers, employees, subsidiaries, affiliates, and distributors harmless against all claims, costs, damages, and expenses, and reasonable attorney fees arising out of, directly or indirectly, any claim of personal injury or death associated with such unintended or unauthorized use, even if such claim alleges that SCILLC was negligent regarding the design or manufacture of the part. SCILLC is an Equal Opportunity/Affirmative Action Employer. This literature is subject to all applicable copyright laws and is not for resale in any manner.

PUBLICATION ORDERING INFORMATION

LITERATURE FULFILLMENT:
Literature Distribution Center for ON Semiconductor
P.O. Box 5163, Denver, Colorado 80217 USA
Phone: 303−675−2175 or 800−344−3860 Toll Free USA/Canada
Fax: 303−675−2176 or 800−344−3867 Toll Free USA/Canada
Email: orderlit@onsemi.com

N. American Technical Support: 800−282−9855 Toll Free USA/Canada
Europe, Middle East and Africa Technical Support:
Phone: 421 33 790 2910
Japan Customer Focus Center
Phone: 81−3−5773−3850

ON Semiconductor Website: **www.onsemi.com**

Order Literature: http://www.onsemi.com/orderlit

For additional information, please contact your local Sales Representative

Компания «ЭлектроПласт» предлагает заключение долгосрочных отношений при поставках импортных электронных компонентов на взаимовыгодных условиях!

Наши преимущества:

- Оперативные поставки широкого спектра электронных компонентов отечественного и импортного производства напрямую от производителей и с крупнейших мировых складов;
- Поставка более 17-ти миллионов наименований электронных компонентов;
- Поставка сложных, дефицитных, либо снятых с производства позиций;
- Оперативные сроки поставки под заказ (от 5 рабочих дней);
- Экспресс доставка в любую точку России;
- Техническая поддержка проекта, помощь в подборе аналогов, поставка прототипов;
- Система менеджмента качества сертифицирована по Международному стандарту ISO 9001;
- Лицензия ФСБ на осуществление работ с использованием сведений, составляющих государственную тайну;
- Поставка специализированных компонентов (Xilinx, Altera, Analog Devices, Intersil, Interpoint, Microsemi, Aeroflex, Peregrine, Syfer, Eurofarad, Texas Instrument, Miteq, Cobham, E2V, MA-COM, Hittite, Mini-Circuits,General Dynamics и др.);

Помимо этого, одним из направлений компании «ЭлектроПласт» является направление «Источники питания». Мы предлагаем Вам помощь Конструкторского отдела:

- Подбор оптимального решения, техническое обоснование при выборе компонента;
- Подбор аналогов;
- Консультации по применению компонента;
- Поставка образцов и прототипов;
- Техническая поддержка проекта;
- Защита от снятия компонента с производства.

Как с нами связаться

Телефон: 8 (812) 309 58 32 (многоканальный)
Факс: 8 (812) 320-02-42
Электронная почта: org@eplast1.ru
Адрес: 198099, г. Санкт-Петербург, ул. Калинина, дом 2, корпус 4, литера А.