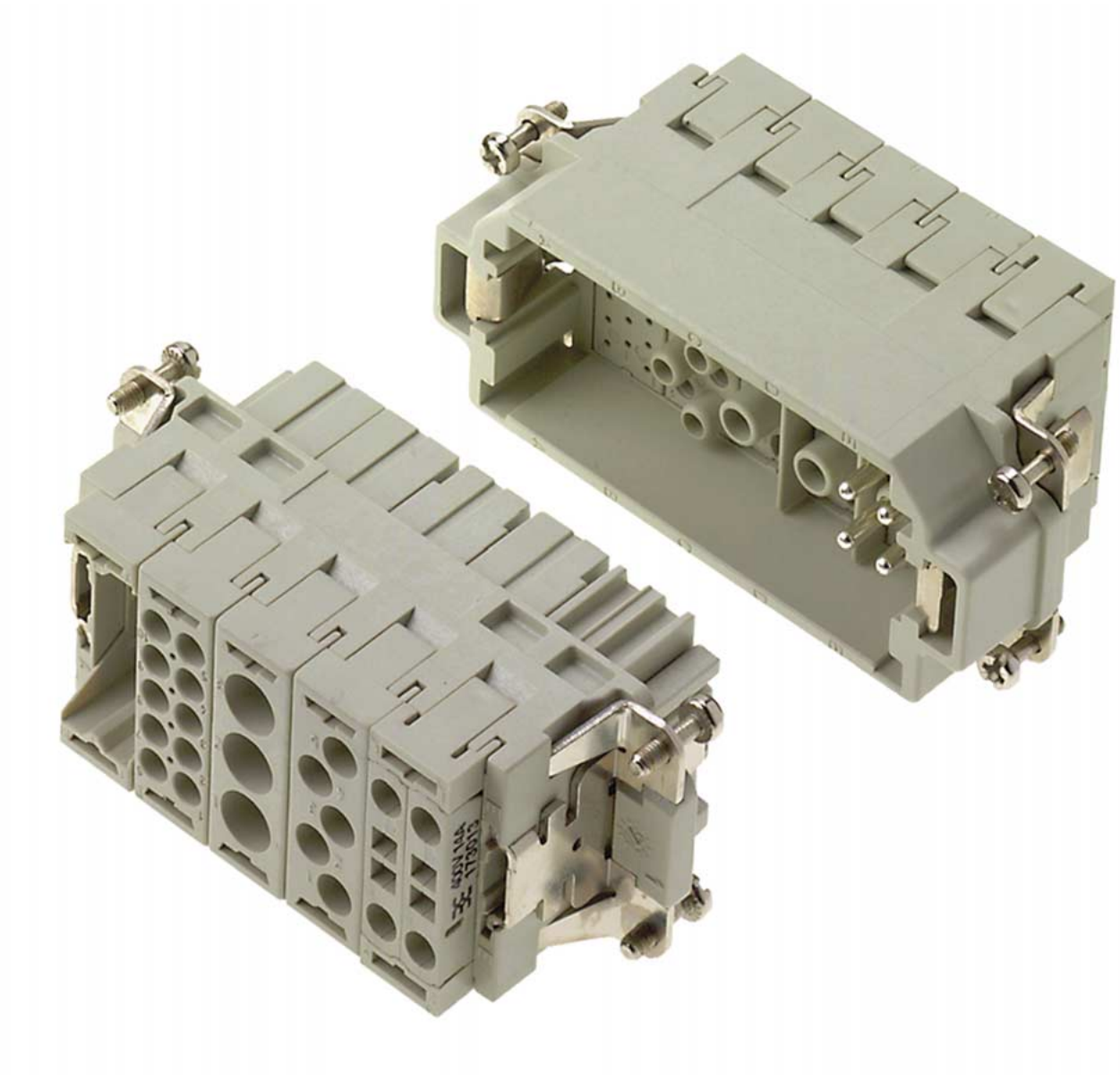

Series ConCept

Series ConCept

- Screw connection (2-pole)
- Crimp contact (3- to 20-pole)
- Tension clamp (4-pole)
- Poles numbers: 2, 3, 4, 5, 10, 20
- Stamped or turned crimp contacts

Universal and flexible – the solution for a large number of applications
The modular ConCept connector system is a low-cost alternative of the well-known and proven HE inserts with fixed poles. It provides the user with flexibility in standard applications and in applications that require customized connectors.

Weidmüller have expanded the system by a tension clamp and a crimp module that offers a free selection of the connecting technology: crimp or tension clamp.

The steadily increasing number of modules with varying numbers of poles and electrical specifications are the basis of a very high number of combination options. Six different male and female modules with different power data and connecting technology, in conjunction with the mounting frames for 2, 3, 5, or 7 modules provide variable connector combinations options.

Single or double-row frames, in combination with standard housings create a reliable connection in machines, switchgear cabinets, motors and installations.

Benefits:

- signal and power transmission possible via the same connector
- extremely flexible due to a large number of practical combinations of modules, frames, hoods and housings
- free choice of the connecting technology in the modules
- crimp module for low-cost HE crimps
- tension clamp module for time-saving processing, maintenance-free and highly vibration-proof
- modules and frames made from a PC material without halogene or phosphorus

ConCept / Technical Data

NEW

		630 V/40 A	400* V/20 A	250 V/10 A	100 V/4 A	630 V/25 A	400 V/14 A	1000 V/82 A	1000 V/82 A
System specifications									
Pole number		3	5	10	20	4	4	1/1 PE	2
Description		CM-3	CM-5	CM-10	CM-20	CM-HE	CM-4BZF/4SZF	CM 1 + PE	CM-2
Contact diameter	mm	3.6	2.5	1.6	1	2.5	2.5	6	6
Connection method		crimp	crimp	crimp	crimp	crimp	tension clamp	screw	screw
Contact		turned	turned	turned	stamped	turned	turned	turned	turned
Condutctor cross-section									
	mm^2	1.5…10.0[2]	0.75…4.0[1]	0.14…2.5[1]	0.08…0.52[1]	0.5…4[1]	0.5…2.5[1]	4.0…16.0	4.0…16.0
AWG conductor		12…7	20…12	26…14	28…20	20…12	20…12	12…6	12…6
Electrical specification plastic PC									
Colour: **grey**									
Rated voltage max.	V	630	250	250	100	630	400	1000	1000
Rated current max.	A	40	20	10	4	25	14	82	82
Impulse voltage	KV	8	6	4	1.5	8	6	6	6
Pollution severity		3	3	3	3	3	3	3	3
Insulation resistance	Ω >	10^{12}	10^{12}	10^{11}	10^{12}	10^{12}	10^{12}	10^{12}	10^{12}
Overvoltage category		III	III	III	III	III	III	III	III
Through resistance	mΩ	< 5	< 5	< 5	< 5	< 5	< 5	< 5	< 5
Electrical specification plastic PA									
Colour: **black**									
Rated voltage max.	V	630	400	250	100				
Rated current max.	A	40	20	10	4				
Impulse voltage	kV	8	6	4	1.5				
Pollution severity		3	3	3	3				
Insulation resistance	Ω >	10^{11}	10^{11}	10^{10}	10^{11}				
Overvoltage category		III	III	III	III				
Through resistance	mΩ	< 5	< 5	< 5	< 5				
			*400 Volt only if black modules						
Materials data									
• Modules									
Flammability class UL 94		V-0							
Plastic material		PA/PC (grey, RAL 7032)							
		PA (black, RAL 9005)[3]							
• Frames									
Flammability class UL 94		V-0							
Plastic material		PC (grey, RAL 7032)							
		PA (black, RAL 9005)[3]							
• Contacts									
Basic material		Cu-alloy							
Plating		Ag	Ag	Ag/Au	Ag	Ag/Au	Ag		

Application note:
Weidmüller connectors are tested according to the DIN VDE 0627 standard, and are valid for its field of applications. Provided
that the connectors are used for the intended purpose, all requirements with respect to the occuring of electrical, mechanical, thermic and corrosive stress will be satisfied. Connectors are not allowed to be operated under loading.

1) Ferrules are required for the connection of conductors with a cross-section ≤ 0.75 mm^2.
2) Ring tongues are required for the connection of conductors with a cross-section 6 mm^2 to 10 mm^2 .
3) 4-pole crimp module CM-HE and tension clamp module CM-4BZF/4SZF are only available in PC (grey).

ConCept / Derating Curves

Module CM-3

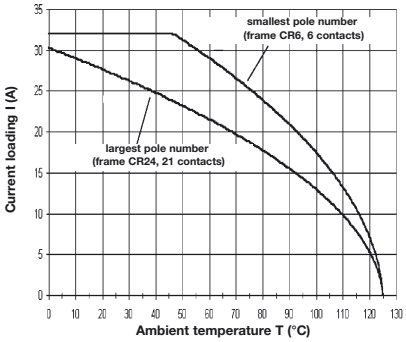

ConCept module CM-3
Conductor H07V-K4.0 mm^2

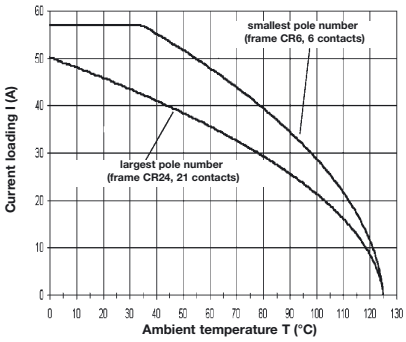

ConCept module CM-3
Conductor H07V-K10.0 mm^2

Module CM-5

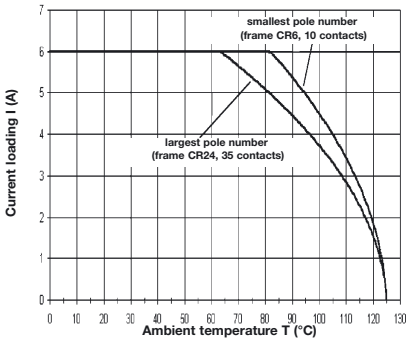

ConCept module CM-5
Conductor H05V-K0.5 mm^2

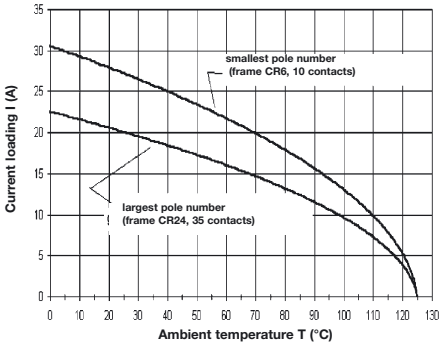

ConCept module CM-5
Conductor H07V-K4.0 mm^2

Module CM-10

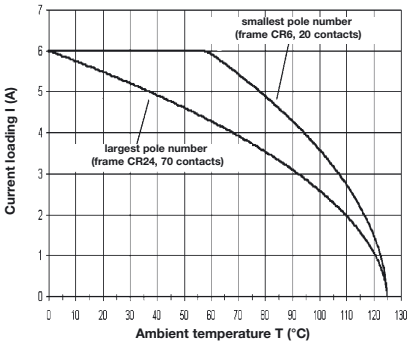

ConCept module CM-10
Conductor H05V-K0.5 mm^2

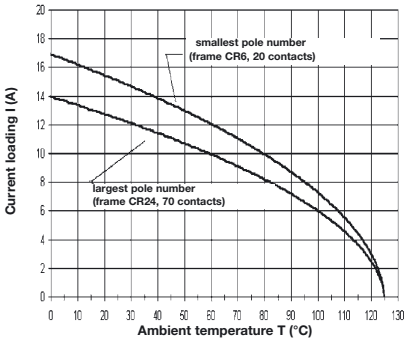

ConCept module CM-10
Conductor H07V-K2.5 mm^2

Module CM-20

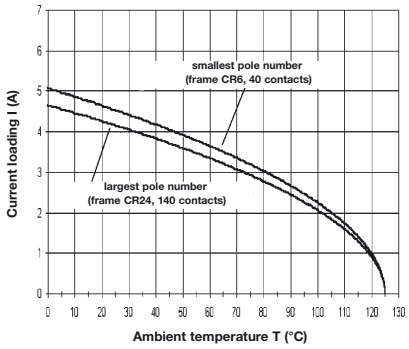

ConCept module CM-20
AWG-Conductor 20/19

Module CM-HE

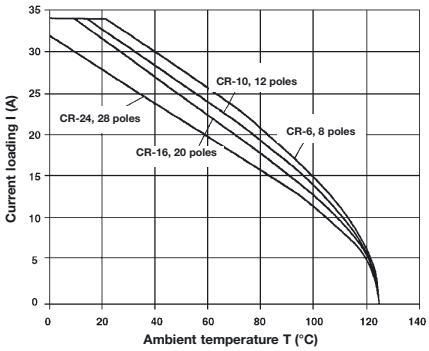

ConCept module CM-HE
Conductor H07V-K4.0 mm^2

Module CM-4BZF/4SZF

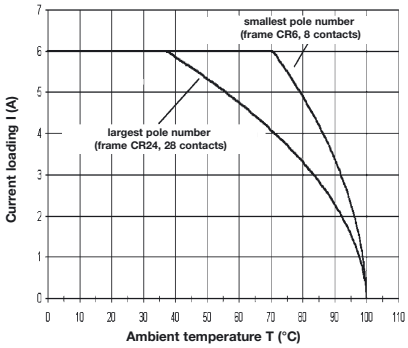

ConCept module CM-4BZF/4SZF
Conductor H05V-K0.5 mm^2

Module CM-2

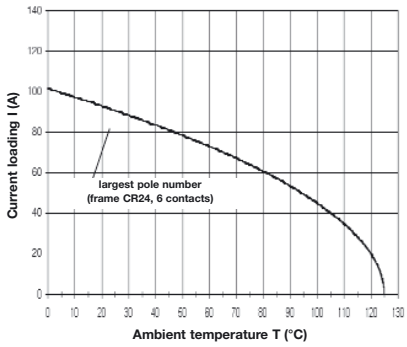

ConCept module CM-2
Conductor 16 mm^2

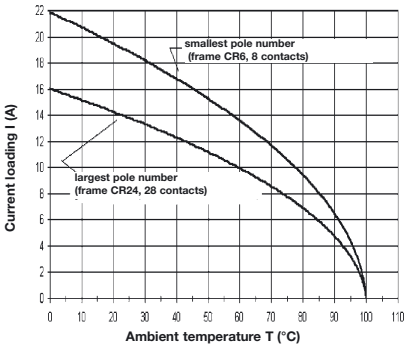

ConCept module CM-4BZF/4SZF
Conductor H07V-K2.5 mm^2

Crimp connection CM-3SCM

3-pole **630 V/40 A**

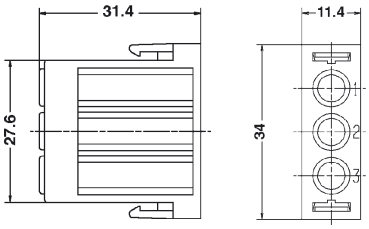

Crimp connection CM-5SCM

5-pole **250* V/20 A**

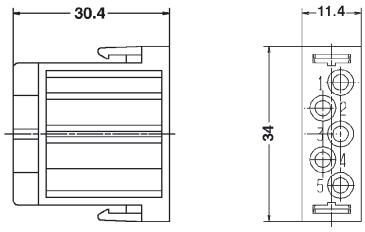

Crimp connection CM-10SCM

10-pole **250 V/10 A**

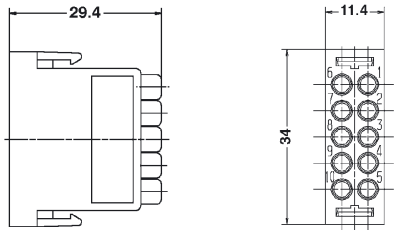

Crimp connection CM-3BCM

3-pole **630 V/40 A**

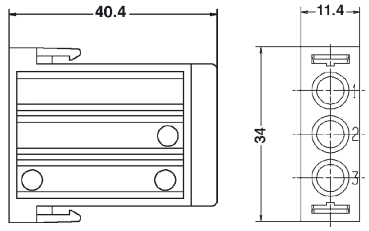

Crimp connection CM-5BCM

5-pole **250* V/20 A**

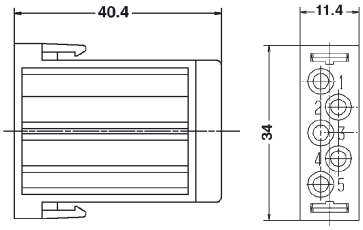

Crimp connection CM-10BCM

10-pole **250 V/10 A**

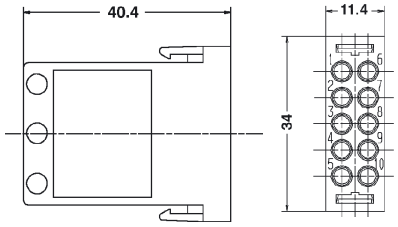

For turned contacts

Colour			Black	Grey
Version	Type	Cat. No.	Cat. No.	Qty.
Male	HDC-CM-3SCM	**1682080000**	**1758360000**	10
Female	HDC-CM-3BCM	**1682090000**	**1758370000**	10

For turned contacts

Colour			Black	Grey
Version	Type	Cat. No.	Cat. No.	Qty.
Male	HDC-CM-5SCM	**1682100000**	**1758380000**	10
Female	HDC-CM-5BCM	**1682110000**	**1758390000**	10

* 400 V for black modules

For turned contacts

Colour			Black	Grey
Version	Type	Cat. No.	Cat. No.	Qty.
Male	HDC-CM-10SCM	**1682120000**	**1758400000**	10
Female	HDC-CM-10BCM	**1682130000**	**1758410000**	10

ConCept Modules

Crimp connection CM-20SCM

20-pole **100 V/4 A**

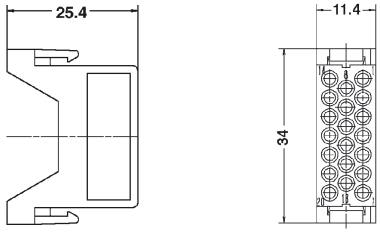

Crimp connection CM-HE 4S GR

4-pole **630 V/25 A**

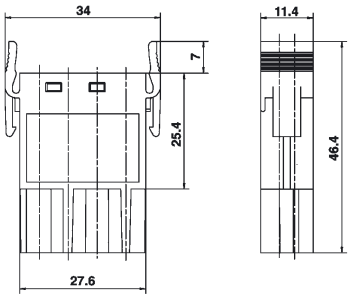

Tension clamp CM-4SZF AG

4-pole **400 V/14 A**

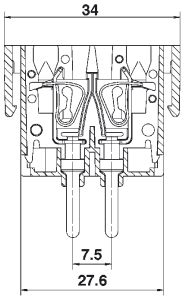

Crimp connection CM-20BCM

20-pole **100 V/4 A**

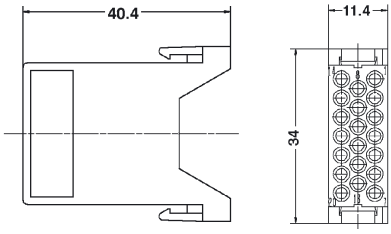

Crimp connection CM-HE 4B GR

4-pole **630 V/25 A**

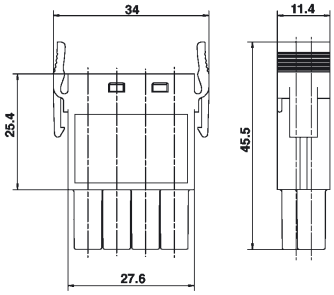

Tension clamp CM-4BZF AG

4-pole **400 V/14 A**

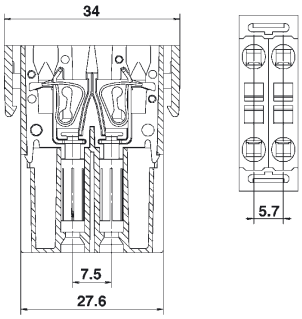

For stamped contacts

Colour			Black	Grey
Version	Type	Cat. No.	Cat. No.	Qty.
Male	HDC-CM-20SCM	**1682160000**	**1758420000**	10
Female	HDC-CM-20BCM	**1682170000**	**1758430000**	10

For turned contacts

Colour			Grey
Version	Type	Cat. No.	Qty.
Male	HDC-CM-HE-4S GR	**1758340000**	10
Female	HDC-CM-HE-4B GR	**1758350000**	10

Colour			Grey
Version	Type	Cat. No.	Qty.
Male	HDC-CM-4SZF AG	**1730120000**	10
Female	HDC-CM-4BZF AG	**1730130000**	10

NEW

Screw connection CM-1 SS + PE

1-pole + PE **1000 V/82 A**

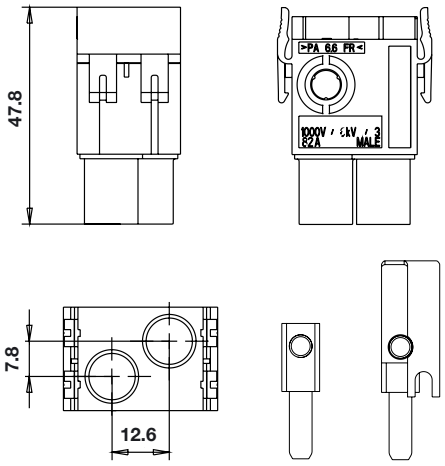

Screw connection CM-2 SS

2-pole **1000 V/82 A**

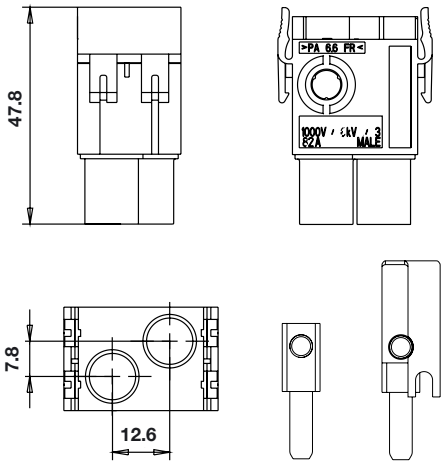

Screw connection CM-1 BS + PE

1-pole + PE **1000 V/82 A**

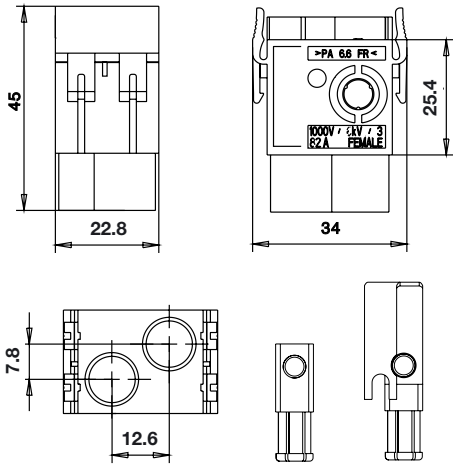

Colour **Grey**

Version	Type	Cat. No.	Qty.
Male	HDC-CM 1SS+PE	**1807980000**	5
Female	HDC-CM 1BS+PE	**1808000000**	5

Screw connection CM-2 BS

2-pole **1000 V/82 A**

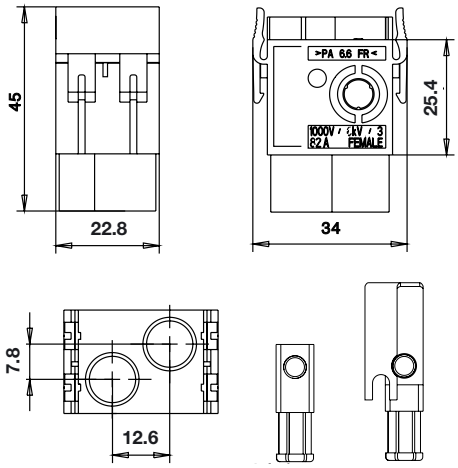

Colour **Grey**

Version	Type	Cat. No.	Qty.
Male	HDC-CM 2SS	**1807970000**	5
Female	HDC-CM 2BS	**1807990000**	5

ConCept / Crimp Contacts

Crimp contacts must be ordered separately. Basis of the turned and stamped contacts is a brass-alloy. Contact platings are available either in gold- or silver-plated versions. Stamped contacts are only available with gold coating. The male and female inserts are optionally available for stamped or turned contacts. Please select required crimp contacts.

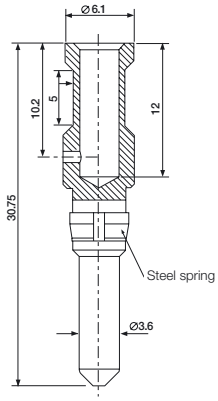

CM-3 Male

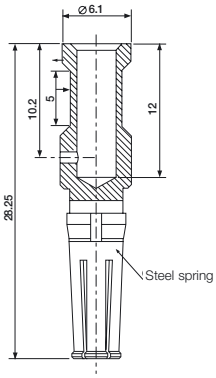

CM-3 Female

Turned crimp contacts for module CM-3

Contact diameter of pin Ø 3.6 mm

Cross-section mm²	AWG	Plating	Version	Type	Cat. No.	Qty.
1.5	16	Ag	Male	HDC-C-M3-SM1.5Ag	**1698120000**	100
1.5	16	Ag	Female	HDC-C-M3-BM1.5Ag	**1698130000**	100
2.5	14	Ag	Male	HDC-C-M3-SM2.5Ag	**1698140000**	100
2.5	14	Ag	Female	HDC-C-M3-BM2.5Ag	**1698150000**	100
4.0	12	Ag	Male	HDC-C-M3-SM4.0Ag	**1682260000**	100
	12	Ag	Female	HDC-C-M3-BM4.0Ag	**1682270000**	100
6.0	10	Ag	Male	HDC-C-M3-SM6.0Ag	**1682280000**	100
	10	Ag	Female	HDC-C-M3-BM6.0Ag	**1682290000**	100
10.0	7	Ag	Male	HDC-C-M3-SM10.0Ag	**1682300000**	100
	7	Ag	Female	HDC-C-M3-BM10.0Ag	**1682310000**	100

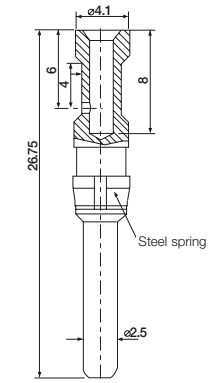

CM-5 Male

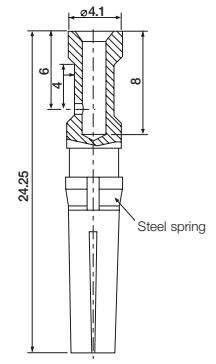

CM-5 Female

Turned crimp contacts for module CM-5

Contact diameter of pin Ø 2.5 mm

Cross-section mm²	AWG	Plating	Version	Type	Cat. No.	Qty.
0.75-1.0	18	Ag	Male	HDC-C-M5-SM0.75-1.0Ag	**1682340000**	100
	18	Ag	Female	HDC-C-M5-BM0.75-1.0Ag	**1682350000**	100
1.5	16	Ag	Male	HDC-C-M5-SM1.5Ag	**1682360000**	100
	16	Ag	Female	HDC-C-M5-BM1.5Ag	**1682370000**	100
2.5	14	Ag	Male	HDC-C-M5-SM2.5Ag	**1682380000**	100
	14	Ag	Female	HDC-C-M5-BM2.5Ag	**1682390000**	100
4.0	12	Ag	Male	HDC-C-M5-SM4.0Ag	**1682400000**	100
	12	Ag	Female	HDC-C-M5-BM4.0Ag	**1682410000**	100

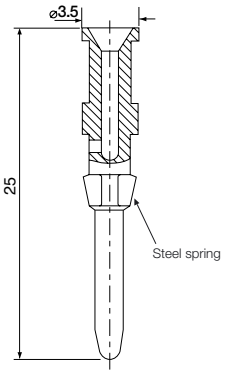

CM-10 Male

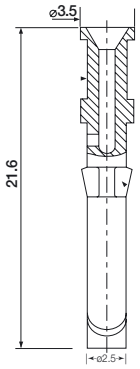

CM-10 Female

Turned crimp contacts for module CM-10

Contact diameter of pin Ø 1.6 mm

Cross-section mm²	AWG	Plating	Version	Type	Cat. No.	Qty.
0.14 - 0.37	26…22	Au	Male	HDC-C-HD-SM0.14-0.37Au	**1651620000**	100
	26…22	Au	Female	HDC-C-HD-BM0.14-0.37Au	**1651670000**	100
	26…22	Ag	Male	HDC-C-HD-SM0.14-0.37Ag	**1651520000**	100
	26…22	Ag	Female	HDC-C-HD-BM0.14-0.37Ag	**1651570000**	100
0.5	20	Au	Male	HDC-C-HD-SM0.5Au	**1651630000**	100
	20	Au	Female	HDC-C-HD-BM0.5Au	**1651680000**	100
	20	Ag	Male	HDC-C-HD-SM0.5Ag	**1651530000**	100
	20	Ag	Female	HDC-C-HD-BM0.5Ag	**1651580000**	100
0.75 - 1.00	18	Au	Male	HDC-C-HD-SM0.75-1.00Au	**1651640000**	100
	18	Au	Female	HDC-C-HD-BM0.75-1.00Au	**1651690000**	100
	18	Ag	Male	HDC-C-HD-SM0.75-1.00Ag	**1601750000**	100
	18	Ag	Female	HDC-C-HD-BM0.75-1.00Ag	**1601760000**	100
1.5	16	Au	Male	HDC-C-HD-SM1.5Au	**1651650000**	100
	16	Au	Female	HDC-C-HD-BM1.5Au	**1651700000**	100
	16	Ag	Male	HDC-C-HD-SM1.5Ag	**1651550000**	100
	16	Ag	Female	HDC-C-HD-BM1.5Ag	**1651600000**	100
2.5	14	Au	Male	HDC-C-HD-SM2.5Au	**1651660000**	100
	14	Au	Female	HDC-C-HD-BM2.5Au	**1651710000**	100
	14	Ag	Male	HDC-C-HD-SM2.5Ag	**1651560000**	100
	14	Ag	Female	HDC-C-HD-BM2.5Ag	**1651610000**	100

*** We recommend the mounting tool HDC-DW-M10, order no. 1688220000, for securing contacts into the insert. The contact is safely positioned in the insert when it audibly clicks into place.**

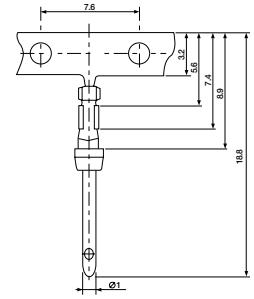

CM-20 Male

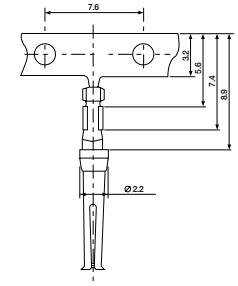

CM-20 Female

Stamped crimp contacts for module CM-20

Contact diameter of pin Ø 1 mm

Cross-section mm^2	AWG	Plating	Version	Type	Cat. No.	Qty. [1]
0.08-0.2	28…24	Au	Male	HDC-C-M20-SCG0.08-0.2Au	**1682420000**	300
	28…24	Au	Female	HDC-C-M20-BCG0.08-0.2Au	**1682430000**	300
0.2-0.52	24…20	Au	Male	HDC-C-M20-SCG0.2-0.52Au	**1682440000**	300
	24…20	Au	Female	HDC-C-M20-BCG0.2-0.52Au	**1682450000**	300

1) Bandolier contacts wrapped on reel

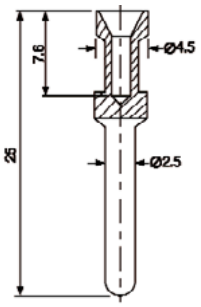

CM-HE Male

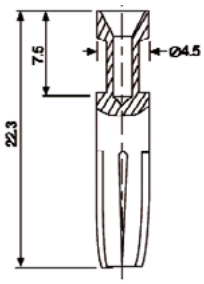

CM-HE Female

Turned crimp contacts for module CM-HE

Contact diameter of pin Ø 1 mm

Cross-section mm^2	AWG	Plating	Version	Type	Cat. No.	Qty.
0.5	20	Au	Male	HDC-C-HE-SM0.5Au	**1651420000**	100
	20	Ag	Male	HDC-C-HE-SM0.5Ag	**1200500000**	100
0.5	20	Au	Female	HDC-C-HE-BM0.5Au	**1651470000**	100
	20	Ag	Female	HDC-C-HE-BM0.5Ag	**1201100000**	100
0.75 - 1.00	18	Au	Male	HDC-C-HE-SM0.75-1.00Au	**1651430000**	100
	18	Ag	Male	HDC-C-HE-SM0.75-1.00Ag	**1200600000**	100
0.75 - 1.00	18	Au	Female	HDC-C-HE-BM0.75-1.00Au	**1651480000**	100
	18	Ag	Female	HDC-C-HE-BM0.75-1.00Ag	**1201200000**	100
1.5	16	Au	Male	HDC-C-HE-SM1.5Au	**1651440000**	100
	16	Ag	Male	HDC-C-HE-SM1.5Ag	**1200700000**	100
1.5	16	Au	Female	HDC-C-HE-BM1.5Au	**1651490000**	100
	16	Ag	Female	HDC-C-HE-BM1.5Ag	**1201300000**	100
2.5	14	Au	Male	HDC-C-HE-SM2.5Au	**1651450000**	100
	14	Ag	Male	HDC-C-HE-SM2.5Ag	**1200800000**	100
2.5	14	Au	Female	HDC-C-HE-BM2.5Au	**1651500000**	100
	14	Ag	Female	HDC-C-HE-BM2.5Ag	**1201400000**	100
4.0	12	Au	Male	HDC-C-HE-SM4.0Au	**1651460000**	100
	12	Ag	Male	HDC-C-HE-SM4.0Ag	**1200900000**	100
4.0	12	Au	Female	HDC-C-HE-BM4.0Au	**1651510000**	100
	12	Ag	Female	HDC-C-HE-BM4.0Ag	**1201500000**	100

ConCept / Accessories

Crimping tools

Special type for HE male and female contact

CZB 1

Type	Description	Cat. No.	Qty.
CZB 1	crimping tool	**9012710000**	1
for 1.5…4.0 mm² conductor cross-section			

Preferred type for turned HE, HD and HDD contacts and ConCept contacts

CTX CM

HDC-CM 20

Type	Description	Cat. No.	Qty.
CTX CM 3.6	crimping tool	**9018480000**	1
for Ø 3.6 mm contacts with 4.0…10.0 mm² conductor cross-section of ConCept module CM-3			
CTX CM 1.6/2.5	crimping tool	**9018490000**	1
for Ø 1.6 mm/Ø 2.5 mm contacts with 0.14…2.5 mm² conductor cross-section, of turned HE-, turned HD-, HDD and ConCept contacts			
HDC-CM-3	crimping tool	**1700890000**	1
1.5…10 mm² conductor cross-section of ConCept module CM-3			
HDC-CM-20	crimping tool	**1700900000**	1
for Ø 1.0 mm D-Sub contacts with 0.08…0.52 mm² conductor cross-section of ConCept module CM-20			

Screwdriver

SD

Type	Description	Cat. No.	Qty.
SD 0.6 x 3.5 x 100	for slotted screws	**9008330000**	1

Contact removal tool[3)]

for ConCept contacts

HDC-DW

M3/M5 M10 M20 M4

Type	for ConCept modules	Cat. No.	Qty.
HDC-DW-M3	HDC-CM-3	**1688240000**	1
HDC-DW-M5	HDC-CM-5	**1688230000**	1
HDC-DW-M10[1)]	HDC-CM-10	**1688220000**	1
HDC-DW-M20	HDC-CM-20	**1688210000**	1
HDC-DW-M4[2)]	HDC-CM-HE	**1760170000**	1

[1)] Tool for removal of turned HD contacts
[2)] Tool for removal of HE contacts
[3)] Please do not loosen the contact more than 3 times

Module removal tool

for ConCept modules

HDC-DW-MOD

Type	Description	Cat. No.	Qty.
HDC-DW-MOD[4)]	Module removal tool	**1688200000**	1

[4)] Tool for removal of ConCept modules from frames. Not necessary for HE modules.

Frames Group Size 3

Frames CR 6 / 2 modules

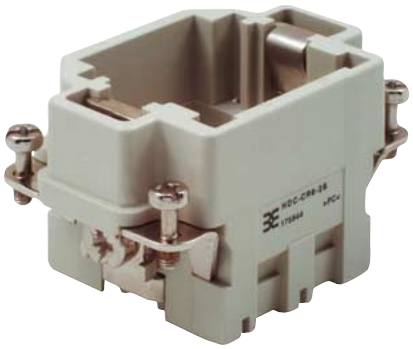

Male frame

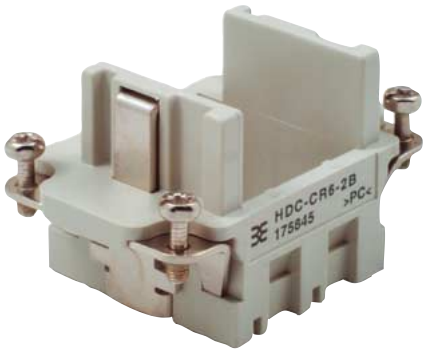

Female frame

Dimensions

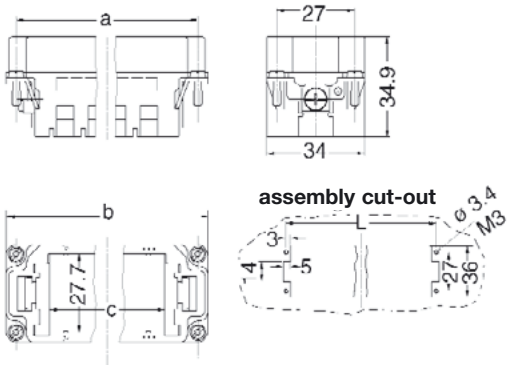

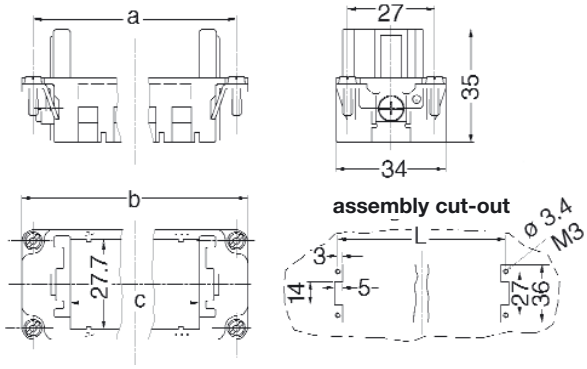

Colour		Black	Grey						
Version	Type	Cat. No.	Cat. No.	Qty.	a (mm)	b (mm)	c (mm)	L (mm)	Remarks	Group size
Male	HDC-CR6-2S	**1682180000**	**1758440000**	5	44	51	23	44	for 2 modules	**3**
Female	HDC-CR6-2B	**1682190000**	**1758450000**	5	44	51	23	44	for 2 modules	**3**

For accessories see section “Accessories”

Housings Group Size 3

Plug hood HB-6

End locking lower side

TOVL

Dimensions

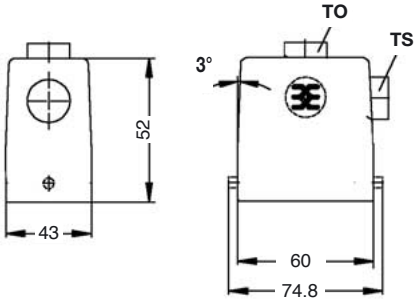

Version	Type	Cat. No.	Qty.
Standard housings, metric thread			
1 x M 20 thread	HDC HB6 TOVL 1xM20G	**1788120000**	5
1 x M 25 thread	HDC HB6 TOVL 1xM25G	**1788110000**	5
1 x M 20 thread	HDC HB6 TSVL 1xM20G	**1805930000**	5
1 x M 20 sleeve	HDC HB6 TSVL 1xM20	**1788100000**	5
1 x M 25 sleeve	HDC HB6 TSVL 1xM25	**1788090000**	5
Standard housings, PG thread			
1 x Pg13 complete	HDC-HB-6-TOVL1/13P	**1201800000**	5
1 x Pg13 sleeve	HDC-HB-6-TOVL1/13	**1670500000**	5
1 x Pg16 complete	HDC-HB-6-TOVL1/16P	**1652630000**	5
1 x Pg16 sleeve	HDC-HB-6-TOVL1/16	**1652640000**	5
1 x Pg13 complete	HDC-HB-6-TSVL1/13P	**1201900000**	5
1 x Pg13 sleeve	HDC-HB-6-TSVL1/13	**1670530000**	5
1 x Pg16 complete	HDC-HB-6-TSVL1/16P	**1652510000**	5
1 x Pg16 sleeve	HDC-HB-6-TSVL1/16	**1652520000**	5

TOVL = Plug hood; Top cable entry, end locking
TSVL = Plug hood; Side cable entry, end locking

Plug hood HBD-16

End locking lower side / high version

TOVL

Dimensions

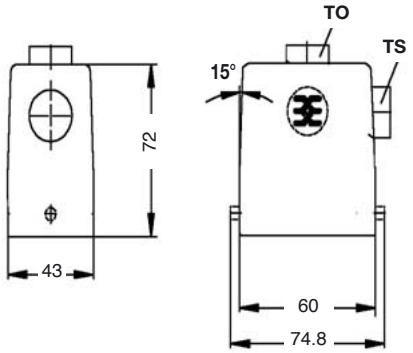

Version	Type	Cat. No.	Qty.
Standard housings, metric thread			
1 x M 25 thread	HDC HBD16 TOVL 1xM25G	**1787500000**	5
1 x M 32 thread	HDC HBD16 TOVL 1xM32G	**1787490000**	5
1 x M 25 thread	HDC HBD16 TSVL 1xM25G	**1787480000**	5
1 x M 32 thread	HDC HBD16 TSVL 1xM32G	**1787470000**	5
Standard housings, PG thread			
1 x Pg21 complete	HDC-HBD-16-TOVL1/21P	**1652670000**	5
1 x Pg21 sleeve	HDC-HBD-16-TOVL1/21	**1652680000**	5
1 x Pg29 complete	HDC-HBD-16-TOVL1/29P	**1652690000**	5
1 x Pg29 sleeve	HDC-HBD-16-TOVL1/29	**1652700000**	5
1 x Pg21 complete	HDC-HBD-16-TSVL1/21P	**1652550000**	5
1 x Pg21 sleeve	HDC-HBD-16-TSVL1/21	**1652560000**	5
1 x Pg29 complete	HDC-HBD-16-TSVL1/29P	**1652570000**	5
1 x Pg29 sleeve	HDC-HBD-16-TSVL1/29	**1652580000**	5

TOVL = Plug hood; Top cable entry, end locking
TSVL = Plug hood; Side cable entry, end locking

Base housing HB-6

End locking, with/without cover

SVL

SDVL

Dimensions

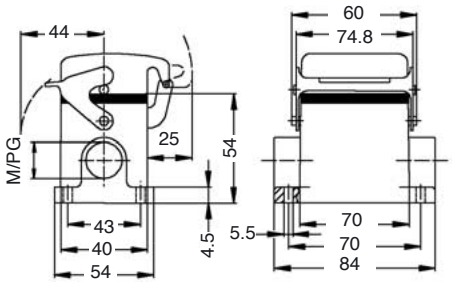

Version	Type	Cat. No.	Qty.
Standard housings, metric thread			
2 x M 20 thread	HDC HB6 SVL 2xM20G	**1788140000**	5
2 x M 25 thread	HDC HB6 SVL 2xM25G	**1788130000**	5
Standard housings with cover, metric thread			
2 x M 20 thread	HDC HB6 SDVL 2xM20G	**1788170000**	2
2 x M 25 thread	HDC HB6 SDVL 2xM25G	**1788160000**	2
Standard housings, PG thread			
1 x Pg16 complete	HDC-HB-6-SVL1/16P	**1202200000**	5
1 x Pg16 sleeve	HDC-HB-6-SVL1/16	**1652750000**	5
2 x Pg16 complete	HDC-HB-6-SVL2/16P	**1202300000**	5
2 x Pg16 sleeve	HDC-HB-6-SVL2/16	**1652760000**	5
Standard housings with cover, PG thread			
1 x Pg16 complete	HDC-HB-6-SDVL1/16P	**1202600000**	2
1 x Pg16 sleeve	HDC-HB-6-SDVL1/16	**1652980000**	2
2 x Pg16 complete	HDC-HB-6-SDVL2/16P	**1202700000**	2
2 x Pg16 sleeve	HDC-HB-6-SDVL2/16	**1652990000**	2

SVL = Base housing, end locking
SDVL = Base housing with cover, end locking

For accessories see section “Accessories”

Housings Group Size 3

Base housing HBD-16

End locking, with/without cover, high version

SVL

SDVL

Dimensions

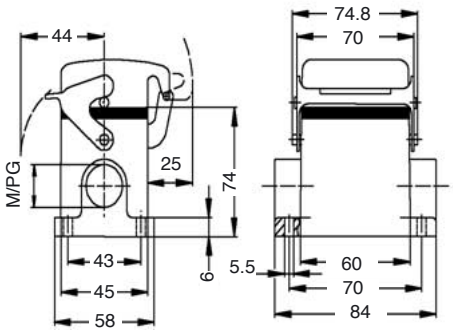

Version		Type	Cat. No.	Qty.
Standard housings, metric thread				
1 x M 20	sleeve	HDC HB10 TSVU 1xM20	**1787560000**	5
1 x M 25	sleeve	HDC HB10 TSVU 1xM25	**1787550000**	5
1 x M 20	thread	HDC HB10 TOVU 1xM20G	**1787600000**	5
1 x M 25	thread	HDC HB10 TOVU 1xM25G	**1787590000**	5
Standard housings, PG thread				
1 x Pg16	complete	HDC-HB-10-TSVU1/16P	**1204800000**	5
1 x Pg16	sleeve	HDC-HB-10-TSVU1/16	**1654070000**	5
1 x Pg21	complete	HDC-HB-10-TSVU1/21P	**1654080000**	5
1 x Pg21	sleeve	HDC-HB-10-TSVU1/21	**1654090000**	5
1 x Pg16	complete	HDC-HB-10-TOVU1/16P	**1204700000**	5
1 x Pg16	sleeve	HDC-HB-10-TOVU1/16	**1654220000**	5
1 x Pg21	complete	HDC-HB-10-TOVU1/21P	**1654230000**	5
1 x Pg21	sleeve	HDC-HB-10-TOVU1/21	**1654240000**	5

TSVU = Plug hood; Side cable entry, side locking lower side

TOVU = Plug hood; Top cable entry, side locking lower side

Coupling hood HB-6 / HBD-16

End locking

KVL

KVL

Dimensions

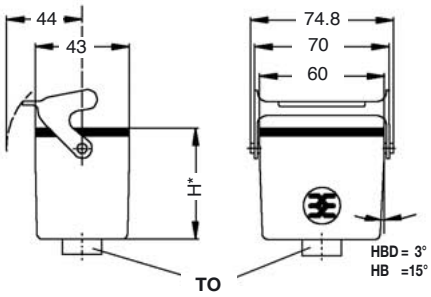

*HB = 54.8
HBD= 74.8

Version		Type	Cat. No.	Qty.
Standard housings, PG thread				
1 x Pg16	complete	HDC-HB-6-KVL1/16P	**1202400000**	5
1 x Pg16	sleeve	HDC-HB-6-KVL1/16	**1653200000**	5
1 x Pg21	complete	HDC-HBD-16-KVL1/21P	**1653230000**	5

KVL = Coupling hood, end locking

Bulkhead housing HB-6

End locking, with/without cover

AVL

ADVL

Dimensions

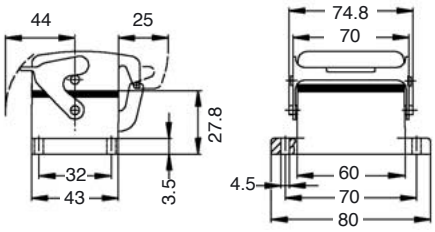

Version	Type	Cat. No.	Qty.
Standard housings			
	HDC-HB-6-AVL	**1202100000**	5
Standard housings with cover			
	HDC-HB-6-ADVL	**1202500000**	5

AVL = Bulkhead housing, end locking

ADVL = Bulkhead housing with cover, end locking

Cover for plug hood

Cover with cord

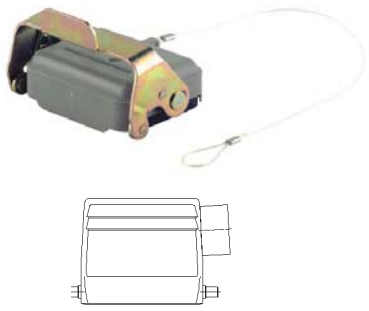

Type	Cat. No.	Qty.
Plastic cover		
HDC-HB-6-DT	**1665210000**	2

Cover for lower side with end locking

Cover with cord

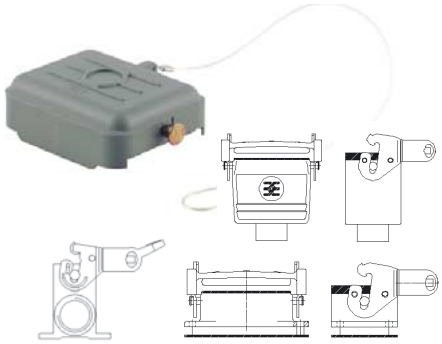

Type	Cat. No.	Qty.
Plastic cover		
HDC-HB-6-DB	**1665200000**	5

For accessories see section “Accessories”

Frames Group Size 4

Frames CR 10 / 3 modules

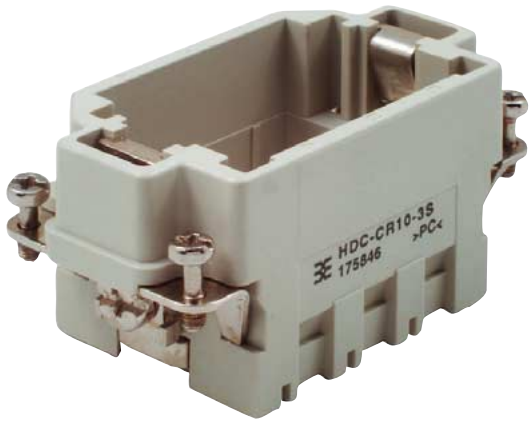

Male frame

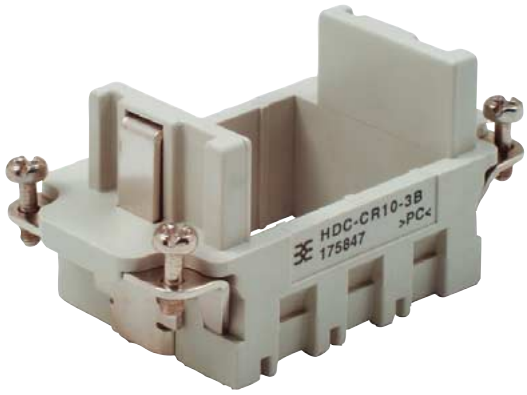

Female frame

Dimensions

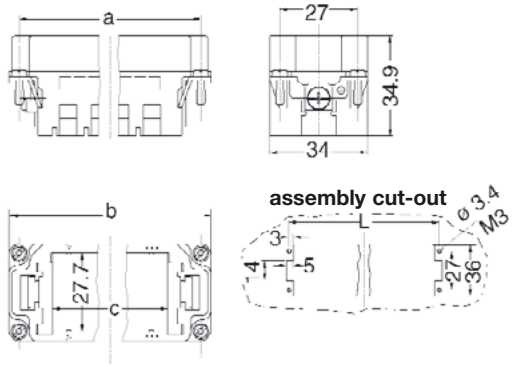

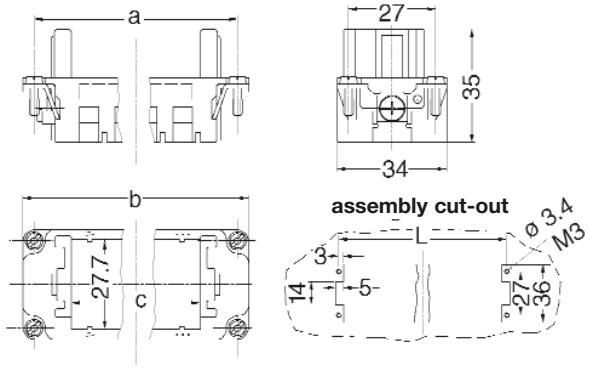

Colour		Black	Grey							
Version	Type	Cat. No.	Cat. No.	Qty.	a (mm)	b (mm)	c (mm)	L (mm)	Remarks	Group size
Male	HDC-CR10-3S	**1682200000**	**1758460000**	5	57	64	34.5	57	for 3 modules	**4**
Female	HDC-CR10-3B	**1682210000**	**1758470000**	5	57	64	34.5	57	for 3 modules	**4**

For accessories see section “Accessories”

Housings Group Size 4

Plug hood HB-10

Side locking lower side

TOVU

TSVU

Dimensions

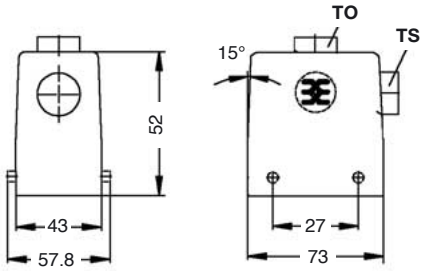

Version		Type	Cat. No.	Qty.
Standard housings, metric thread				
1 x M 20	thread	HDC HB10 TSVU 1xM20G	**1787560000**	5
1 x M 25	thread	HDC HB10 TSVU 1xM25G	**1787550000**	5
1 x M 20	thread	HDC HB10 TOVU 1xM20G	**1787600000**	5
1 x M 25	thread	HDC HB10 TOVU 1xM25G	**1787590000**	5
Standard housings, PG thread				
1 x Pg16	complete	HDC-HB-10-TSVU1/16P	**1204800000**	5
1 x Pg16	sleeve	HDC-HB-10-TSVU1/16	**1654070000**	5
1 x Pg21	complete	HDC-HB-10-TSVU1/21P	**1654080000**	5
1 x Pg21	sleeve	HDC-HB-10-TSVU1/21	**1654090000**	5
1 x Pg16	complete	HDC-HB-10-TOVU1/16P	**1204700000**	5
1 x Pg16	sleeve	HDC-HB-10-TOVU1/16	**1654220000**	5
1 x Pg21	complete	HDC-HB-10-TOVU1/21P	**1654230000**	5
1 x Pg21	sleeve	HDC-HB-10-TOVU1/21	**1654240000**	5

TSVU = Plug hood; Side cable entry, side locking lower side
TOVU = Plug hood; Top cable entry, side locking lower side

Plug hood HBD-24

Side locking lower side / high version

TOVU

TSVU

Dimensions

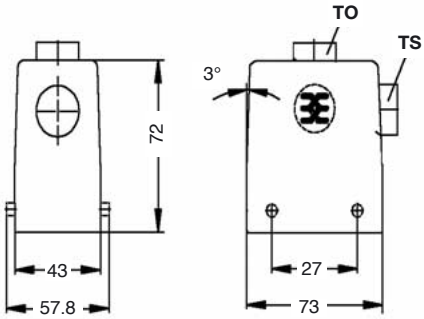

Version		Type	Cat. No.	Qty.
Standard housings, metric thread				
1 x M 25	thread	HDC HBD24 TSVU 1xM25G	**1787240000**	5
1 x M 32	thread	HDC HBD24 TSVU 1xM32G	**1787230000**	5
1 x M 25	thread	HDC HBD24 TOVU 1xM25G	**1787300000**	5
1 x M 32	thread	HDC HBD24 TOVU 1xM32G	**1787290000**	5
Standard housings, PG thread				
1 x Pg21	complete	HDC-HBD-24-TSVU1/21P	**1654140000**	5
1 x Pg21	sleeve	HDC-HBD-24-TSVU1/21	**1654150000**	5
1 x Pg29	complete	HDC-HBD-24-TSVU1/29P	**1654160000**	5
1 x Pg29	sleeve	HDC-HBD-24-TSVU1/29	**1654170000**	5
1 x Pg21	complete	HDC-HBD-24-TOVU1/21P	**1654290000**	5
1 x Pg29	complete	HDC-HBD-24-TOVU1/29P	**1654310000**	5

TSVU = Plug hood; Side cable entry, side locking lower side
TOVU = Plug hood; Top cable entry, side locking lower side

Base housing HB-10 / HBD-24

Side locking

SVU

SVU

Dimensions

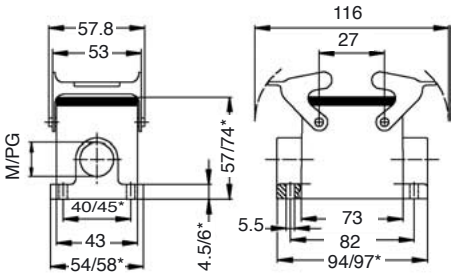

*HB/HBD

Version		Type	Cat. No.	Qty.
Standard housings, metric thread				
1 x M 20	thread	HDC HB10 SVU 2xM20G	**1787640000**	2
1 x M 25	thread	HDC HB10 SVU 2xM25G	**1787630000**	2
2 x M 25	thread	HDC HBD24 SVU 2xM25G	**1787350000**	2
2 x M 32	thread	HDC HBD24 SVU 2xM32G	**1787360000**	2
Standard housings, PG thread				
1 x Pg16	complete	HDC-HB-10-SVU1/16P	**1205100000**	2
1 x Pg16	sleeve	HDC-HB-10-SVU1/16	**1654370000**	2
2 x Pg16	complete	HDC-HB-10-SVU2/16P	**1205200000**	2
2 x Pg16	sleeve	HDC-HB-10-SVU2/16	**1654380000**	2
1 x Pg21	complete	HDC-HBD-24-SVU1/21P	**1654420000**	2
1 x Pg21	sleeve	HDC-HBD-24-SVU1/21	**1654430000**	2
1 x Pg29	sleeve	HDC-HBD-24-SVU1/29	**1654470000**	2
2 x Pg21	complete	HDC-HBD-24-SVU2/21P	**1654440000**	2
2 x Pg21	sleeve	HDC-HBD-24-SVU2/21	**1654450000**	2
2 x Pg29	complete	HDC-HBD-24-SVU2/29P	**1654480000**	2

SVU = Base housing, side locking

For accessories see section “Accessories”

Housings Group Size 4

Coupling hood HB-10 / HBD 24

Side locking

KVU

KVU

Dimensions

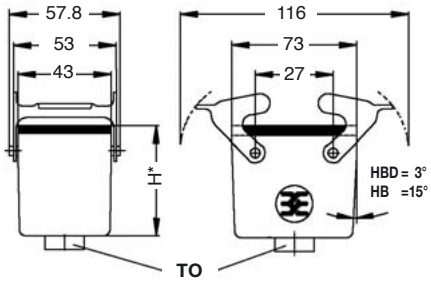

*HB = 54.8
HBD= 74.8

Version	Type	Cat. No.	Qty.
Standard housings, metric thread			
1 x M 20 thread	HDC HB10 KVU 1xM20G	**1787720000**	5
1 x M 25 thread	HDC HB10 KVU 1xM25G	**1787710000**	5
1 x M 25 thread	HDC HBD24 KVU 1xM25G	**1787440000**	2
1 x M 32 thread	HDC HBD24 KVU 1xM32G	**1787430000**	2
Standard housings, PG thread			
1 x Pg16 complete	HDC-HB-10-KVU1/16P	**1205300000**	5
1 x Pg16 sleeve	HDC-HB-10-KVU1/16	**1654580000**	5
1 x Pg21 complete	HDC-HB-10-KVU1/21P	**1654590000**	5
1 x Pg21 complete	HDC-HBD-24-KVU1/21P	**1654650000**	2
1 x Pg29 complete	HDC-HBD-24-KVU1/29P	**1654670000**	2

KVU = Coupling hood, side locking

Bulkhead housing HB-10

Side locking

AVU

Dimensions

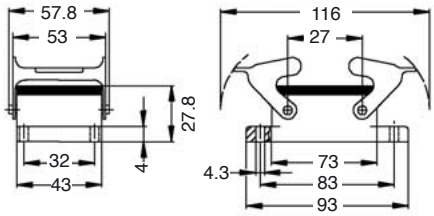

Version	Type	Cat. No.	Qty.
Standard housings			
	HDC-HB-10-AVU	**1205000000**	5

AVU = Bulkhead housing, side locking

Plug hood HB-10 / HBD-24

Side locking

TSVO

TSVO

Dimensions

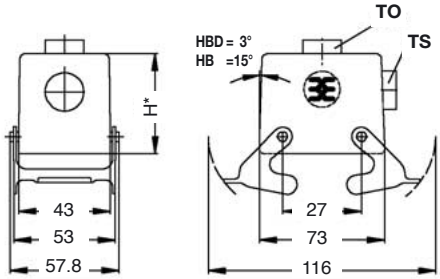

*HB = 52
HBD= 72

Version	Type	Cat. No.	Qty.
Standard housings, metric thread			
1 x M 25 sleeve	HDC HB10 TSVO 1xM25	**1787570000**	5
1 x M 25 thread	HDC HB10 TOVO 1xM25G	**1787610000**	5
1 x M 25 thread	HDC HBD24 TSVO 1xM25G	**1787260000**	2
1 x M 32 thread	HDC HBD24 TSVO 1xM32G	**1787250000**	2
1 x M 25 thread	HDC HBD24 TOVO 1xM25G	**1787320000**	2
1 x M 32 thread	HDC HBD24 TOVO 1xM32G	**1787310000**	2
Standard housings, PG thread			
1 x Pg16 complete	HDC-HB-10-TSVO1/16P	**1205500000**	5
1 x Pg16 sleeve	HDC-HB-10-TSVO1/16	**1654750000**	5
1 x Pg16 complete	HDC-HB-10-TOVO1/16P	**1205400000**	5
1 x Pg16 sleeve	HDC-HB-10-TOVO1/16	**1654860000**	5
1 x Pg21 sleeve	HDC-HBD-24-TSVO1/21	**1654790000**	2
1 x Pg29 complete	HDC-HBD-24-TSVO1/29P	**1654800000**	2
1 x Pg29 sleeve	HDC-HBD-24-TSVO1/29	**1654810000**	2
1 x Pg21 complete	HDC-HBD-24-TOVO1/21P	**1654890000**	2
1 x Pg29 complete	HDC-HBD-24-TOVO1/29P	**1654910000**	2
1 x Pg29 sleeve	HDC-HBD-24-TOVO1/29	**1654920000**	2

TSVO = Plug hood; Side cable entry, side locking
TOVO = Plug hood; Top cable entry, side locking

Cover for plug hood

Cover with cord

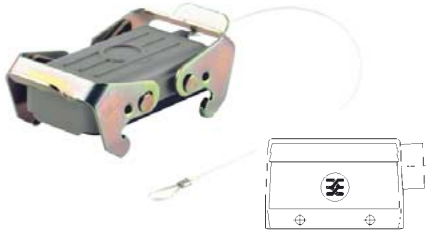

Type	Cat. No.	Qty.
Plastic cover		
HDC-HB-10-DT	**1665240000**	2

Cover for lower side with side locking

Cover with cord

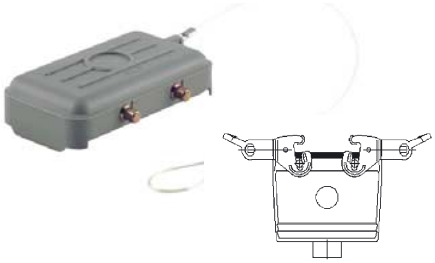

Type	Cat. No.	Qty.
Plastic cover		
HDC-HB-10-DB	**1665230000**	5

For accessories see section “Accessories”

Housings Group Size 4

Base housing HB-10 / HBD-24

Side locking upper side

SDVO

Dimensions

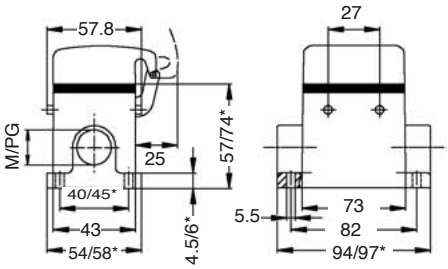

*HB/HBD

Version		Type	Cat. No.	Qty.
Standard housings with cover, metric thread				
1 x M 20	thread	HDC HB10 SDVO 2xM20G	**1787680000**	2
1 x M 25	thread	HDC HB10 SDVO 2xM25G	**1787670000**	2
1 x M 25	thread	HDC HBD24 SDVO 2xM25G	**1787400000**	1
1 x M 32	thread	HDC HBD24 SDVO 2xM32G	**1787390000**	1
Standard housings with cover, PG thread				
1 x Pg16	complete	HDC-HB-10-SDVO1/16P	**1205700000**	2
1 x Pg16	sleeve	HDC-HB-10-SDVO1/16	**1654990000**	2
2 x Pg16	complete	HDC-HB-10-SDVO2/16P	**1205800000**	2
2 x Pg16	sleeve	HDC-HB-10-SDVO2/16	**1655000000**	2
1 x Pg21	complete	HDC-HBD-24-SDVO1/21P	**1655050000**	1
1 x Pg29	complete	HDC-HBD-24-SDVO1/29P	**1655090000**	1
2 x Pg29	complete	HDC-HBD-24-SDVO2/29P	**1655110000**	1

SDVO = Base housing with cover, side locking upper side

Bulkhead housing HB-10

With cover / side locking upper side

ADVO

Dimensions

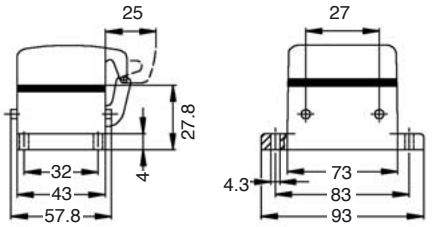

Version	Type	Cat. No.	Qty.
Standard housings with cover			
	HDC-HB-10-ADVO	**1205600000**	5

ADVO = Bulkhead housing with cover, Side locking upper side

Cover for plug hood with side locking

Cover with cord

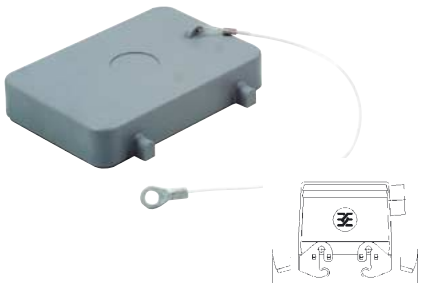

Type	Cat. No.	Qty.
Plastic cover		
HDC-HB-10-DBP	**1665250000**	5

Plug hood HB-10 / HBD-24

End locking lower side

TOVL

TOVL

Dimensions

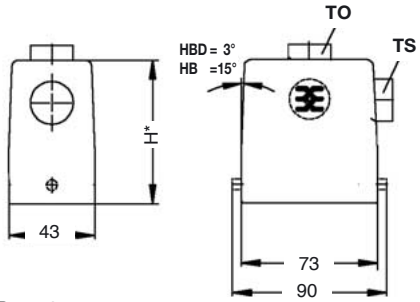

*HB = 52
HBD= 72

Version		Type	Cat. No.	Qty.
Standard housings, metric thread				
1 x M 25	sleeve	HDC HB10 TSVL 1xM25	**1787580000**	5
1 x M 25	thread	HDC HB10 TOVL 1xM25G	**1787620000**	5
1 x M 25	thread	HDC HBD24 TSVL 1xM25G	**1787280000**	2
1 x M 32	thread	HDC HBD24 TSVL 1xM32G	**1787270000**	2
1 x M 25	thread	HDC HBD24 TOVL 1xM25G	**1787340000**	2
1 x M 32	thread	HDC HBD24 TOVL 1xM32G	**1787330000**	2
Standard housings, PG thread				
1 x Pg16	complete	HDC-HB-10-TSVL1/16P	**1206000000**	5
1 x Pg16	sleeve	HDC-HB-10-TSVL1/16	**1655210000**	5
1 x Pg16	complete	HDC-HB-10-TOVL1/16P	**1205900000**	5
1 x Pg16	sleeve	HDC-HB-10-TOVL1/16	**1655320000**	5
1 x Pg21	complete	HDC-HBD-24-TSVL1/21P	**1655240000**	2
1 x Pg21	sleeve	HDC-HBD-24-TSVL1/21	**1655250000**	2
1 x Pg29	complete	HDC-HBD-24-TSVL1/29P	**1655260000**	2
1 x Pg29	sleeve	HDC-HBD-24-TSVL1/29	**1655270000**	2
1 x Pg21	complete	HDC-HBD-24-TOVL1/21P	**1655350000**	2
1 x Pg21	sleeve	HDC-HBD-24-TOVL1/21	**1655360000**	2
1 x Pg29	complete	HDC-HBD-24-TOVL1/29P	**1655370000**	2
1 x Pg29	sleeve	HDC-HBD-24-TOVL1/29	**1655380000**	2

TSVL = Plug hood; Side cable entry, end locking
TOVL = Plug hood; Top cable entry, end locking

For accessories see section “Accessories”

Housings Group Size 4

Base housing HB-10 / HBD-24

End locking, with/without cover

SVL

SDVL

Dimensions

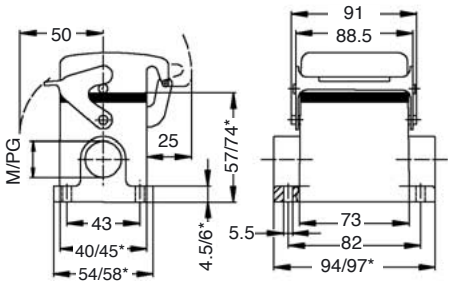

*HB/HBG

Coupling hood HB-10 / HBD-24

End locking

KVL

KVL

Dimensions

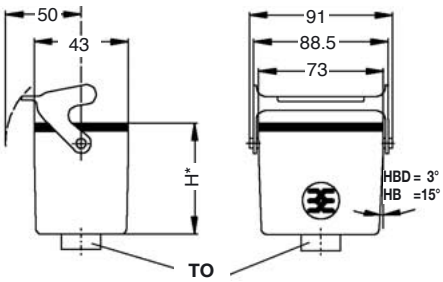

*HB = 54.8
HBD= 74.8

Bulkhead housing HB-10

End locking, with/without cover

AVL

ADVL

Dimensions

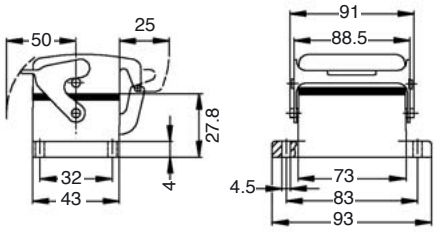

Version	Type	Cat. No.	Qty.
Standard housings, metric thread			
2 x M 20 thread	HDC HB10 SVL 2xM20G	**1787660000**	2
2 x M 25 thread	HDC HB10 SVL 2xM25G	**1787650000**	2
2 x M 25 thread	HDC HBD24 SVL 2xM25G	**1787380000**	2
2 x M 32 thread	HDC HBD24 SVL 2xM32G	**1787370000**	2
Standard housings with cover, metric thread			
2 x M 20 thread	HDC HB10 SDVL 2xM20G	**1787700000**	2
2 x M 25 thread	HDC HB10 SDVL 2xM25G	**1787690000**	2
1 x M 25 thread	HDC HBD24 SDVL 1xM25G	**1787420000**	1
1 x M 32 thread	HDC HBD24 SDVL 1xM32G	**1787410000**	1
Standard housings, PG thread			
1 x Pg16 complete	HDC-HB-10-SVL1/16P	**1206200000**	2
1 x Pg16 sleeve	HDC-HB-10-SVL1/16	**1655460000**	2
2 x Pg16 complete	HDC-HB-10-SVL2/16P	**1206300000**	2
2 x Pg16 sleeve	HDC-HB-10-SVL2/16	**1655470000**	2
1 x Pg21 complete	HDC-HBD-24-SVL1/21P	**1655510000**	2
1 x Pg29 complete	HDC-HBD-24-SVL1/29P	**1655550000**	2
Standard housings with cover, PG thread			
1 x Pg16 complete	HDC-HB-10-SDVL1/16P	**1206600000**	2
1 x Pg16 sleeve	HDC-HB-10-SDVL1/16	**1655670000**	2
2 x Pg16 complete	HDC-HB-10-SDVL2/16P	**1206700000**	1
2 x Pg16 sleeve	HDC-HB-10-SDVL2/16	**1655680000**	1
1 x Pg21 complete	HDC-HBD-24-SDVL1/21P	**1655720000**	1

SVL = Base housing, end locking
SDVL = Base housing with cover, end locking

Version	Type	Cat. No.	Qty.
Standard housings, metric thread			
1 x M 20 thread	HDC HB10 KVL 1xM20G	**1787740000**	5
1 x M 25 thread	HDC HB10 KVL 1xM25G	**1787730000**	2
1 x M 25 thread	HDC HBD24 KVL 1xM25G	**1787460000**	2
1 x M 32 thread	HDC HBD24 KVL 1xM32G	**1787450000**	2
Standard housings, PG thread			
1 x Pg16 complete	HDC-HB-10-KVL1/16P	**1655880000**	5
1 x Pg16 sleeve	HDC-HB-10-KVL1/16	**1655890000**	5
1 x Pg21 complete	HDC-HB-10-KVL1/21P	**1655900000**	2

KVL = Coupling hood, end locking

Version	Type	Cat. No.	Qty.
Standard housings			
	HDC-HB-10-AVL	**1206100000**	5
Standard housings with cover			
	HDC-HB-10-ADVL	**1206500000**	2

AVL = Bulkhead housing, end locking
ADVL = Bulkhead housing with cover, end locking

For accessories see section “Accessories”

Frames Group Size 6

Frames CR 16 / 5 Modules

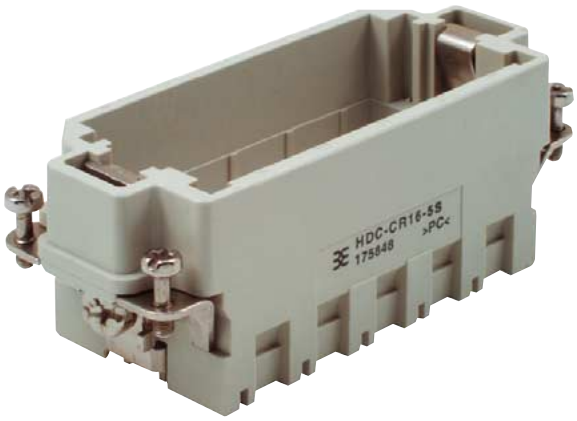

Male frame

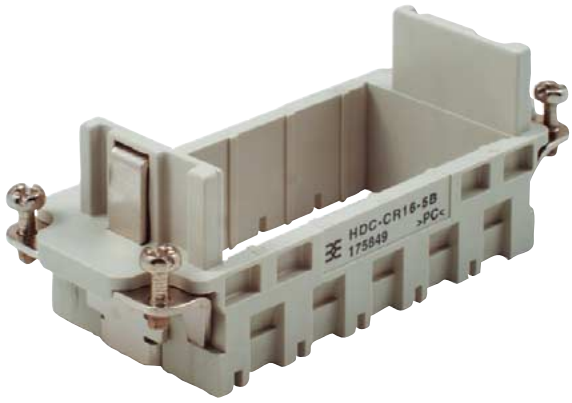

Female frame

Dimensions

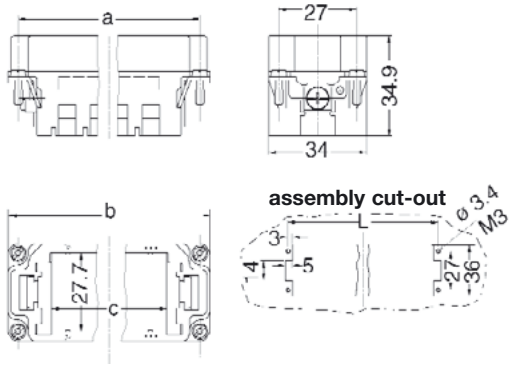

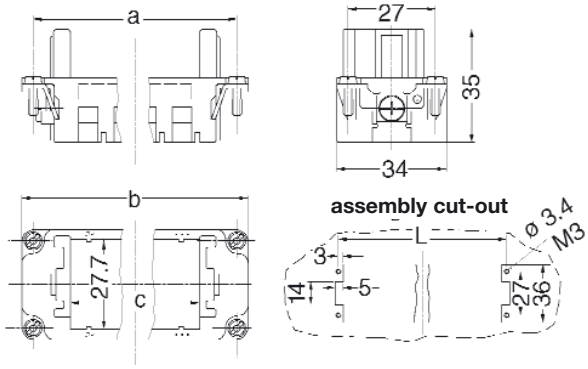

Colour		Black	Grey						
Version	Type	Cat. No.	Cat. No.	Qty.	a (mm)	b (mm)	c (mm)	L (mm)	Remarks	Group size
Male	HDC-CR16-5S	**1682220000**	**1758480000**	5	77.5	84.5	57.5	77.5	For 5 modules	**6 (10)**
Female	HDC-CR16-5B	**1682230000**	**1758490000**	5	77.5	84.5	57.5	77.5	For 5 modules	**6 (10)**
Male [1]	HDC-CR16-5S-2		**1758520000**	5	77.5	84.5	57.5	77.5	For 5 modules	**10**
Female [1]	HDC-CR16-5B-2		**1758530000**	5	77.5	84.5	57.5	77.5	For 5 modules	**10**

[1] addition marrkings for the use of two frames in one housing.
2 frames = groupe size 10.

For accessories see section “Accessories”

Housings Group Size 6

Plug hood HB-16 / HBD-40

Side locking lower side

TSVU

TOVU

Dimensions

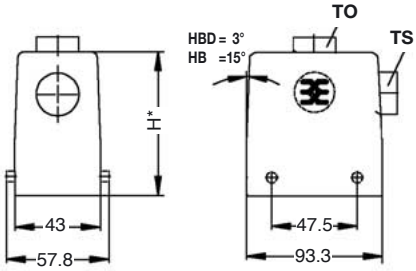

*HB = 61
HBD= 76

Version		Type	Cat. No.	Qty.
Standard housings, metric thread				
1 x M 25	sleeve	HDC HB16 TSVU 1xM25	**1788180000**	5
1 x M 25	thread	HDC HB16 TOVU 1xM25G	**1788210000**	5
1 x M 25	thread	HDC HBD40 TSVU 1xM25G	**1787010000**	5
1 x M 32	thread	HDC HBD40 TSVU 1xM32G	**1787000000**	5
1 x M 25	thread	HDC HBD40 TOVU 1xM25G	**1787070000**	5
1 x M 32	thread	HDC HBD40 TOVU 1xM32G	**1787060000**	5
Standard housings, PG thread				
1 x Pg21	complete	HDC-HB-16-TSVU1/21P	**1208400000**	5
1 x Pg21	sleeve	HDC-HB-16-TSVU1/21	**1656480000**	5
1 x Pg21	complete	HDC-HB-16-TOVU1/21P	**1208300000**	5
1 x Pg21	sleeve	HDC-HB-16-TOVU1/21	**1656590000**	5
1 x Pg21	complete	HDC-HBD-40-TSVU1/21P	**1656510000**	5
1 x Pg21	sleeve	HDC-HBD-40-TSVU1/21	**1656520000**	5
1 x Pg29	complete	HDC-HBD-40-TSVU1/29P	**1656530000**	5
1 x Pg29	sleeve	HDC-HBD-40-TSVU1/29	**1656540000**	5
1 x Pg21	complete	HDC-HBD-40-TOVU1/21P	**1656620000**	5
1 x Pg21	sleeve	HDC-HBD-40-TOVU1/21	**1656630000**	5
1 x Pg29	complete	HDC-HBD-40-TOVU1/29P	**1656640000**	5
1 x Pg29	sleeve	HDC-HBD-40-TOVU1/29	**1656650000**	5

TOVU = Plug hood; Top cable entry, side locking lower side
TSVU = Plug hood; Side cable entry, side locking lower side

Base housing HB-16 / HBD-40

Side locking

SVU

Dimensions

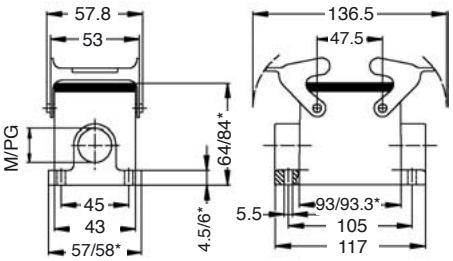

*HB/HBD

Version		Type	Cat. No.	Qty.
Standard housings, metric thread				
1 x M 25	thread	HDC HB16 SVU 2xM25G	**1788240000**	2
2 x M 25	thread	HDC HBD40 SVU 2xM25G	**1787120000**	2
2 x M 32	thread	HDC HBD40 SVU 2xM32G	**1787110000**	2
Standard housings, PG thread				
1 x Pg21	complete	HDC-HB-16-SVU1/21P	**1208700000**	2
1 x Pg21	sleeve	HDC-HB-16-SVU1/21	**1656720000**	2
2 x Pg21	complete	HDC-HB-16-SVU2/21P	**1208800000**	2
2 x Pg21	sleeve	HDC-HB-16-SVU2/21	**1656730000**	2
1 x Pg21	sleeve	HDC-HBD-40-SVU1/21	**1656790000**	2
1 x Pg29	complete	HDC-HBD-40-SVU1/29P	**1656820000**	2
2 x Pg21	complete	HDC-HBD-40-SVU2/21P	**1656800000**	2
2 x Pg21	sleeve	HDC-HBD-40-SVU2/21	**1656810000**	2
2 x Pg29	complete	HDC-HBD-40-SVU2/29P	**1656840000**	2

SVU = Base housing, side locking lower side

Coupling hood HB-16 / HBD-40

Side locking

KVU

Dimensions

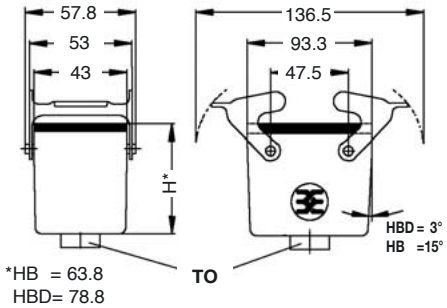

*HB = 63.8
HBD= 78.8

Version		Type	Cat. No.	Qty.
Standard housings, metric thread				
1 x M 25	thread	HDC HBD40 KVU 1xM25G	**1787200000**	2
1 x M 32	thread	HDC HBD40 KVU 1xM32G	**1787190000**	2
1 x M 25	thread	HDC HB16 KVU 1xM25G	**1788280000**	2
Standard housings, PG thread				
1 x Pg21	complete	HDC-HB-16-KVU1/21P	**1208900000**	2
1 x Pg21	sleeve	HDC-HB-16-KVU1/21	**1657270000**	2
1 x Pg21	complete	HDC-HBD-40-KVU1/21P	**1657300000**	2
1 x Pg21	sleeve	HDC-HBD-40-KVU1/21	**1657310000**	2
1 x Pg29	complete	HDC-HBD-40-KVU1/29P	**1657320000**	2

KVU = Coupling hood, side locking

Cover for plug hood

Cover with cord

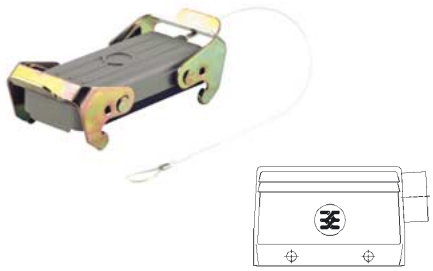

Type	Cat. No.	Qty.
Plastic cover		
HDC-HB-16-DT	**1665270000**	2

For accessories see section “Accessories”

Housings Group Size 6

Bulkhead housing HB-16

Side locking

AVU

Dimensions

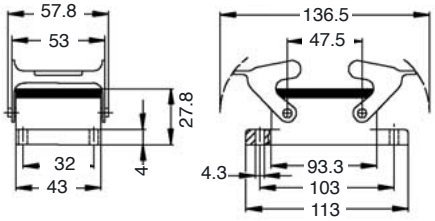

Version	Type	Cat. No.	Qty.
Standard housings			
	HDC-HB-16-AVU	**1208600000**	5

AVU = Bulkhead housing, side locking

Cover for lower side with side locking

Cover with cord

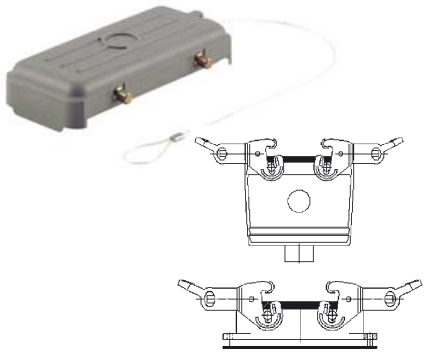

Type	Cat. No.	Qty.
Plastic cover		
HDC-HB-16-DB	**1665260000**	2

Plug hood HB-16 / HBD-40

Side locking

TSVO

TOVO

Dimensions

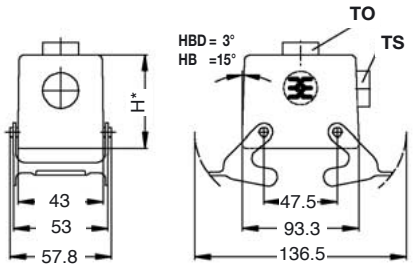

*HB = 61
HBD= 76

Version	Type	Cat. No.	Qty.
Standard housings, metric thread			
1 x M 25 sleeve	HDC HB16 TSVO 1xM25	**1788190000**	2
1 x M 25 thread	HDC HB16 TOVO 1xM25G	**1788220000**	2
1 x M 25 thread	HDC HBD40 TSVO 1xM25G	**1787030000**	2
1 x M 32 thread	HDC HBD40 TSVO 1xM32G	**1787020000**	2
1 x M 25 thread	HDC HBD40 TOVO 1xM25G	**1787090000**	2
1 x M 32 thread	HDC HBD40 TOVO 1xM32G	**1787080000**	2
Standard housings, PG thread			
1 x Pg21 complete	HDC-HB-16-TSVO1/21P	**1209100000**	2
1 x Pg21 sleeve	HDC-HB-16-TSVO1/21	**1657380000**	2
1 x Pg21 complete	HDC-HB-16-TOVO1/21P	**1209000000**	2
1 x Pg21 sleeve	HDC-HB-16-TOVO1/21	**1657490000**	2
1 x Pg21 complete	HDC-HBD-40-TSVO1/21P	**1657410000**	2
1 x Pg21 sleeve	HDC-HBD-40-TSVO1/21	**1657420000**	2
1 x Pg29 complete	HDC-HBD-40-TSVO1/29P	**1657430000**	2
1 x Pg21 complete	HDC-HBD-40-TOVO1/21P	**1657520000**	2
1 x Pg29 complete	HDC-HBD-40-TOVO1/29P	**1657540000**	2
1 x Pg29 sleeve	HDC-HBD-40-TOVO1/29	**1657550000**	2

TSVO = Plug hood; Side cable entry, side locking
TOVO = Plug hood; Top cable entry, side locking

Base housing HB-16 / HBD-40

Side locking upper side

SDVO

Dimensions

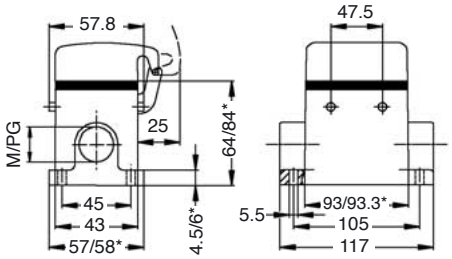

Version	Type	Cat. No.	Qty.
Standard housings with cover, metric thread			
2 x M 25 thread	HDC HB16 SDVO 2xM25G	**1788260000**	2
2 x M 25 thread	HDC HBD40 SDVO 2xM25G	**1787160000**	2
2 x M 32 thread	HDC HBD40 SDVO 2xM32G	**1787150000**	2
Standard housings with cover, PG thread			
1 x Pg21 complete	HDC-HB-16-SDVO1/21P	**1209300000**	2
2 x Pg21 complete	HDC-HB-16-SDVO2/21P	**1209400000**	2
2 x Pg21 sleeve	HDC-HB-16-SDVO2/21	**1657640000**	2
1 x Pg21 complete	HDC-HBD-40-SDVO1/21P	**1657690000**	2
1 x Pg21 sleeve	HDC-HBD-40-SDVO1/21	**1657700000**	2
2 x Pg21 complete	HDC-HBD-40-SDVO2/21P	**1657710000**	2

SDVO = Base housing with cover, side locking upper side

For accessories see section “Accessories”

Housings Group Size 6

Bulkhead housing HB-16

Side locking upper side

ADVO

Dimensions

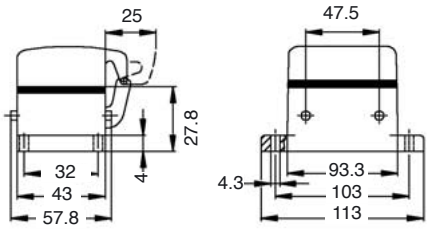

Version	Type	Cat. No.	Qty.
Standard housings			
	HDC-HB-16-ADVO	**1209200000**	2

ADVL = Bulkhead housing with cover, side locking

Cover for plug hood with side locking

Cover with cord

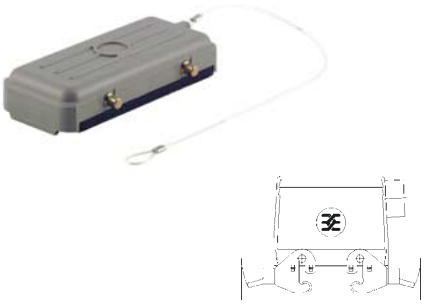

Type	Cat. No.	Qty.
Plastic cover		
HDC-HB-16-DBP	**1665620000**	5

Plug hood HB-16 / HBD-40

End locking lower side / high version

TOVL

TSVL

Dimensions

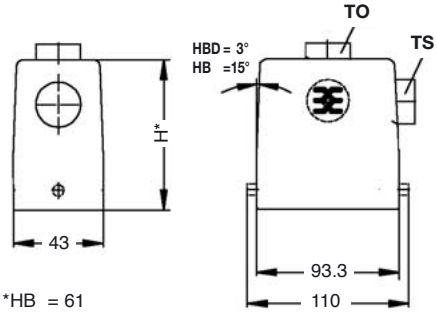

*HB = 61
HBD= 76

Version	Type	Cat. No.	Qty.
Standard housings, metric thread			
1 x M 25 sleeve	HDC HB16 TSVL 1xM25	**1788200000**	5
1 x M 25 thread	HDC HB16 TOVL 1xM25G	**1788230000**	5
1 x M 32 thread	HDC HB16 TSVL 1xM32G	**1804640000**	5
1 x M 32 thread	HDC HB16 TOVL 1xM32G	**1804630000**	5
1 x M 25 thread	HDC HBD40 TSVL 1xM25G	**1787050000**	5
1 x M 32 thread	HDC HBD40 TSVL 1xM32G	**1787040000**	5
1 x M 32 thread	HDC HBD40 TOVL 1xM32G	**1787100000**	5
Standard housings, PG thread			
1 x Pg21 complete	HDC-HB-16-TSVL1/21P	**1209600000**	5
1 x Pg21 sleeve	HDC-HB-16-TSVL1/21	**1657850000**	5
1 x Pg21 complete	HDC-HB-16-TOVL1/21P	**1209500000**	5
1 x Pg21 sleeve	HDC-HB-16-TOVL1/21	**1657960000**	5
1 x Pg21 complete	HDC-HBD-40-TSVL1/21P	**1657880000**	5
1 x Pg21 sleeve	HDC-HBD-40-TSVL1/21	**1657890000**	5
1 x Pg29 complete	HDC-HBD-40-TSVL1/29P	**1657900000**	5
1 x Pg29 sleeve	HDC-HBD-40-TSVL1/29	**1657910000**	5
1 x Pg21 complete	HDC-HBD-40-TOVL1/21P	**1657990000**	5
1 x Pg21 sleeve	HDC-HBD-40-TOVL1/21	**1658000000**	5
1 x Pg29 complete	HDC-HBD-40-TOVL1/29P	**1658010000**	5
1 x Pg29 sleeve	HDC-HBD-40-TOVL1/29	**1658020000**	5

TSVL = Plug hood; Side cable entry, end locking lower side

TOVL = Plug hood; Top cable entry, end locking lower side

Base housing HB-16 / HBD-40

End locking with/without cover

SVL

SDVL

Dimensions

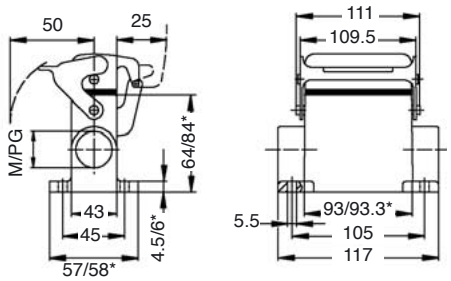

*HB/HBD

Version	Type	Cat. No.	Qty.
Standard housings, metric thread			
2 x M 25 thread	HDC HB16 SVL 2xM25G	**1788250000**	2
2 x M 25 thread	HDC HBD40 SVL 2xM25G	**1787140000**	2
2 x M 32 thread	HDC HBD40 SVL 1xM32G	**1804660000**	2
2 x M 32 thread	HDC HBD40 SVL 2xM32G	**1787130000**	2
2 x M 25 thread	HDC HB16 SDVL 2xM25G	**1788270000**	2
2 x M 25 thread	HDC HBD40 SDVL 2xM25G	**1787180000**	2
2 x M 32 thread	HDC HBD40 SDVL 2xM32G	**1787170000**	2
Standard housings, PG- thread			
1 x Pg21 complete	HDC-HB-16-SVL1/21P	**1209800000**	2
1 x Pg21 sleeve	HDC-HB-16-SVL1/21	**1658110000**	2
2 x Pg21 complete	HDC-HB-16-SVL2/21P	**1209900000**	2
2 x Pg21 sleeve	HDC-HB-16-SVL2/21	**1658120000**	2
1 x Pg21 complete	HDC-HB-16-SDVL1/21P	**1210200000**	2
1 x Pg21 sleeve	HDC-HB-16-SDVL1/21	**1658320000**	2
2 x Pg21 complete	HDC-HB-16-SDVL2/21P	**1210300000**	2
2 x Pg21 sleeve	HDC-HB-16-SDVL2/21	**1658330000**	2
1 x Pg21 complete	HDC-HBD-40-SDVL1/21P	**1658370000**	2
1 x Pg29 complete	HDC-HBD-40-SDVL1/29P	**1658410000**	2
2 x Pg29 complete	HDC-HBD-40-SDVL2/29P	**1658430000**	2

SVL = Base housing, end locking

SDVL = Base housing with cover, end locking

For accessories see section “Accessories”

Housings Group Size 6

Coupling hood HB-16 / HBD-40

End locking

KVL

Dimensions

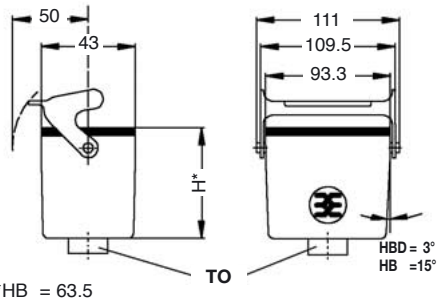

*HB = 63.5
HBD= 78.5

Version	Type	Cat. No.	Qty.
Standard housings, metric thread			
1 x M 25 thread	HDC HB16 KVL 1xM25G	**1788290000**	2
1 x M 25 thread	HDC HBD40 KVL 1xM25G	**1787220000**	2
1 x M 32 thread	HDC HBD40 KVL 1xM32G	**1787210000**	2
Standard housings, PG thread			
1 x Pg21 complete	HDC-HB-16-KVL1/21P	**1210000000**	2
1 x Pg29 complete	HDC-HBD-40-KVL1/29P	**1658580000**	2

KVL = Coupling hood, end locking

Bulkhead housing HB-16

End locking

AVL

ADVL

Dimensions

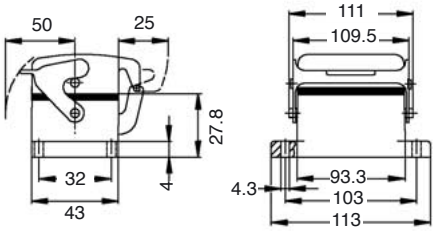

Version	Type	Cat. No.	Qty.
Standard housings			
	HDC-HB-16-AVL	**1209700000**	5
Standard housings with cover			
	HDC-HB-16-ADVL	**1210100000**	2

AVL = Bulkhead housing, end locking
ADVL = Bulkhead housing with cover, end locking

For accessories see section “Accessories”

Housings Group Size 6

Plug hood HBD-40

Centre locking

TSVZ

Dimensions

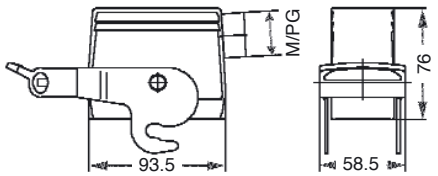

Version	Type	Cat. No.	Qty.
Standard housings, PG thread			
1 x Pg21	complete HDC-HBD-40-TSVZ1/21P	**1658680000**	2

TSVZ = Plug hood; Side cable entry, centre locking

Base housing HB-16 / HBD-40

Centre locking upper side

SVZ

Dimensions

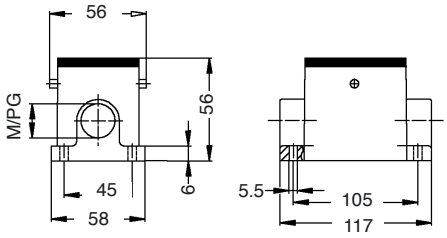

Version	Type	Cat. No.	Qty.
Standard housings, PG thread			
1 x Pg21	complete HDC-HB-16-SVZ1/21P	**1600610000**	2
1 x Pg21	sleeve HDC-HB-16-SVZ1/21	**1658860000**	2
2 x Pg21	complete HDC-HB-16-SVZ2/21P	**1658870000**	2

SVZ = Base housing, centre locking

Bulkhead housing HB-16

Centre locking upper side

AVZ

Dimensions

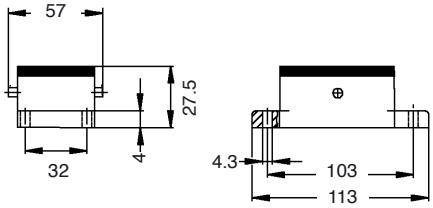

Version	Type	Cat. No.	Qty.
Standard housings			
	HDC-HB-16-AVZ	**1611360000**	2

AVZ = Bulkhead housing, centre locking

For accessories see section “Accessories”

Frames Group Size 8

Frames CR 24 / 7 modules

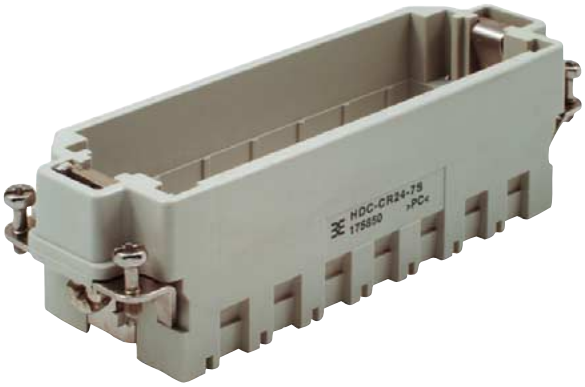

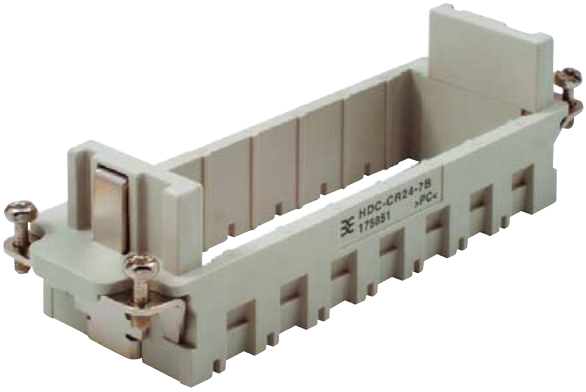

Male frame **Female frame**

Dimensions

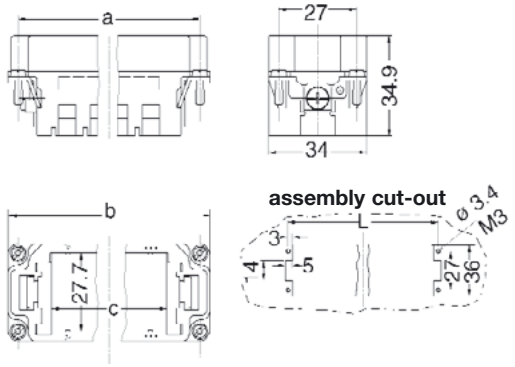

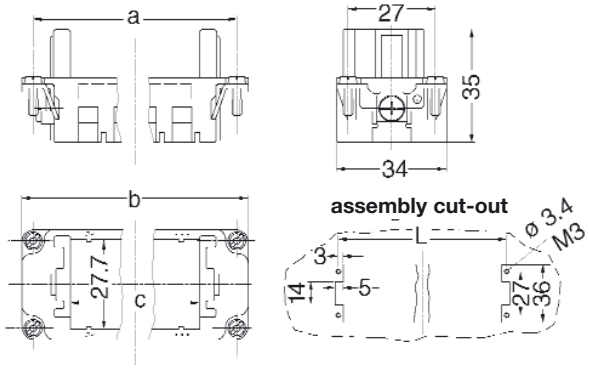

Colour		Black	Grey		a (mm)	b (mm)	c (mm)	L (mm)	Remarks	Group size
Version	Type	Cat. No.	Cat. No.	Qty.						
Male	HDC-CR24-7S	**1682240000**	**1758500000**	5	104	111	80.5	104	for 7 modules	**8 (12)**
Female	HDC-CR24-7B	**1682250000**	**1758510000**	5	104	111	80.5	104	for 7 modules	**8 (12)**
Male [2)]	HDC-CR24-7S-2		**1758540000**	5	104	111	80.5	104	for 7 modules	**12**
Female [2)]	HDC-CR24-7B-2		**1758550000**	5	104	111	80.5	104	for 7 modules	**12**

[2)] addition marrkings for the use of two frames in one housing.
2 frames = group size 12.

For accessories see section “Accessories”

Housings Group Size 8

Plug hood HB-24

Side locking lower side

T0VU

TSVU

Dimensions

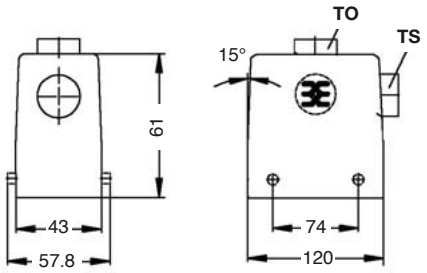

Version		Type	Cat. No.	Qty.
Standard housings, metric thread				
1 x M 25	thread	HDC HB24 TOVU 1xM25G	**1787820000**	2
1 x M 32	sleeve	HDC HB24 TSVU 1xM32	**1787750000**	2
1 x M 25	sleeve	HDC HB24 TSVU 1xM25	**1787760000**	2
1 x M 32	thread	HDC HB24 TOVU 1xM32G	**1787810000**	2
Standard housings, PG thread				
1 x Pg21	complete	HDC-HB-24-TSVU1/21P	**1212100000**	2
1 x Pg21	sleeve	HDC-HB-24-TSVU1/21	**1661230000**	2
1 x Pg29	complete	HDC-HB-24-TSVU1/29P	**1212200000**	2
1 x Pg29	sleeve	HDC-HB-24-TSVU1/29	**1661240000**	2
1 x Pg21	complete	HDC-HB-24-TOVU1/21P	**1211900000**	2
1 x Pg21	sleeve	HDC-HB-24-TOVU1/21	**1661370000**	2
1 x Pg29	complete	HDC-HB-24-TOVU1/29P	**1212000000**	2
1 x Pg29	sleeve	HDC-HB-24-TOVU1/29	**1661380000**	2

TOVU = Plug hood; Top cable entry,
side locking lower side
TSVU = Plug hood; Side cable entry.
side locking lower side

Plug hood HBD-64

Side locking lower side / high version

T0VU

TSVU

Dimensions

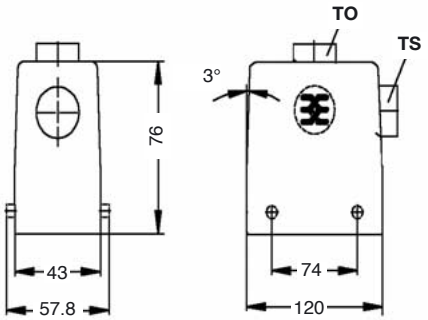

Version		Type	Cat. No.	Qty.
Standard housings, metric thread				
1 x M 25	thread	HDC HBD64 TSVU 1xM25G	**1786780000**	2
1 x M 32	thread	HDC HBD64 TSVU 1xM32G	**1786770000**	2
1 x M 25	thread	HDC HBD64 TOVU 1xM25G	**1786840000**	2
1 x M 32	thread	HDC HBD64 TOVU 1xM32G	**1786830000**	2
Standard housings, PG thread				
1 x Pg21	complete	HDC-HBD-64-TSVU1/21P	**1661290000**	2
1 x Pg21	sleeve	HDC-HBD-64-TSVU1/21	**1661300000**	2
1 x Pg29	complete	HDC-HBD-64-TSVU1/29P	**1661310000**	2
1 x Pg29	sleeve	HDC-HBD-64-TSVU1/29	**1661320000**	2
1 x Pg21	complete	HDC-HBD-64-TOVU1/21P	**1661430000**	2
1 x Pg21	sleeve	HDC-HBD-64-TOVU1/21	**1661440000**	2
1 x Pg29	complete	HDC-HBD-64-TOVU1/29P	**1661450000**	2
1 x Pg29	sleeve	HDC-HBD-64-TOVU1/29	**1661460000**	2

TOVU = Plug hood; Top cable entry,
side locking lower side
TSVU = Plug hood; Side cable entry.
side locking lower side

Base housing HB-24 / HBD-64

Side locking

SVU

Dimensions

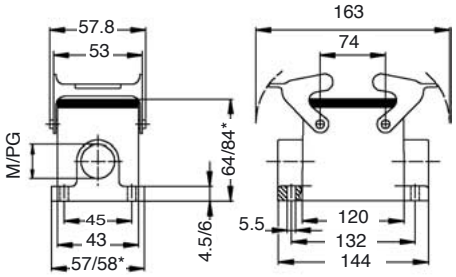

*HB/HBD

Version		Type	Cat. No.	Qty.
Standard housings, metric thread				
2 x M 25	thread	HDC HB24 SVU 2xM25G	**1787870000**	2
2 x M 25	thread	HDC HBD64 SVU 2xM25G	**1786890000**	2
2 x M 32	thread	HDC HBD64 SVU 2xM32G	**1786880000**	2
Standard housings, PG thread				
1 x Pg21	complete	HDC-HB-24-SVU1/21P	**1212500000**	2
1 x Pg21	sleeve	HDC-HB-24-SVU1/21	**1661510000**	2
2 x Pg21	complete	HDC-HB-24-SVU2/21P	**1212600000**	2
2 x Pg21	sleeve	HDC-HB-24-SVU2/21	**1661520000**	2
1 x Pg21	complete	HDC-HBD-64-SVU1/21P	**1661560000**	2
1 x Pg21	sleeve	HDC-HBD-64-SVU1/21	**1661570000**	2
1 x Pg29	complete	HDC-HBD-64-SVU1/29P	**1661600000**	2
1 x Pg29	sleeve	HDC-HBD-64-SVU1/29	**1661610000**	2
2 x Pg21	complete	HDC-HBD-64-SVU2/21P	**1661580000**	2
2 x Pg21	sleeve	HDC-HBD-64-SVU2/21	**1661590000**	2
2 x Pg29	complete	HDC-HBD-64-SVU2/29P	**1661620000**	2
2 x Pg29	sleeve	HDC-HBD-64-SVU2/29	**1661630000**	2

SVU = Base housing, side locking

For accessories see section “Accessories”

Housings Group Size 8

Coupling hood HB-24 / HBD-64

Side locking

KVU

KVU

Dimensions

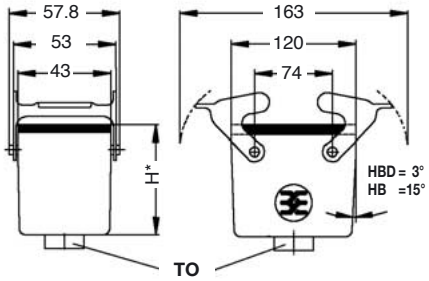

*HB = 63.8
HBD= 78.8

Version	Type	Cat. No.	Qty.
Standard housings, metric thread			
1 x M 25 thread	HDC HB24 KVU 1xM25G	**1787920000**	2
1 x M 32 thread	HDC HB24 KVU 1xM32G	**1787910000**	2
1 x M 25 thread	HDC HBD64 KVU 1xM25G	**1786970000**	2
1 x M 32 thread	HDC HBD64 KVU 1xM32G	**1786960000**	2
Standard housings, PG thread			
1 x Pg21 complete	HDC-HB-24-KVU1/21P	**1212700000**	2
1 x Pg21 sleeve	HDC-HB-24-KVU1/21	**1661720000**	2
1 x Pg29 complete	HDC-HB-24-KVU1/29P	**1212800000**	2
1 x Pg29 sleeve	HDC-HB-24-KVU1/29	**1661730000**	2
1 x Pg21 complete	HDC-HBD-64-KVU1/21P	**1661780000**	2
1 x Pg29 complete	HDC-HBD-64-KVU1/29P	**1661800000**	2

KVU = Coupling hood, side locking

Bulkhead housing HB-24

Side locking

AVU

Dimensions

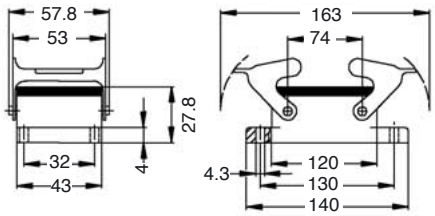

Version	Type	Cat. No.	Qty.
Standard housings			
	HDC-HB-24-AVU	**1212400000**	2

AVU = Bulkhead housing, side locking

Cover for plug hood

Cover with cord

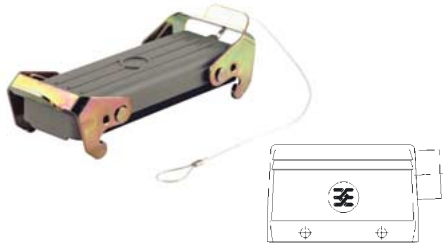

Type	Cat. No.	Qty.
Plastic cover		
HDC-HB-24-DT	**1665640000**	2

Cover for lower side with side locking

Cover with cord

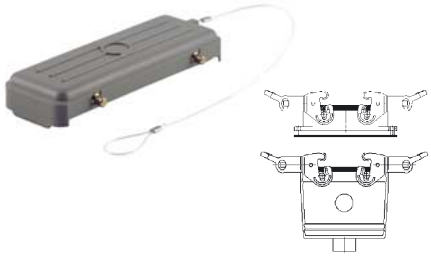

Type	Cat. No.	Qty.
Plastic cover		
HDC-HB-24-DB	**1665630000**	2

For accessories see section “Accessories”

Housings Group Size 8

Plug hood HB-24 / HBD-64

Side locking upper side

TOVO

TSVO

Dimensions

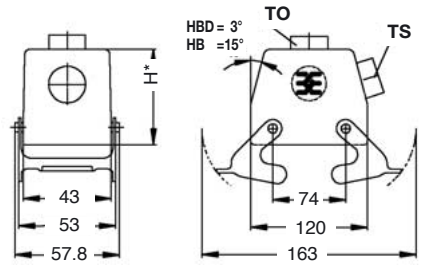

*HB = 61
HBD= 76

Version	Type	Cat. No.	Qty.
Standard housings, metric thread			
1 x M 25 sleeve	HDC HB24 TSVO 1xM25	**1787780000**	2
1 x M 32 sleeve	HDC HB24 TSVO 1xM32	**1787770000**	2
1 x M 25 thread	HDC HB24 TOVO 1xM25G	**1787840000**	2
1 x M 32 thread	HDC HB24 TOVO 1xM32G	**1787830000**	2
1 x M 25 thread	HDC HBD64 TOVO 1xM25G	**1786850000**	2
1 x M 32 thread	HDC HBD64 TOVO 1xM32G	**1804670000**	2
1 x M 25 thread	HDC HBD64 TSVO 1xM25G	**1786800000**	2
1 x M 32 thread	HDC HBD64 TSVO 1xM32G	**1786790000**	2
Standard housings, PG thread			
1 x Pg21 complete	HDC-HB-24-TSVO1/21P	**1213100000**	2
1 x Pg21 sleeve	HDC-HB-24-TSVO1/21	**1661860000**	2
1 x Pg29 complete	HDC-HB-24-TSVO1/29P	**1661870000**	2
1 x Pg29 sleeve	HDC-HB-24-TSVO1/29	**1661880000**	2
1 x Pg21 complete	HDC-HB-24-TOVO1/21P	**1212900000**	2
1 x Pg21 sleeve	HDC-HB-24-TOVO1/21	**1662010000**	2
1 x Pg29 complete	HDC-HB-24-TOVO1/29P	**1213000000**	2
1 x Pg29 sleeve	HDC-HB-24-TOVO1/29	**1662020000**	2
1 x Pg21 complete	HDC-HBD-64-TOVO1/21P	**1662070000**	2
1 x Pg21 sleeve	HDC-HBD-64-TOVO1/21	**1662080000**	2
1 x Pg29 complete	HDC-HBD-64-TOVO1/29P	**1662090000**	2
1 x Pg29 sleeve	HDC-HBD-64-TOVO1/29	**1662100000**	2
1 x Pg21 complete	HDC-HBD-64-TSVO1/21P	**1661930000**	2
1 x Pg21 sleeve	HDC-HBD-64-TSVO1/21	**1661940000**	2
1 x Pg29 complete	HDC-HBD-64-TSVO1/29P	**1661950000**	2
1 x Pg29 sleeve	HDC-HBD-64-TSVO1/29	**1661960000**	2

TOVO = Plug hood; Top cable entry, side locking
TSVO = Plug hood; Side cable entry, side locking

Base housing HB-24 / HBD-64

Side locking upper side **Group size 8**

SDVO

Dimensions

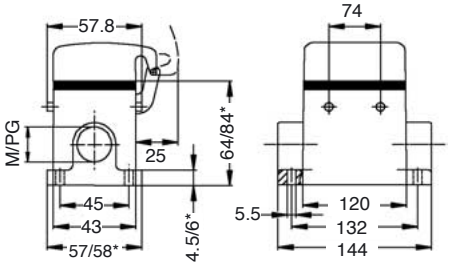

*HB/HBD

Version	Type	Cat. No.	Qty.
Standard housings with cover, metric thread			
2 x M 25 thread	HDC HB24 SDVO 2xM25G	**1787890000**	2
2 x M 25 thread	HDC HBD64 SDVO 2xM25G	**1786930000**	2
2 x M 32 thread	HDC HBD64 SDVO 2xM32G	**1786920000**	2
Standard housings with cover, metric thread			
1 x Pg21 complete	HDC-HB-24-SDVO1/21P	**1213400000**	2
1 x Pg21 sleeve	HDC-HB-24-SDVO1/21	**1662170000**	2
2 x Pg21 complete	HDC-HB-24-SDVO2/21P	**1213500000**	2
2 x Pg21 sleeve	HDC-HB-24-SDVO2/21	**1662180000**	2
1 x Pg29 complete	HDC-HBD-64-SDVO1/29P	**1662270000**	2
1 x Pg29 sleeve	HDC-HBD-64-SDVO1/29	**1662280000**	2
2 x Pg21 complete	HDC-HBD-64-SDVO2/21P	**1662250000**	2

SDVO = Base housing with cover, side locking upper side

Bulkhead housing HB-24

Side locking upper side **Group size 8**

ADVO

Dimensions

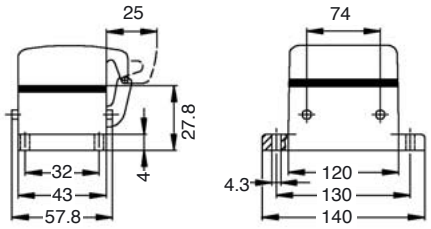

Version	Type	Cat. No.	Qty.
Standard housings with cover			
	HDC-HB-24-ADVO	**1213300000**	2

ADVO = Bulkhead housing with cover, side locking upper side

Cover for plug hood with side locking

Cover with cord

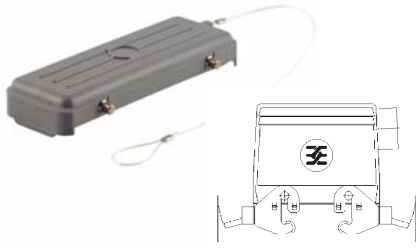

Type	Cat. No.	Qty.
Plastic cover		
HDC-HB-24-DBP	**1665650000**	2

For accessories see section “Accessories”

Housings Group Size 8

Plug hood HB-24

End locking lower side

TOVL

TSVL

Dimensions

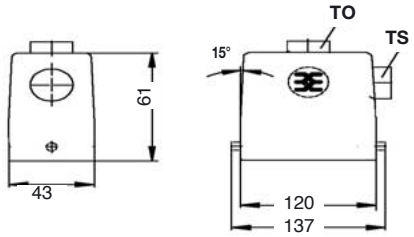

Version		Type	Cat. No.	Qty.
Standard housings, metric thread				
1 x M 25	sleeve	HDC HB24 TSVL 1xM25	**1787800000**	2
1 x M 32	sleeve	HDC HB24 TSVL 1xM32	**1787790000**	2
1 x M 25	thread	HDC HB24 TOVL 1xM25G	**1787860000**	2
1 x M 32	thread	HDC HB24 TOVL 1xM32G	**1787850000**	2
Standard housings, PG thread				
1 x Pg21	complete	HDC-HB-24-TSVL1/21P	**1213800000**	2
1 x Pg21	sleeve	HDC-HB-24-TSVL1/21	**1662390000**	2
1 x Pg29	complete	HDC-HB-24-TSVL1/29P	**1662400000**	2
1 x Pg29	sleeve	HDC-HB-24-TSVL1/29	**1662410000**	2
1 x Pg21	complete	HDC-HB-24-TOVL1/21P	**1213600000**	2
1 x Pg21	sleeve	HDC-HB-24-TOVL1/21	**1662540000**	2
1 x Pg29	complete	HDC-HB-24-TOVL1/29P	**1213700000**	2
1 x Pg29	sleeve	HDC-HB-24-TOVL1/29	**1662550000**	2

TOVL Plug hood; Top cable entry, end locking lower side
TSVL = Plug hood; Side cable entry, end locking lower side

Plug hood HBD-64

End locking lower side / high version

TOVL

TSVL

Dimensions

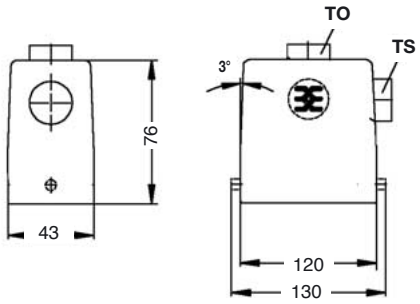

Version		Type	Cat. No.	Qty.
Standard housings, metric thread				
1 x M 25	thread	HDC HBD64 TSVL 1xM25G	**1786820000**	2
1 x M 32	thread	HDC HBD64 TSVL 1xM32G	**1786810000**	2
1 x M 25	thread	HDC HBD64 TOVL 1xM25G	**1786870000**	2
1 x M 32	thread	HDC HBD64 TOVL 1xM32G	**1786860000**	2
Standard housings, PG thread				
1 x Pg21	complete	HDC-HBD-64-TSVL1/21P	**1662460000**	2
1 x Pg21	sleeve	HDC-HBD-64-TSVL1/21	**1662470000**	2
1 x Pg29	complete	HDC-HBD-64-TSVL1/29P	**1662480000**	2
1 x Pg29	sleeve	HDC-HBD-64-TSVL1/29	**1662490000**	2
1 x Pg29	complete	HDC-HBD-64-TOVL1/29P	**1662620000**	2
1 x Pg29	sleeve	HDC-HBD-64-TOVL1/29	**1662630000**	2

TOVL Plug hood; Top cable entry, end locking lower side
TSVL = Plug hood; Side cable entry, end locking lower side

Base housing HB-24 / HBD-64

End locking / with/without cover

SVL

SDVL

Dimensions

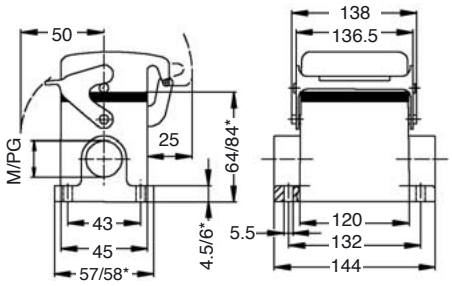

*HB/HBD

Version		Type	Cat. No.	Qty.
Standard housings, metric thread				
2 x M 25	thread	HDC HB24 SVL 2xM25G	**1787880000**	2
2 x M 25	thread	HDC HBD64 SVL 2xM25G	**1786910000**	2
2 x M 32	thread	HDC HBD64 SVL 2xM32G	**1786900000**	2
2 x M 25	thread	HDC HBD64 SDVL 2xM25G	**1786950000**	2
2 x M 32	thread	HDC HBD64 SDVL 2xM32G	**1786940000**	2
Standard housings with cover, metric thread				
2 x M 25	thread	HDC HB24 SDVL 2xM25G	**1787900000**	2
Standard housings, PG thread				
1 x Pg21	complete	HDC-HB-24-SVL1/21P	**1214000000**	2
1 x Pg21	sleeve	HDC-HB-24-SVL1/21	**1662710000**	2
2 x Pg21	complete	HDC-HB-24-SVL2/21P	**1214100000**	2
2 x Pg21	sleeve	HDC-HB-24-SVL2/21	**1662720000**	2
2 x Pg21	complete	HDC-HBD-64-SVL2/21P	**1662780000**	2
Standard housings with cover, PG thread				
1 x Pg21	complete	HDC-HB-24-SDVL1/21P	**1214400000**	2
1 x Pg21	sleeve	HDC-HB-24-SDVL1/21	**1662920000**	2
2 x Pg21	complete	HDC-HB-24-SDVL2/21P	**1214500000**	2
2 x Pg29	sleeve	HDC-HBD-64-SDVL2/29	**1663040000**	2
1 x Pg21	complete	HDC-HBD-64-SDVL1/21P	**1662970000**	2
1 x Pg29	complete	HDC-HBD-64-SDVL1/29P	**1663010000**	2

SVL = Base housing, end locking
SDVL = Base housing with cover, end locking

For accessories see section “Accessories”

Housings Group Size 8

Coupling hood HB-24 / HBD-64

End locking

KVL

Dimensions

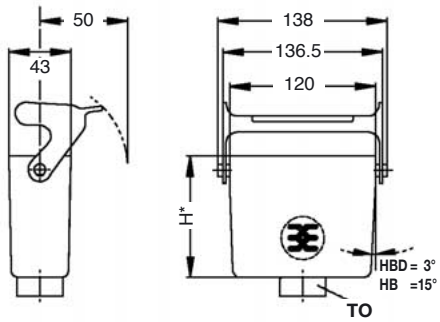

*HB = 63.8
HBD= 78.8

Version	Type	Cat. No.	Qty.
Standard housings, metric thread			
1 x M 25 thread	HDC HB24 KVL 1xM25G	**1787940000**	2
1 x M 32 thread	HDC HB24 KVL 1xM32G	**1787930000**	2
1 x M 25 thread	HDC HBD64 KVL 1xM25G	**1786990000**	2
1 x M 32 thread	HDC HBD64 KVL 1xM32G	**1786980000**	2
Standard housings, PG thread			
1 x Pg21 complete	HDC-HB-24-KVL1/21P	**1663130000**	2
1 x Pg29 complete	HDC-HB-24-KVL1/29P	**1214200000**	2
1 x Pg29 complete	HDC-HBD-64-KVL1/29P	**1663220000**	2

KVL = Coupling hood, end locking

Bulkhead housing HB-24

End locking, with/without cover

AVL

ADVL

Dimensions

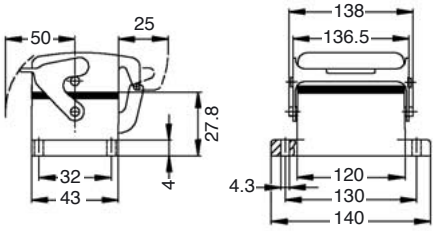

Version	Type	Cat. No.	Qty.
Standard housings			
	HDC-HB-24-AVL	**1213900000**	2
Standard housings with cover			
	HDC-HB-24-ADVL	**1214300000**	2

AVL= Bulkhead housing, end locking
ADVL = Bulkhead housing with cover, end locking

For accessories see section “Accessories”

Housings Group Size 8

Plug hood HBD-64

Centre locking

TSVZ

Dimensions

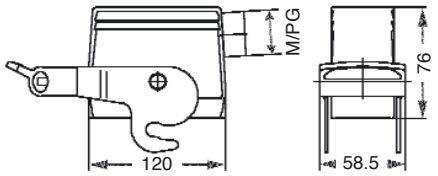

Version		Type	Cat. No.	Qty.
Standard housings, metric thread				
1 x Pg21	complete	HDC-HBD-64-TSVZ1/21P	**1663360000**	2
1 x Pg29	complete	HDC-HBD-64-TSVZ1/29P	**1603510000**	2
1 x Pg29	sleeve	HDC-HBD-64-TSVZ1/29	**1663390000**	2

TSVZ = Plug hood; Side cable entry, centre locking

Base housing HB-24

Centre locking upper side

SVZ

Dimensions

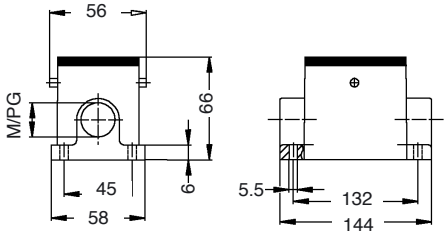

Version		Type	Cat. No.	Qty.
Standard housings, PG thread				
1 x Pg21	complete	HDC-HB-24-SVZ1/21P	**1600620000**	2

SVZ = Base housing, centre locking

Bulkhead housing HB-24

Centre locking

AVZ

Dimensions

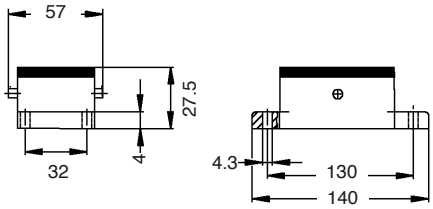

Version		Type	Cat. No.	Qty.
Standard housings				
		HDC-HB-24-AVZ	**1611350000**	2

AVZ = Bulkhead housing, centre locking

For accessories see section “Accessories”

Компания «ЭлектроПласт» предлагает заключение долгосрочных отношений при поставках импортных электронных компонентов на взаимовыгодных условиях!

Наши преимущества:

- Оперативные поставки широкого спектра электронных компонентов отечественного и импортного производства напрямую от производителей и с крупнейших мировых складов;
- Поставка более 17-ти миллионов наименований электронных компонентов;
- Поставка сложных, дефицитных, либо снятых с производства позиций;
- Оперативные сроки поставки под заказ (от 5 рабочих дней);
- Экспресс доставка в любую точку России;
- Техническая поддержка проекта, помощь в подборе аналогов, поставка прототипов;
- Система менеджмента качества сертифицирована по Международному стандарту ISO 9001;
- Лицензия ФСБ на осуществление работ с использованием сведений, составляющих государственную тайну;
- Поставка специализированных компонентов (Xilinx, Altera, Analog Devices, Intersil, Interpoint, Microsemi, Aeroflex, Peregrine, Syfer, Eurofarad, Texas Instrument, Miteq, Cobham, E2V, MA-COM, Hittite, Mini-Circuits,General Dynamics и др.);

Помимо этого, одним из направлений компании «ЭлектроПласт» является направление «Источники питания». Мы предлагаем Вам помощь Конструкторского отдела:

- Подбор оптимального решения, техническое обоснование при выборе компонента;
- Подбор аналогов;
- Консультации по применению компонента;
- Поставка образцов и прототипов;
- Техническая поддержка проекта;
- Защита от снятия компонента с производства.

Как с нами связаться

Телефон: 8 (812) 309 58 32 (многоканальный)
Факс: 8 (812) 320-02-42
Электронная почта: org@eplast1.ru
Адрес: 198099, г. Санкт-Петербург, ул. Калинина, дом 2, корпус 4, литера А.