THIS DRAWING IS UNPUBLISHED. RELEASED FOR PUBLICATION -,- .
© COPYRIGHT - BY TYCO ELECTRONICS CORPORATION. ALL RIGHTS RESERVED.

LOC	DIST
DW	—

REVISIONS

P	LTR	DESCRIPTION	DATE	DWN	APVD
	F	REVISED SHELL MATERIAL	18MAY16	BL	J.L

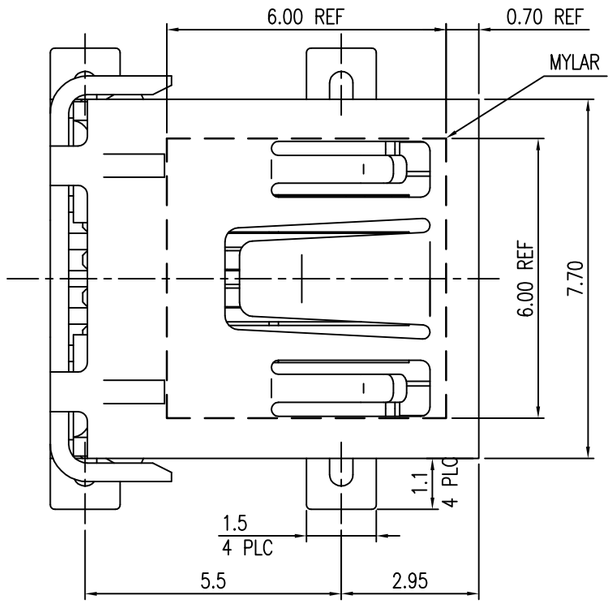

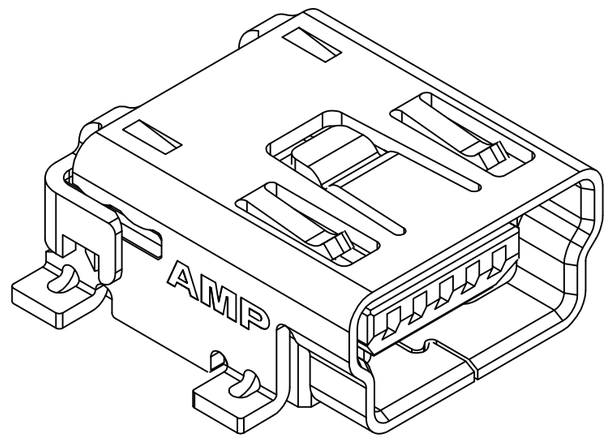

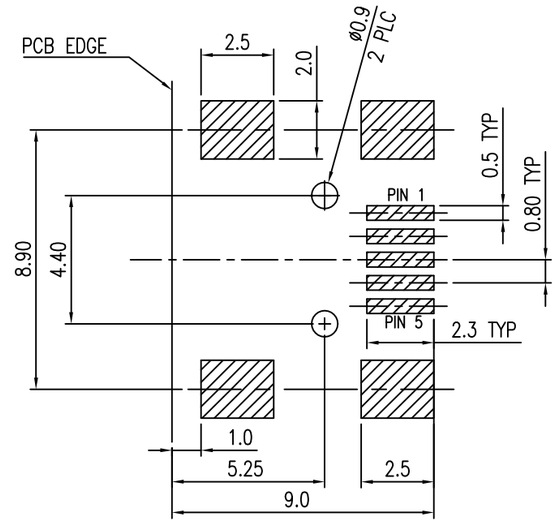

RECOMMENDED PCB LAYOUT (MOUNTING SIDE)
THICKNESS 1.57mm (TOLERANCE: ±0.05)

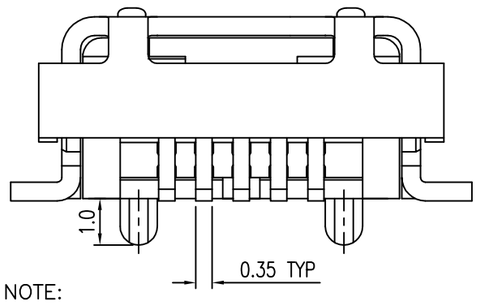

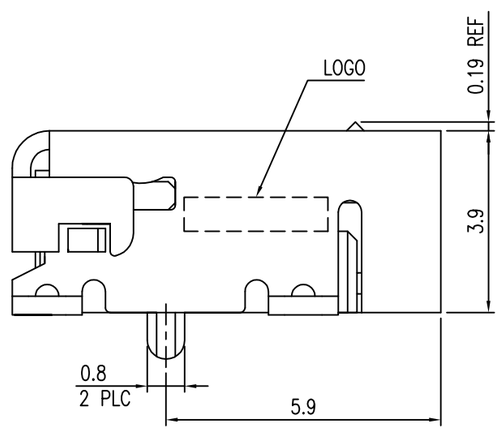

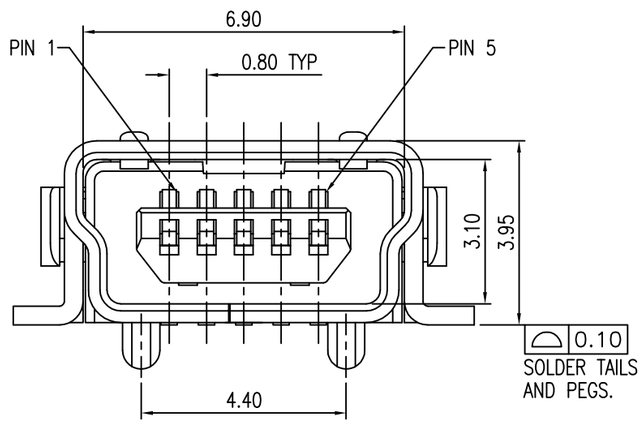

NOTE:
1. MATERIAL:
   HOUSING: PA9T WITH 33% GF, UL 94V-0, COLOR: SEE TABLE.
   CONTACTS: PHOSPHOR BRONZE.
   SHELL: SUS304,THICKNESS=0.40MM.
   MYLAR: POLYAMIDE FILM.
2. FINISH:
   CONTACTS: GOLD FLASH OVER
   0.762μm [30μ"] MIN. PALLADIUM-NICKEL PLATED ON CONTACT AREA,
   A 2.54μm [100μ"] MIN. MATTE-TIN ON SOLDER TAIL,
   B 2.54μm [100μ"] MIN. MATTE-TIN ON SOLDER TAIL,
   C 3.05μm [120μ"] MIN. MATTE-TIN ON SOLDER TAIL,
   WITH ENTIRE CONTACT UNDERPLATED 1.27μm [50μ"] MIN. NICKEL.
   SHELL: A & B 1.27μm [50μ"] MIN. NICKEL PLATED OVERALL.
   C 0.76μm [30μ"] MIN. MATTE-TIN OVER 1.27μm [50μ"] MIN. NICKEL.
3. NO DATECODE ON PRODUCT SURFACE.
4. REFLOW SOLDER CAPABLE TO 260°C PER TE TEST SPEC. 109-201, CONDITION B.

C	BLACK	W/O	W/O	TAPE REEL	W/	3-1734035-2
B	BLACK	W/	W/O	TAPE REEL	W/	2-1734035-4
	BLACK	W/O	W/	TAPE REEL	W/	2-1734035-3
	BLACK	W/O	W/O	TAPE REEL	W/	2-1734035-2
	BLACK	W/O	N/A	TRAY	W/	2-1734035-1
A	NATURAL	W/	W/O	TAPE REEL	W/	1734035-5
	BLACK	W/	W/O	TAPE REEL	W/	1734035-4
	BLACK	W/O	W/	TAPE REEL	W/	1734035-3
	BLACK	W/O	W/O	TAPE REEL	W/	1734035-2
	BLACK	W/O	N/A	TRAY	W/	1734035-1
PLATED	HOUSING COLOR	MYLAR	LONG CARRIER & COVER TAPE	PACKAGE	POST	PART NUMBER

THIS DRAWING IS A CONTROLLED DOCUMENT.

DIMENSIONS: MM

TOLERANCES UNLESS OTHERWISE SPECIFIED:

0 PLC	± 0.38
1 PLC	± 0.25
2 PLC	± 0.13
3 PLC	± 0.05
4 PLC	± -
ANGLES	± 3°

MATERIAL: SEE NOTE

FINISH: SEE NOTE

DWN	O. HU	21DEC2007
CHK	S. HOU	21DEC2007
APVD	W. KODAMA	21DEC2007
PRODUCT SPEC	108-57062	
QUALIFICATION TEST REPORT	501-57070	
WEIGHT	--	

TE Connectivity

NAME: MINI USB, R/A, SMT, B TYPE

SIZE	CAGE CODE	DRAWING NO	RESTRICTED TO
A3	00779	C-1734035	—

CUSTOMER DRAWING | SCALE — | SHEET 1 OF 4 | REV F

THIS DRAWING IS UNPUBLISHED. RELEASED FOR PUBLICATION -,- .
© COPYRIGHT - BY TYCO ELECTRONICS CORPORATION. ALL RIGHTS RESERVED.

LOC	DIST
DW	—

REVISIONS

P	LTR	DESCRIPTION	DATE	DWN	APVD
		SEE SHEET 1.			

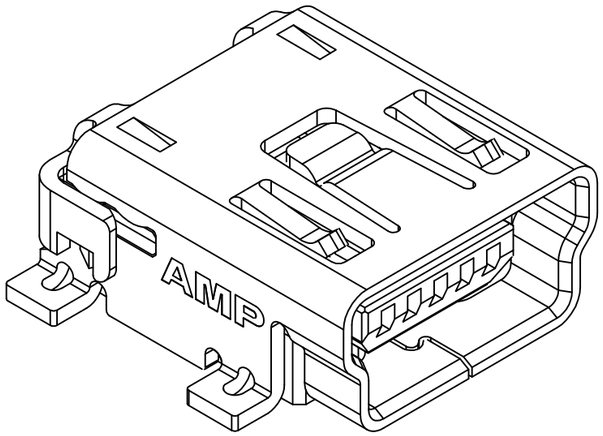

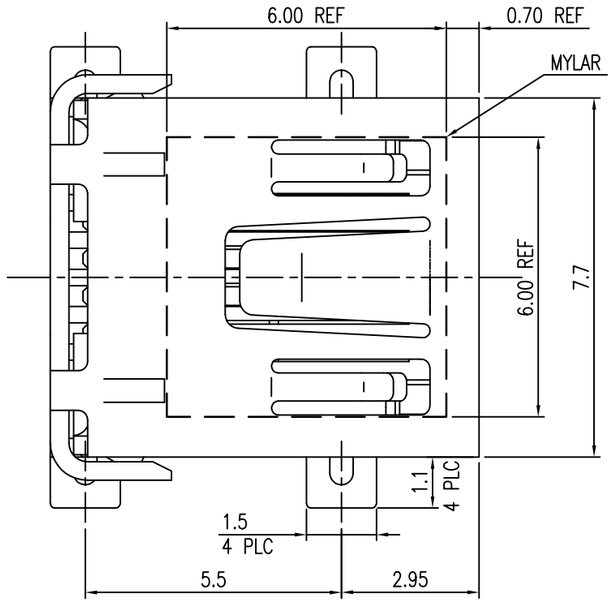

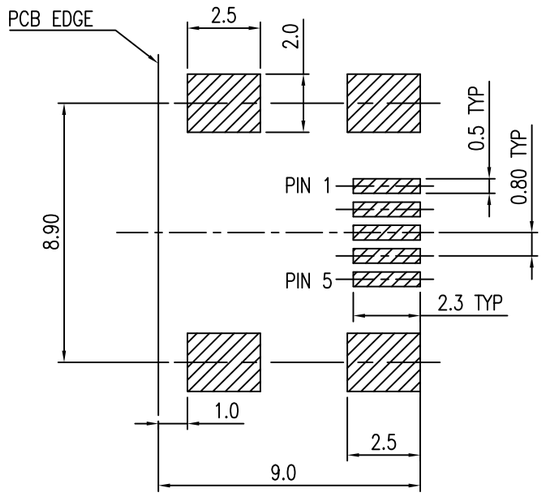

RECOMMENDED PCB LAYOUT (MOUNTING SIDE)
THICKNESS 1.57mm (TOLERANCE:±0.05)

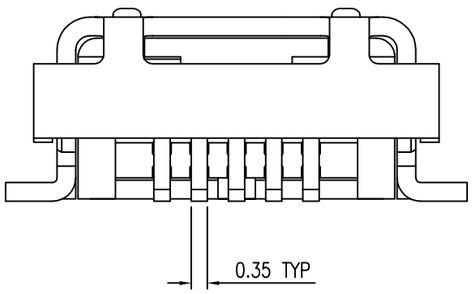

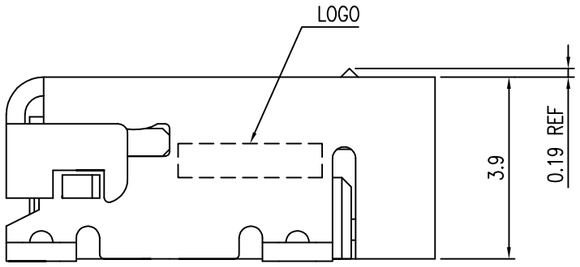

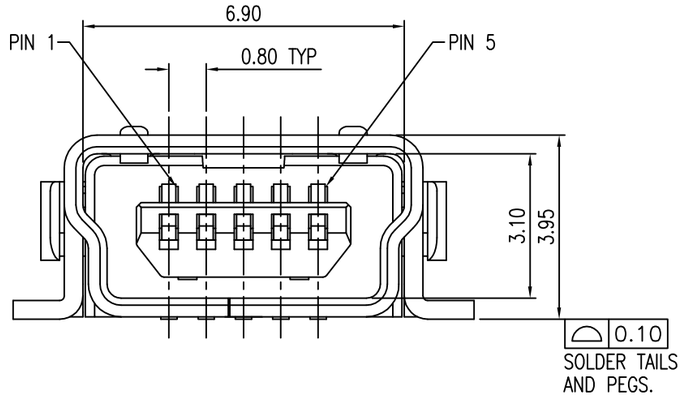

NOTE:

1. MATERIAL:
   HOUSING: PA9T WITH 33% GF, UL 94V-0, BLACK COLOR.
   CONTACTS: PHOSPHOR BRONZE.
   SHELL: SUS304,THICKNESS=0.40MM.
   MYLAR: POLYAMIDE FILM.

2. FINISH:
   CONTACTS: GOLD FLASH OVER
   0.762μm [30μ″] MIN. PALLADIUM-NICKEL PLATED ON CONTACT AREA,
   2.54μm [100μ″] MIN. MATTE-TIN ON SOLDER TAIL, WITH
   ENTIRE CONTACT UNDERPLATED 1.27μm [50μ″] MIN. NICKEL.
   SHELL: 1.27μm [50μ″] MIN. NICKEL PLATED OVERALL.

3. NO DATECODE ON PRODUCT SURFACE.

4. REFLOW SOLDER CAPABLE TO 260°C PER TE TEST SPEC. 109-201, CONDITION B.

W/	W/O	TAPE REEL	W/O	4-1734035-2
W/O	W/	TAPE REEL	W/O	1-1734035-3
	W/O	TAPE REEL	W/O	1-1734035-2
	N/A	TRAY	W/O	1-1734035-1
MYLAR	LONG CARRIER & COVER TAPE	PACKAGE	POST	PART NUMBER

THIS DRAWING IS A CONTROLLED DOCUMENT.

DIMENSIONS: MM

TOLERANCES UNLESS OTHERWISE SPECIFIED:

0 PLC	± 0.38
1 PLC	± 0.25
2 PLC	± 0.13
3 PLC	± 0.05
4 PLC	± –
ANGLES	± 3°

MATERIAL: SEE NOTE

FINISH: SEE NOTE

DWN
CHK
APVD
PRODUCT SPEC —
APPLICATION SPEC —
WEIGHT —

TE Connectivity

NAME: MINI USB, R/A, SMT, B TYPE

SIZE	CAGE CODE	DRAWING NO	RESTRICTED TO
A3	00779	C-1734035	—

CUSTOMER DRAWING | SCALE — | SHEET 2 OF 4 | REV F

THIS DRAWING IS UNPUBLISHED. RELEASED FOR PUBLICATION -,- .
© COPYRIGHT - BY TYCO ELECTRONICS CORPORATION. ALL RIGHTS RESERVED.

LOC	DIST
DW	—

REVISIONS

P	LTR	DESCRIPTION	DATE	DWN	APVD
		SEE SHEET 1.			

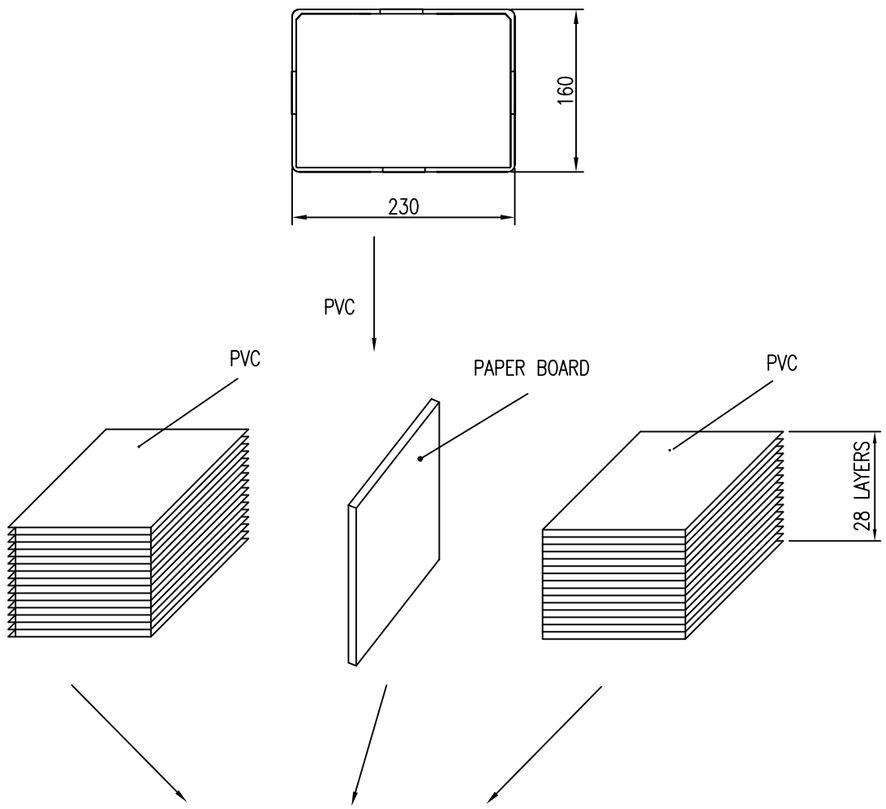

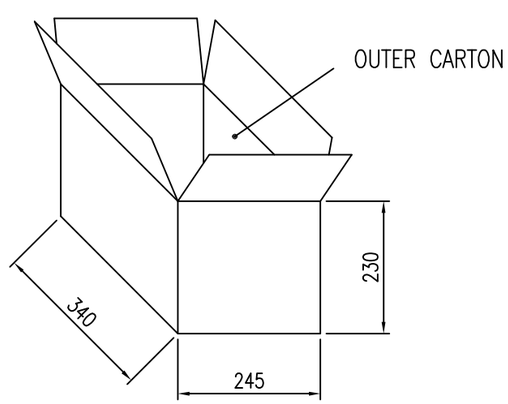

GROSS WEIGHT	NET WEIGHT	PCS/TRAY	TRAYS /CARTON	QUANTITY	PART NUMBER
8.25 Kg	5.55 Kg	150	56	8400 PCS	2-1734035-1
					1-1734035-1
					1734035-1

THIS DRAWING IS A CONTROLLED DOCUMENT.

DIMENSIONS: MM

TOLERANCES UNLESS OTHERWISE SPECIFIED:
0 PLC ± -
1 PLC ± -
2 PLC ± -
3 PLC ± -
4 PLC ± -
ANGLES ± -

MATERIAL -

FINISH -

DWN
CHK
APVD
PRODUCT SPEC —
APPLICATION SPEC —
WEIGHT —

TE Connectivity

NAME: MINI USB, R/A, SMT, B TYPE

SIZE	CAGE CODE	DRAWING NO	RESTRICTED TO
A3	00779	C-1734035	—

CUSTOMER DRAWING | SCALE — | SHEET 3 OF 4 | REV F

THIS DRAWING IS UNPUBLISHED. RELEASED FOR PUBLICATION -,- .
© COPYRIGHT - BY TYCO ELECTRONICS CORPORATION. ALL RIGHTS RESERVED.

LOC	DIST
DW	—

REVISIONS

P	LTR	DESCRIPTION	DATE	DWN	APVD
		SEE SHEET 1.			

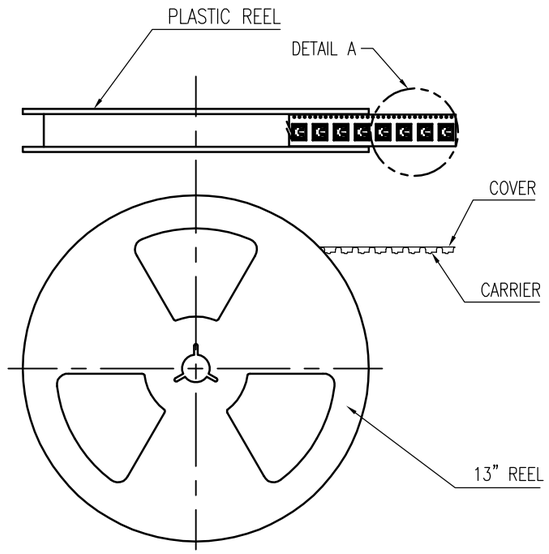

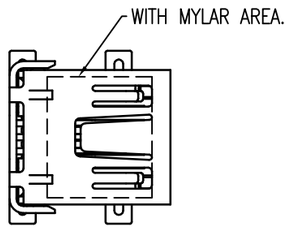

VIEW A

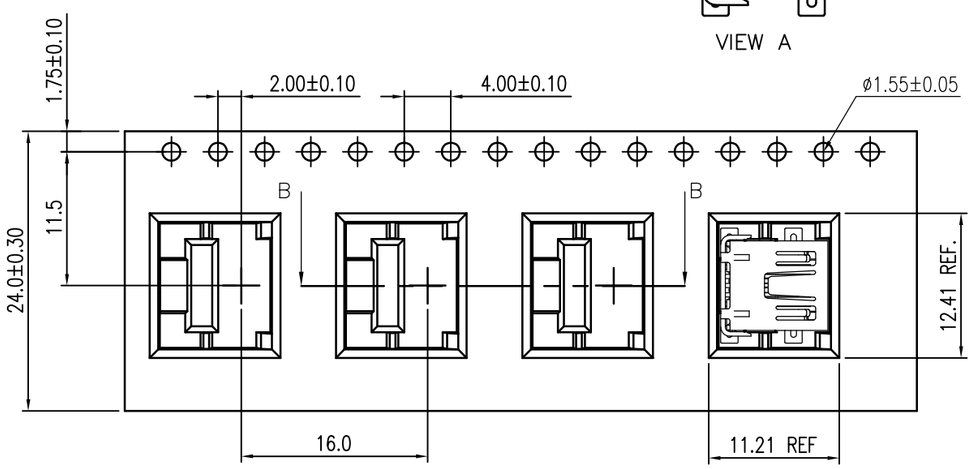

DETAIL A

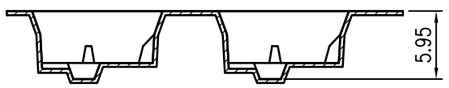

SECTION B–B

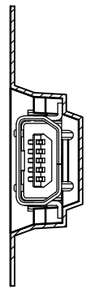

FOR 1734035-3, 1-1734035-3 AND 2-1734035-3 (LONG CARRIER & COVER TAPE)

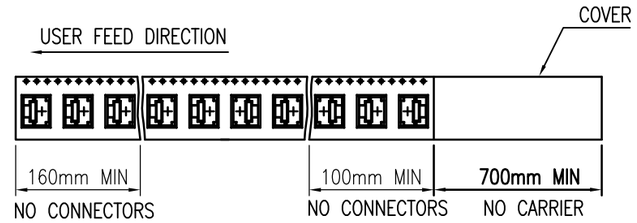

FOR 1734035-2, 1734035-4, 1734035-5, 1-1734035-2,
3-1734035-2, 2-1734035-2, 2-1734035-4, 4-1734035-2

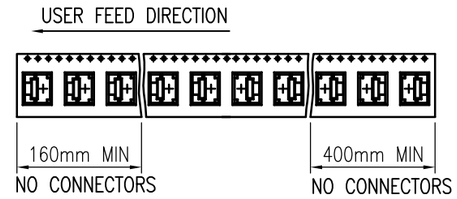

GROSS WEIGHT	NET WEIGHT	PCS/REER	REERS /CARTON	QUANTITY	MYLAR	LONG CARRIER & COVER TAPE	PART NUMBER
4.95 Kg	2.31 Kg	700	5	3500	W/	W/O	4-1734035-2
					W/O	W/O	3-1734035-2
					W/	W/O	2-1734035-4
					W/O	W/	2-1734035-3
					W/O	W/O	2-1734035-2
					W/O	W/	1-1734035-3
					W/O	W/O	1-1734035-2
					W/	W/O	1734035-5
					W/	W/O	1734035-4
					W/O	W/	1734035-3
					W/O	W/O	1734035-2

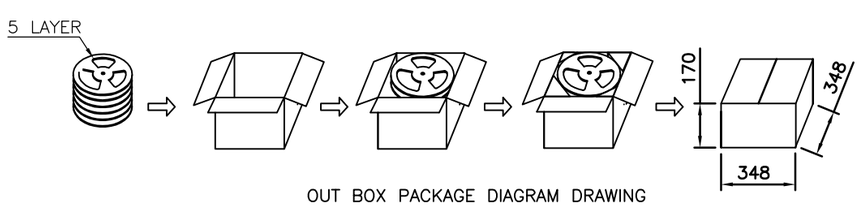

OUT BOX PACKAGE DIAGRAM DRAWING

THIS DRAWING IS A CONTROLLED DOCUMENT.

DIMENSIONS: MM

TOLERANCES UNLESS OTHERWISE SPECIFIED:
0 PLC ± –
1 PLC ± –
2 PLC ± –
3 PLC ± –
4 PLC ± –
ANGLES ± –

MATERIAL –

FINISH –

DWN
CHK
APVD
PRODUCT SPEC —
APPLICATION SPEC —
WEIGHT —

TE Connectivity

NAME MINI USB, R/A, SMT, B TYPE

SIZE	CAGE CODE	DRAWING NO	RESTRICTED TO
A3	00779	C-1734035	—

CUSTOMER DRAWING | SCALE — | SHEET 4 OF 4 | REV F

Компания «ЭлектроПласт» предлагает заключение долгосрочных отношений при поставках импортных электронных компонентов на взаимовыгодных условиях!

Наши преимущества:

- Оперативные поставки широкого спектра электронных компонентов отечественного и импортного производства напрямую от производителей и с крупнейших мировых складов;
- Поставка более 17-ти миллионов наименований электронных компонентов;
- Поставка сложных, дефицитных, либо снятых с производства позиций;
- Оперативные сроки поставки под заказ (от 5 рабочих дней);
- Экспресс доставка в любую точку России;
- Техническая поддержка проекта, помощь в подборе аналогов, поставка прототипов;
- Система менеджмента качества сертифицирована по Международному стандарту ISO 9001;
- Лицензия ФСБ на осуществление работ с использованием сведений, составляющих государственную тайну;
- Поставка специализированных компонентов (Xilinx, Altera, Analog Devices, Intersil, Interpoint, Microsemi, Aeroflex, Peregrine, Syfer, Eurofarad, Texas Instrument, Miteq, Cobham, E2V, MA-COM, Hittite, Mini-Circuits,General Dynamics и др.);

Помимо этого, одним из направлений компании «ЭлектроПласт» является направление «Источники питания». Мы предлагаем Вам помощь Конструкторского отдела:

- Подбор оптимального решения, техническое обоснование при выборе компонента;
- Подбор аналогов;
- Консультации по применению компонента;
- Поставка образцов и прототипов;
- Техническая поддержка проекта;
- Защита от снятия компонента с производства.

Как с нами связаться

Телефон: 8 (812) 309 58 32 (многоканальный)
Факс: 8 (812) 320-02-42
Электронная почта: org@eplast1.ru
Адрес: 198099, г. Санкт-Петербург, ул. Калинина, дом 2, корпус 4, литера А.