Data Sheet
August 1999

microelectronics group

Lucent Technologies
Bell Labs Innovations

LG1600FXH Clock and Data Regenerator

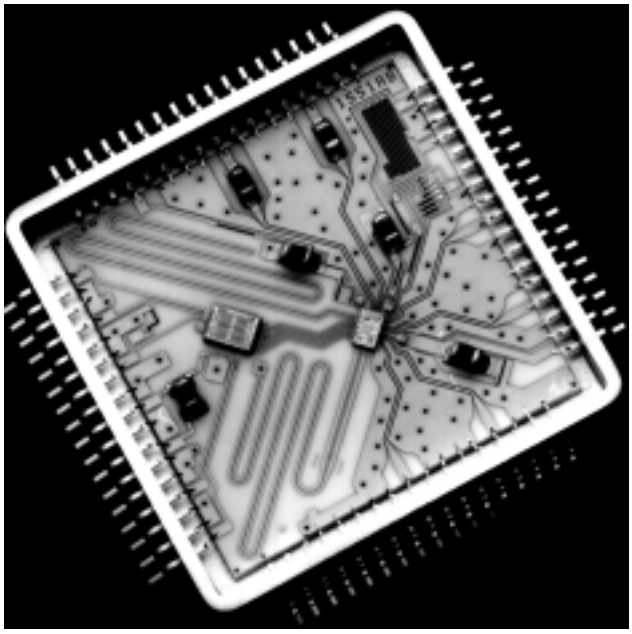

Figure 1. LG1600FXH Open View

Features

- Integrated clock recovery and data retiming
- Surface-mount package
- Single ECL supply
- Robust FPLL design
- Operation up to BER = $1e^{-3}$
- SONET/SDH compatible loss of signal alarm
- High effective Q allows long run lengths
- Jitter tolerance exceeding ITU-T/Bellcore
- Low clock jitter generation: typical <0.005 UI
- Standard and custom data rates
  0.50 Gbits/s—5.5 Gbits/s
- Complementary 50 Ω I/Os

Applications

- SONET/SDH receiver terminals and regenerators
  OC-12 through OC-96/STM-4 through STM-32
- SONET/SDH test equipment
- Proprietary bit rate systems
- Digital video transmission
- Clock doublers and quadruplers

Functional Description

The LG1600FXH Clock and Data Regenerator (CDR) is a compact, single device solution to clock recovery and data retiming in high-speed communication systems such as fiber-optic data links and long-span fiber-optic regenerators and terminals. Using frequency and phase-lock loop (FPLL) techniques, the device regenerates clean clock and error-free data signals from a nonreturn-to-zero (NRZ) data input, corrupted by jitter and intersymbol interference. The LG1600FXH exceeds ITU-T/Bellcore jitter tolerance requirements for SONET/SDH systems.

The device houses two integrated circuits on an alumina substrate inside a hermetically sealed 3 cm × 3 cm (1.2 in. × 1.2 in.) surface-mount package: a GaAs IC that contains the high-speed part of an FPLL as well as a highly sensitive decision circuit; and a silicon bipolar IC that contains a loop filter, acquisition, and signal detect circuitry.

The two ac-coupled complementary data inputs can be driven differentially as well as single ended. A dc feedback voltage V_{-FB} maintains a data input threshold V_{-TH} (decision level) that is optimum for a wide range of 50% duty cycle input levels (connect to V_{-TH}). If needed, the user can supply an external threshold to compensate for different mark densities or distorted input signals (see Figure 10).

Regenerated clock and data are available from complementary outputs that can either be ac coupled, to provide 50 Ω output match, or dc coupled with 50 Ω to ground at the receiving end.

The second-order PLL filter bandwidth is set by the user with an external resistor between pin 11 and ground (required). An internal capacitor provides sufficient PLL damping for most applications. In critical applications, PLL damping can be increased using an external capacitor between pins 9 and 11.

The device is powered by a single –5.2 V ECL compatible supply and typically consumes 1.5 W.

The LG1600FXH comes in standard bit rates, but can be factory tuned for any rate between 500 Mbits/s and 5500 Mbits/s.

A test fixture (TF1004A) with SMA connectors is available to allow quick evaluation of the LG1600FXH.

Theory of Operation

A digital regenerator has the task of retransmitting a bit stream that is received from a remote source with the same fidelity at which it was originally transmitted.

Two basic properties of the digital signal need to be restored: the timing of the transitions between the bits and the value of each bit.

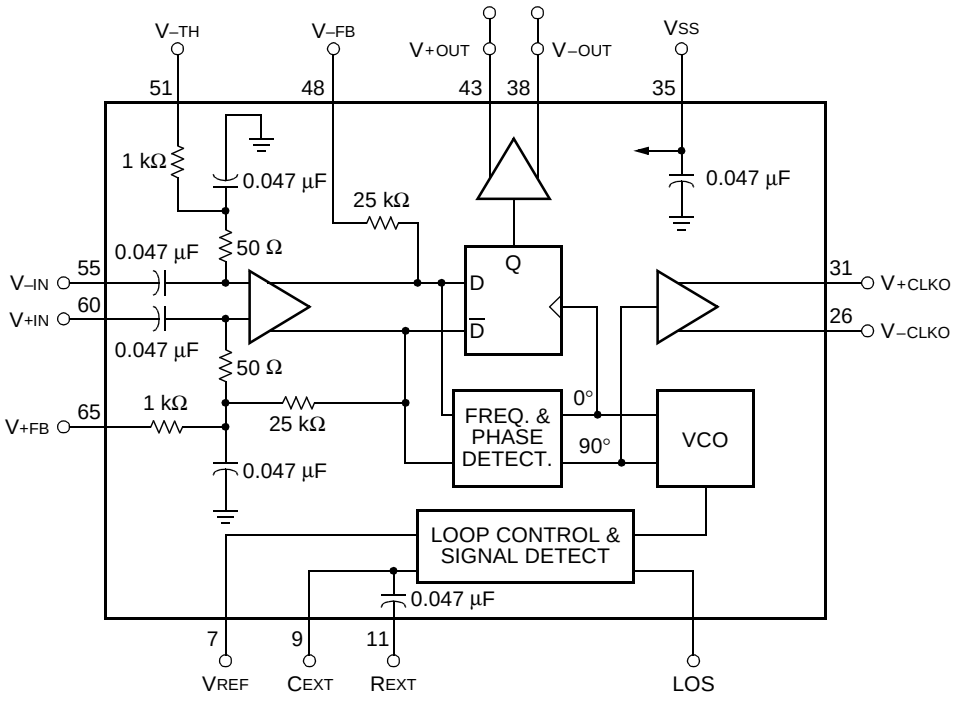

12-3225(F)r.6

Figure 2. LG1600FXH Block Diagram

Theory of Operation (continued)

Consequently, the timing information that is present in the data needs to be extracted and a decision as to the value of each bit must be made. Both timing instant and decision levels are critical, since the economics of data transmission dictate the largest distance possible between transmitter and receiver. A practically closed data eye can therefore be expected at the output of the receiver, allowing only a small decision window.

An added complication in nonreturn-to-zero (NRZ) systems is the absence of clock component in the data signal itself. Practical clock recovery circuits have used a combination of nonlinear processing to extract a spectral component at the clock frequency and narrowband filtering using a SAW filter or dielectric resonator. The relative bandwidth of such a filter must be on the order of a few tenths of a percent to minimize the data pattern dependence of the resulting clock. Temperature behavior of the passband characteristics, such as group delay, must be tightly matched to that of the data path. These extreme requirements make such a discrete design very difficult to manufacture at Gbits/s data rates.

The LG1600FXH clock and data regenerator relies on phase-lock loop techniques, rather than passive filtering. The filter properties of a PLL are determined at low frequencies where parasitic elements play only a minor roll and stability is easily maintained. Furthermore, the reference frequency is determined by the data rate itself, rather than by the physical properties of a bandpass filter.

Although PLLs can eliminate some of the shortcomings of passive bandpass filters used in clock recovery circuits, care was taken in the design of the LG1600FXH to preserve desired properties such as linearity of the jitter characteristics. A linear jitter transfer makes it a lot easier for the system designer to predict the overall performance of a link.

As a result, the architecture chosen for the device is not basically different from the conventional clock recovery circuit. A transition detector extracts a pulse train from the incoming data signal which is used as a reference signal for a PLL. The transition pulse train can be seen as a clock signal that is modulated with the instantaneous transition density of the data signal. The PLL locks onto the frequency and phase of this pulse train and freewheels during times when transitions are absent. The LG1600FXH features dual phase detectors; one driven by an in-phase clock which is also driving the decision circuit flip-flop, the other is driven by a quadrature clock. The phase detectors produce a zero output when their respective clocks are centered with respect to the transition pulses.

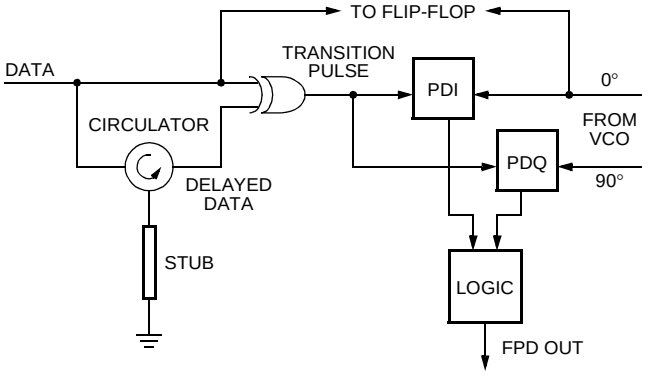

12-3226(F)r.3

Figure 3. Frequency and Phase Detector

For a transition pulse of half the width of the bit period, the timing diagram of Figure 4 shows how the in-phase clock ends up in the center of the data eye when the quadrature-phase detector output is forced to zero by the loop. The (patented) transition detector is comprised of an (active) circulator, a shorted stub, and an exclusive-OR gate. The circulator/stub combination produces a delayed version of the data. A transition at the input of the circuit results in an output pulse from the exclusive-OR gate whose width equals the return delay of the stub. The stub is tuned for a given bit rate and can be adjusted so that the in-phase clock is exactly centered in the error-free phase range of the retiming flip-flop.

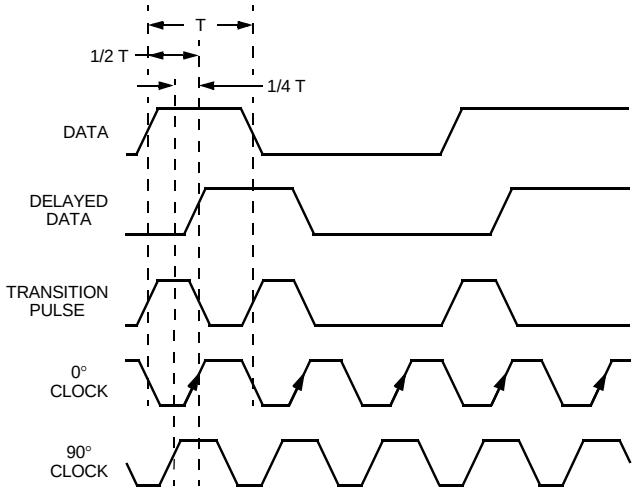

12-3227(F)r.2

Figure 4. Timing Diagram

Theory of Operation (continued)

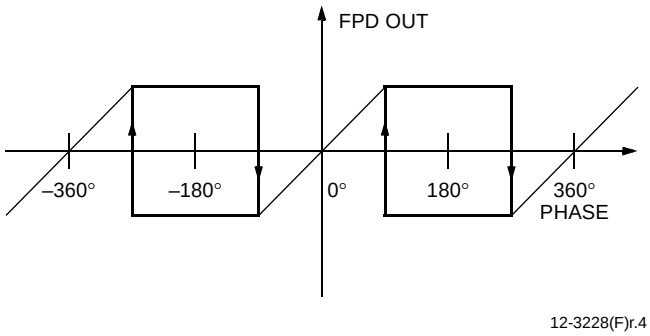

Figure 5. Frequency and Phase Detector Characteristics

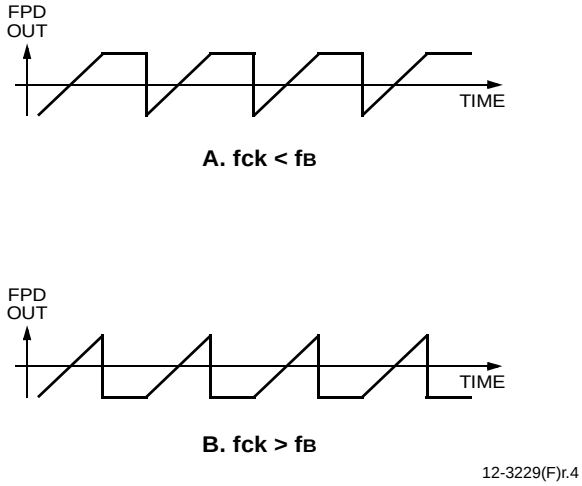

Figure 6. Frequency Detector Operation

The frequency detector is not a separate function but an integral part of the phase-lock loop. Any transition between frequency and phase acquisition is completely avoided. Figure 5 shows the output characteristics of the FPD, which is essentially an extended range phase detector. The two quadrature clock phases are used to produce hysteresis, which extends the phase detector range to ±270°. The extended range gives the phase detector a static frequency sensitivity as demonstrated in Figure 6. For clock frequencies lower than the bit rate (the phase is increasing), the top trajectory of the diagram in Figure 6 is followed. When the VCO frequency exceeds the bit rate, the lower trajectory applies. Since the linear part of the phase detector produces a net-zero output, in the first instance, positive pulses are fed into the loop filter increasing the VCO frequency, while in the latter case, the FPD produces negative pulses.

The wide, 540° range of the phase detector is also responsible for the high jitter tolerance of the LG1600FXH and an associated immunity to cycle slip under high jitter conditions. The clock can be momentarily misaligned as much as 270° but still return to its original position. This property is extremely important in synchronous systems, since a cycle slip would cause misalignment of the demultiplexer following the circuit resulting in a loss of frame condition. The LG1600FXH can handle bit error rates up to $1e^{-3}$ as a result of low-frequency jitter.

PLL Dimensioning

The LG1600FXH CDR employs a heavily damped second order phase-lock loop. A linear model of this PLL is depicted in Figure 7. The conventional second-order equation describing the jitter transfer of the PLL is shown below:

$$H(s) = \frac{\varphi_o}{\varphi_i}(s) = \frac{2\varsigma\omega_n s + \omega_n^2}{s^2 + 2\varsigma\omega_n s + \omega_n^2}$$

where φ_i and φ_o denote the input and output phase, respectively, ς is the PLL damping ratio and ω_n is the natural frequency. For most clock recovery applications a very high damping is required, that renders the PLL essentially as a first-order system with a slight peaking that is generally undesirable. The second-order equation above does not provide much insight into the peaking and bandwidth parameters.

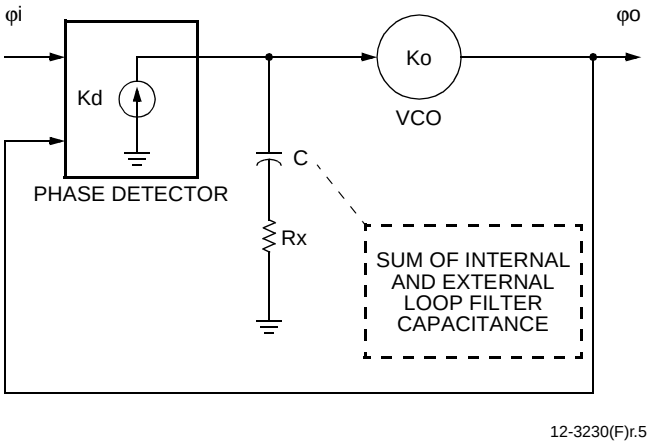

Figure 7. Phase-Lock Loop Linear Model

Theory of Operation (continued)

A more useful expression of the PLL characteristics is the following*:

$$H(s) = \frac{\omega_b\left(1 + \frac{1}{s\tau}\right)}{s + \omega_b\left(1 + \frac{1}{s\tau}\right)}$$

The jitter transfer is now directly expressed in the physical loop gain pole product, ω_b, and the loop filter time constant, τ. Damping ratio, ς, and natural frequency, ω_n, simply relate to these two parameters as follows:

$$\varsigma = 0.5\sqrt{\omega_b\tau}$$

and

$$\omega_n = \sqrt{\omega_n/\tau}$$

For moderate damping $\varsigma > 2.5$ ($\omega_b\tau < 0.1$), the –3 dB bandwidth of the PLL can be approximated by the loop gain pole product:

$$J_{BW} \approx \omega_b = K_d R_x K_o$$

while the jitter peaking can be expressed in terms of the product of PLL bandwidth and loop filter time constant:

$$|H(s)|_{max} \approx 1 + \frac{1}{\omega_b\tau} = 1 + \frac{1}{R_x^2 C K_d K_o}$$

As the last two expressions make clear, the PLL bandwidth is controlled by the value of the external resistor (see Figure 8), while the peaking depends both on the resistor value (quadratically) and total loop filter capacitance.

* Wolaver, D.H., *Phase-Locked Loop Circuit Design*, Prentice Hall, 1991.

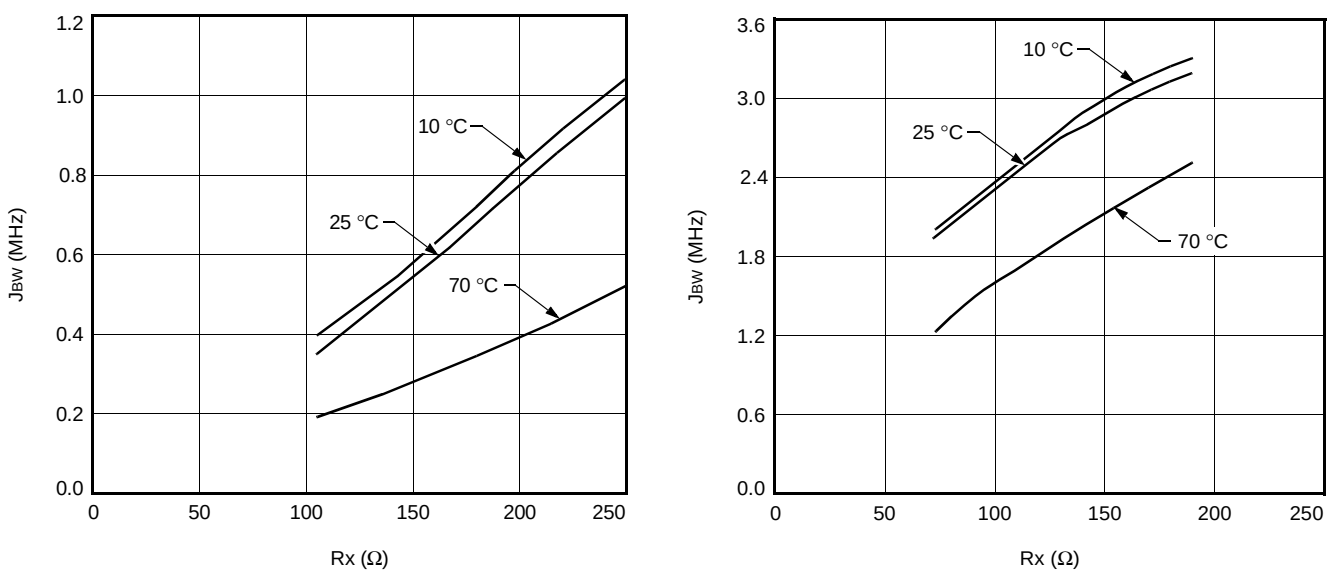

A. LG1600FXH0622 (Cx = 0.15 µF)

B. LG1600FXH2488 (Cx = 0)

12-3231(F)r.4—12-3232(F)r.4

Figure 8. Jitter Bandwidth vs. External Resistor Value

Pin Information

The pinout for the LG1600FXH is shown in Figure 9.

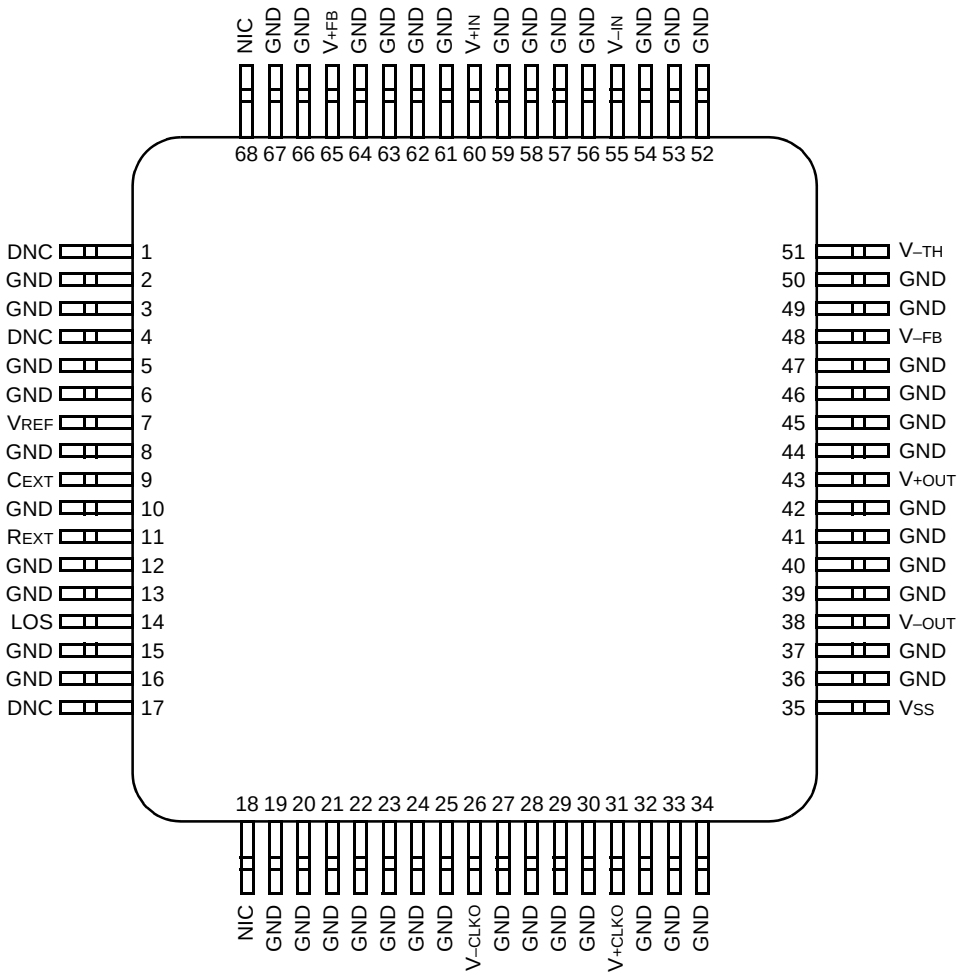

Figure 9. Pin Diagram

Pin Information (continued)

The pin descriptions for the LG1600FXH are given in Table 1.

Table 1. Pin Descriptions

Pin	Symbol	Name/Description
1, 4, 17	DNC	**Do Not Connect.** Internal test point or reserved for future use.
7	V_{REF}	**Reference Voltage.** Nominally –3.2 V. Can be used to bias LG1605DXB (see data sheet). Load ≥10 kΩ.
9	C_{EXT}	Terminal for optional external capacitor to increase PLL damping (normally not connected).
11	R_{EXT}	Terminal for external resistor to set PLL bandwidth (Required).
14	LOS	**Loss of Signal Indicator.** Provides approximately 1 mA sink current with data signal present, can interface to CMOS, TTL when connected to logic V_{DD} through a 10 kΩ resistor. Normally grounded when not used.
26	V_{-CLKO}	**Recovered Clock Out.** ac couple or terminate into 50 Ω to GND.
31	V_{+CLKO}	**Recovered Clock Out.** ac couple or terminate into 50 Ω to GND.
35	V_{SS}	**Supply Voltage.** –5.2 Vdc nominal. **Warning: Connecting a positive voltage to this pin will permanently damage the device.**
38	V_{-OUT}	**Regenerated Data Out.** ac couple or terminate into 50 Ω to GND.
43	V_{+OUT}	**Regenerated Data Out.** ac couple or terminate into 50 Ω to GND.
48	V_{-FB}	**dc Feedback Voltage.** Connect to V_{-TH}.
51	V_{-TH}	**Input Threshold Voltage.** Connect to V_{-FB}.
55	V_{-IN}	**Negative Data Input.** Internally ac coupled.
60	V_{+IN}	**Positive Data Input.** Internally ac coupled.
65	V_{+FB}	**dc Feedback Voltage.** Internally connected; not normally used.
18, 68	NIC	**No Internal Connection.** May be grounded.
2, 3, 5, 6, 8, 10, 12, 13, 15, 16, 19, 20, 21, 22, 23, 24, 25, 27, 28, 29, 30, 32, 33, 34, 36, 37, 39, 40, 41, 42, 44, 45, 46, 47, 49, 50, 52, 53, 54, 56, 57, 58, 59, 61, 62, 63, 64, 66, 67	GND	**Ground.** Connect to top ground plane of coplanar/microstrip circuit board.
Body	GND	**Ground.** Does not need to be connected. GND pins provide all necessary ground connections.

Absolute Maximum Ratings

Stresses in excess of the absolute maximum ratings can cause permanent or latent damage to the device. These are absolute stress ratings only. Functional operation of the device is not implied at these or any other conditions in excess of those given in the operational sections of the data sheet. Exposure to absolute maximum ratings for extended periods can adversely affect device reliability.

Table 2. Absolute Maximum Ratings

Parameter	Min	Max	Unit
Supply Voltage Range (V_{SS})	–7	0.5	V
Loss of Signal Bias Voltage (V_{DD})	—	7	V
Power Dissipation	—	2	W
Voltage (all pins)	V_{SS}	0.5	V
Transient Voltage to ac Couple Pins ($V_{\pm IN}$, R_{EXT})	—	±3	V
Storage Temperature Range	–40	125	°C
Operating Temperature Range	–40	100	°C

Recommended Operating Conditions

Table 3. Recommended Operating Conditions

Parameter	Symbol	Min	Max	Unit
Case Temperature	t_{CASE}	0	70	°C
Power Supply	V_{SS}	–4.7	–5.7	V

Handling Precautions

Although protection circuitry has been designed into this device, proper precautions should be taken to avoid exposure to electrostatic discharge (ESD) during handling and mounting. Lucent Technologies Microelectronics Group employs a human-body model (HBM) for ESD-susceptibility testing and protection design evaluation. The HBM (resistance = 1500 Ω, capacitance = 100 pF) is used. The HBM ESD threshold presented in Table 4 was obtained by using these circuit parameters.

Table 4. ESD Threshold

HBM ESD Threshold	
Device	**Voltage**
LG1600FXH	≥200 V

Mounting and Connections

Certain precautions must be taken when using solder. For installation using a constant temperature solder, temperatures of under 300 °C may be employed for periods of time up to 5 seconds, maximum. For installation with a soldering iron (battery operated or nonswitching only), the soldering tip temperature should not be greater than 300 °C and the soldering time for each lead must not exceed 5 seconds.

Electrical Characteristics

t_{CASE} = 0 °C to 70 °C, V_{SS} = –4.7 V to –5.7 V, V_{DD} = 5 V, bit rate = f_B Gbits/s ±0.05% NRZ and data pattern = 2^{23} – 1 PRBS, 200 mV ≤ $V_{\pm IN}$ ≤ 800 mV, BER < $1e^{-9}$, unless otherwise indicated.

Note: Minimum and maximum values are testing requirements. Typical values are characteristics of the device and are the result of engineering evaluations. Typical values are for information purposes only and are not part of the testing requirements.

Parameter	Symbol	Conditions	Min	Typ	Max	Unit
Data Input Voltage	V_{-IN}	Single ended on either input	200	—	800	mVp-p
Data Input Voltage	$V_{+IN} - V_{-IN}$	Differential	200	—	1600	mVp-p
Data Output Voltage	$V_{\pm OUT}$	ac coupled	625	750	900	mVp-p
Data Output Voltage	$V_{\pm OUT}$	dc coupled	650	800	900	mVp-p
Clock Output Voltage	$V_{\pm CLKO}$	dc coupled	650	750	900	mVp-p
Clock Output Voltage	$V_{\pm CLKO}$	ac coupled; f_B ≤ 3 Gbits/s	625	750	900	mVp-p
Clock Output Voltage	$V_{\pm CLKO}$	ac coupled; f_B > 3 Gbits/s	500	600	900	mVp-p
Output Pulse Width Relative to Bit Period T = 1/f_B	PW%	t_{CASE} = 40 °C	90	100	110	%
Clock Output Duty Cycle	DC_{CLKO}	t_{CASE} = 40 °C	40	—	60	%
Clock/Data Output Transition Time	t_r, t_f	20% to 80%	—	80	100	ps
Maximum Bit Error Rate	BER_{MAX}	Jitter modulation @ f_B × 40 kHz, t_{CASE} = 40 °C	$1e^{-3}$	—	—	—
LOS Output Voltage, Low	V_{LOSL}	R_L = 10 kΩ	–1	–0.8	0.5	V
LOS Output Voltage, High	V_{LOSH}	R_L = 10 kΩ, V_{-IN} = 0 V	V_{DD} – 0.5	V_{DD}	V_{DD}	V
Loss of Signal Delay	τ_{LOS}	Measured from last data transition, t_{CASE} = 40 °C	10	30	100	µs
Jitter Generation	J_{GEN}	—	—	0.005	0.01	UI
Jitter Transfer Bandwidth	J_{BW}	User adjustable with R_X as suggested by Figure 8, t_{CASE} = 25 °C	—	f_B	—	MHz
Output Reference Voltage	V_{REF}	Load to ground ≥ 20 kΩ	–3.4	–3.15	–2.9	V
Jitter Tolerance	J_{TOL}	f_{mod} ≤ f_B x 40 kHz, t_{CASE} = 40 °C	1.5	5	—	UI
		f_B x 40 kHz ≤ f_{mod} ≤ f_B × 400 kHz, t_{CASE} = 40 °C	0.6 f_B/f_{mod}	2 f_B/f_{mod}	—	UI
		f_{mod} ≥ f_B × 400 kHz, t_{CASE} = 40 °C	0.15	0.5	—	UI
Acquisition/Recovery Time	τ_{ACQ}	Measured from first data transition*, t_{CASE} = 40 °C	—	600	800	µs
Supply Current	I_{SS}	–5.7 V ≤ V_{SS} ≤ –4.7 V	—	290	320	mA

* Parameter guaranteed by design or characterization and not production tested.

Test Circuit

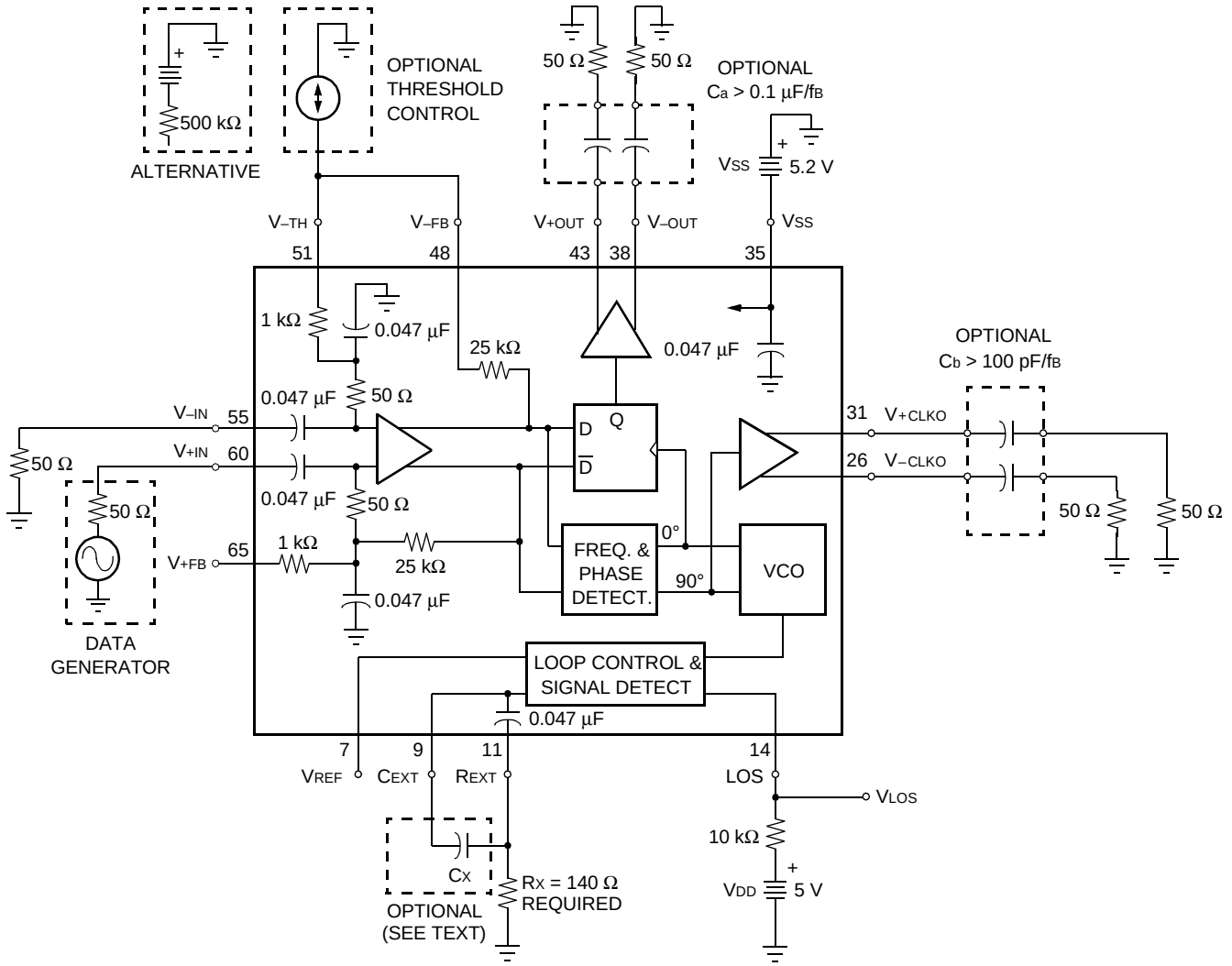

Notes:
Resistor R_X determines the PLL bandwidth and is required for normal operation. The LG1600FXH differs in this respect from the LG1600AXD CDR, which has an internal resistor that sets a minimum bandwidth. The recommended value is 140 Ω for optimal jitter transfer performance. Capacitor C_X is optional and can be used to increase the damping of the PLL in critical applications.

The outputs may be either ac coupled, as indicated, or dc terminated into 50 Ω. In the first case, good output return loss can be obtained. The latter configuration provides a 0 mV to –800 mV output swing for easy interface to dc-coupled circuits.

Figure 10. LG1600FXH Typical Test Circuit

Typical Performance Characteristics

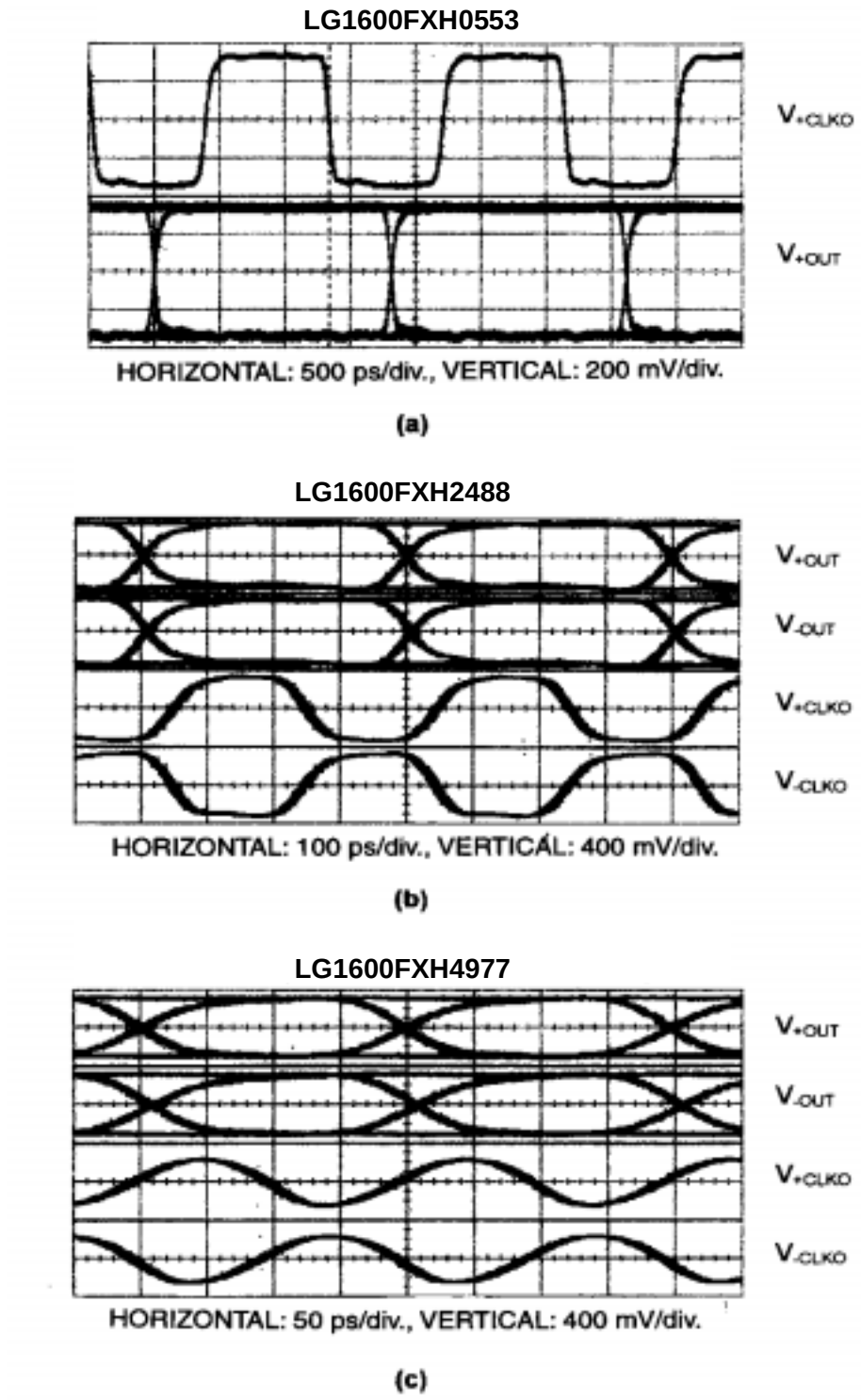

Figure 11. LG1600FXH Typical Eye Patterns

Typical Performance Characteristics (continued)

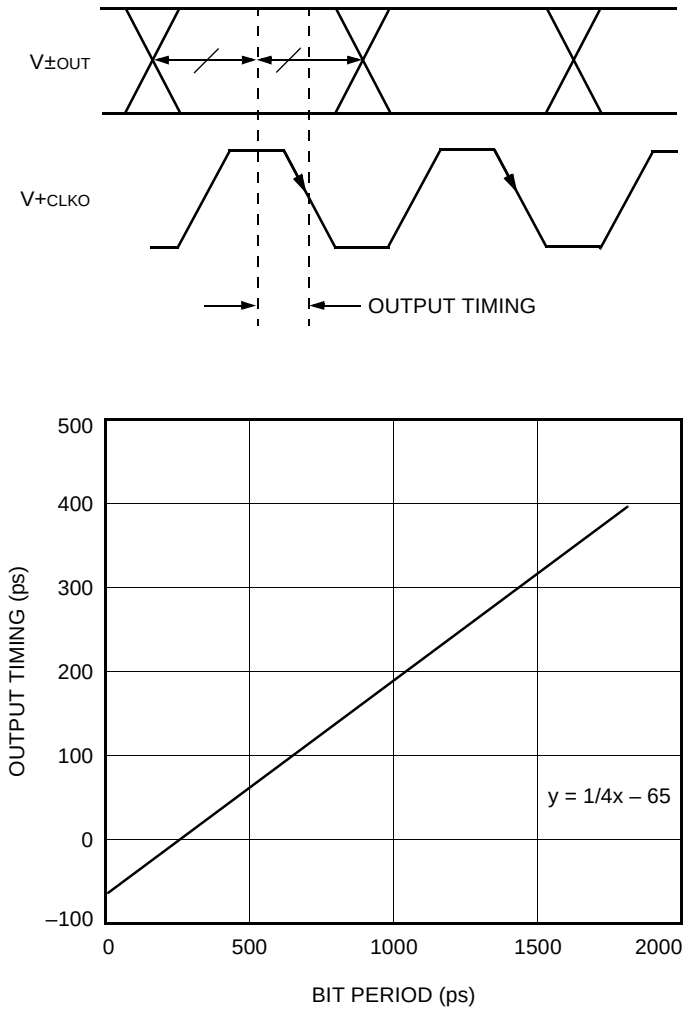

12-3235(F)r.2

Figure 12. Data Clock Output Timing Diagram

Typical Performance Characteristics (continued)

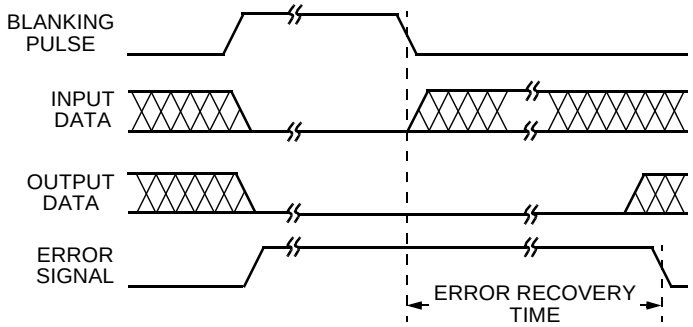

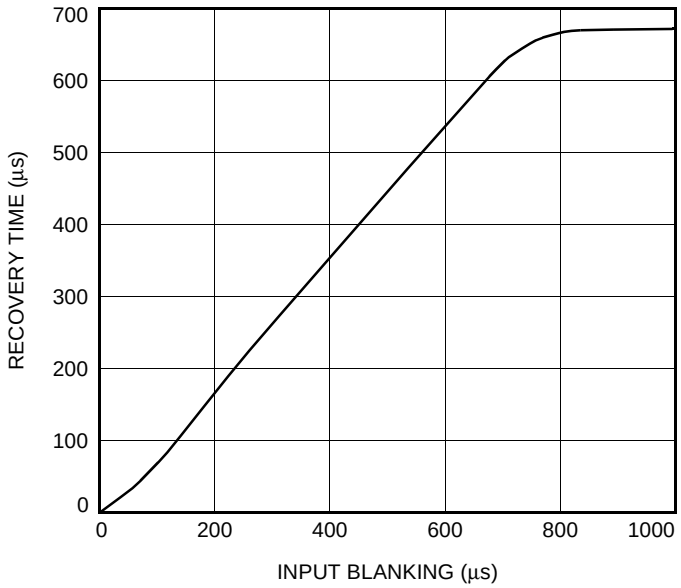

12-3236(F)r.3

Figure 13. Error Recovery Timing Diagram

Typical Performance Characteristics (continued)

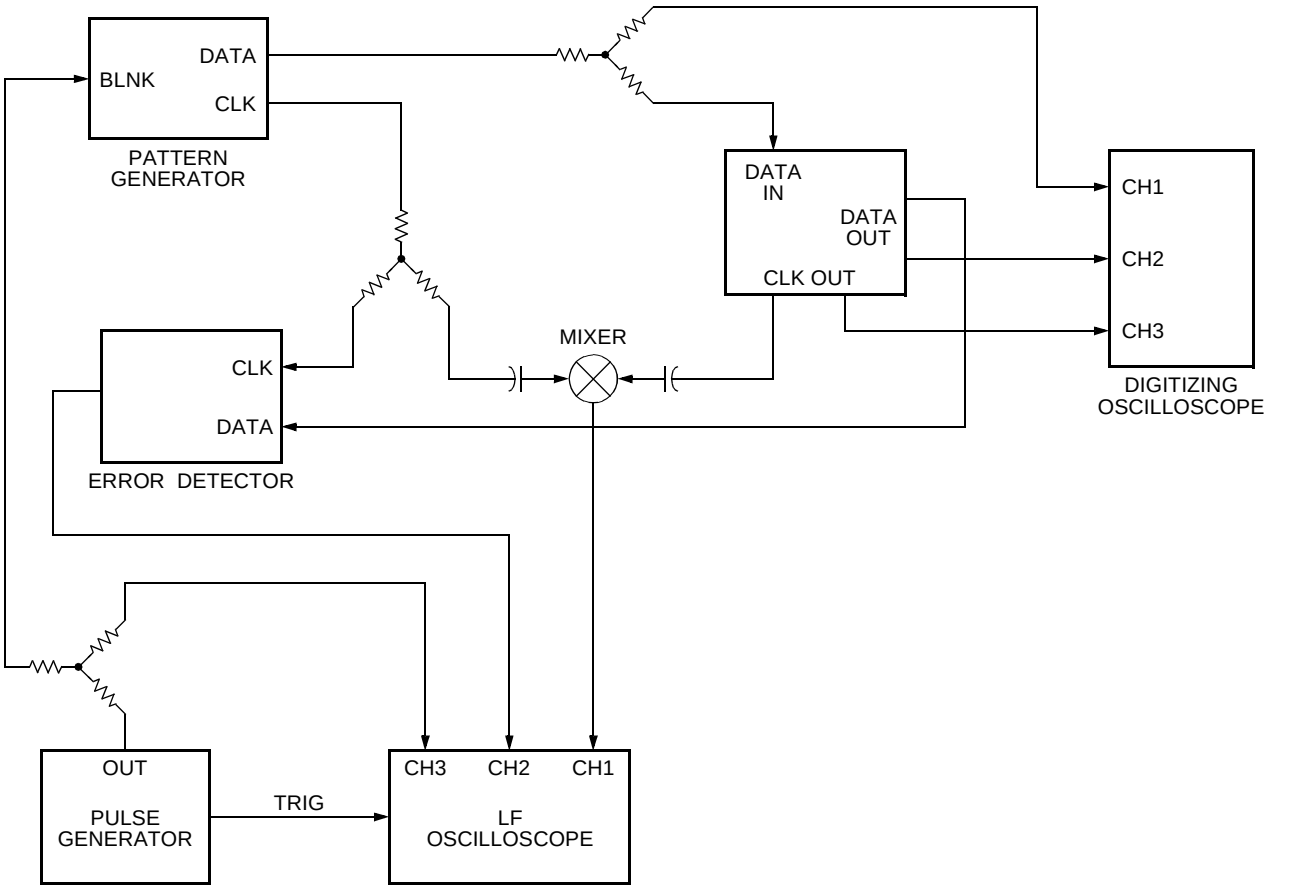

12-3237(F)r.4

Figure 14. Error Recovery Test Circuit

Outline Diagram

68-Pin Surface-Mount Package

Dimensions are in inches.

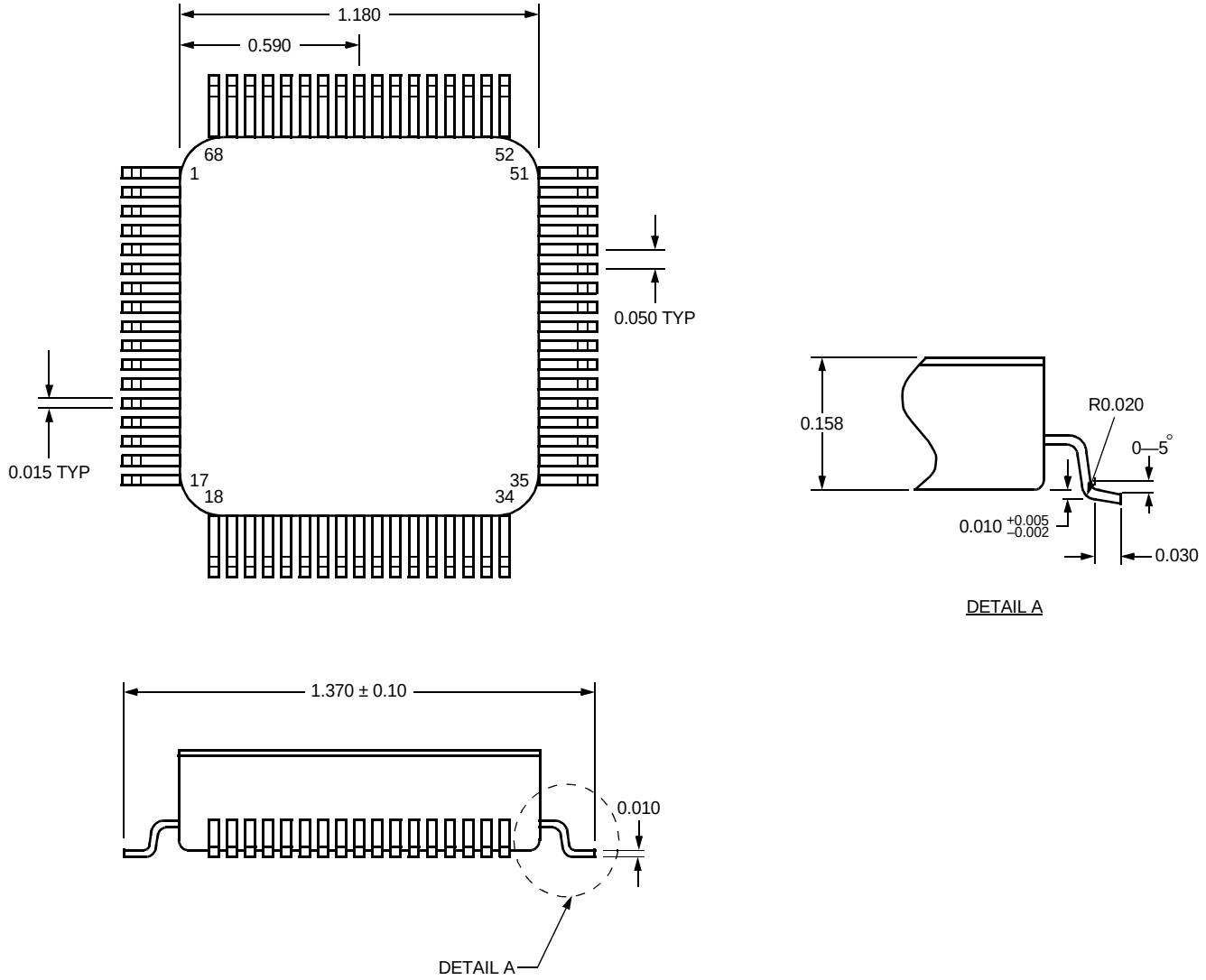

12-3350(F).ar.1

Ordering Information

Device Code	Package	Temperature	Comcode
LG1600FXHXXXX	Surface-Mount Package	0 °C to 70 °C	107236143
LG1600FXH0500	Surface-Mount Package	0 °C to 70 °C	107914038
LG1600FXH0553	Surface-Mount Package	0 °C to 70 °C	107236101
LG1600FXH0622	Surface-Mount Package	0 °C to 70 °C	107339244
LG1600FXH1200	Surface-Mount Package	0 °C to 70 °C	107841447
LG1600FXH1244	Surface-Mount Package	0 °C to 70 °C	107386179
LG1600FXH1298	Surface-Mount Package	0 °C to 70 °C	107236127
LG1600FXH1555	Surface-Mount Package	0 °C to 70 °C	107914046
LG1600FXH2380	Surface-Mount Package	0 °C to 70 °C	107236135
LG1600FXH2433	Surface-Mount Package	0 °C to 70 °C	107645939
LG1600FXH2488	Surface-Mount Package	0 °C to 70 °C	107081879
LG1600FXH2666	Surface-Mount Package	0 °C to 70 °C	107386187
LG1600FXH2949	Surface-Mount Package	0 °C to 70 °C	107385650
LG1600FXH3111	Surface-Mount Package	0 °C to 70 °C	107394132
LG1600FXH3840	Surface-Mount Package	0 °C to 70 °C	107840423
LG1600FXH4977	Surface-Mount Package	0 °C to 70 °C	107081887
LG1600FXH5332	Surface-Mount Package	0 °C to 70 °C	107081895
TF1004A	Test Fixture	—	106497621

Appendix

The test fixture mentioned in the data sheet is sold separately and is described in detail below.

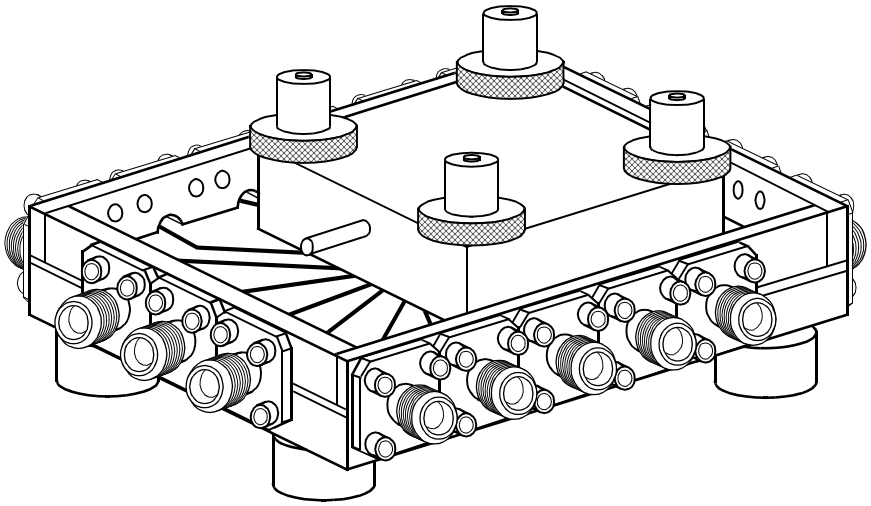

5-7831(F)

Figure 15. TF1004A Test Fixture

TF1004A Test Fixture Features

- SMA connectors
- Easy package placement
- Good RF performance

Test Fixture Functional Description

The TF1004A test fixture is used to characterize 68-pin surface-mount packages for high-speed fiber-optic communications. The fixture consists of a metallized substrate (PTFE filled material) fastened to a brass base with RF connectors and mounting hardware for the package. The package leads make contact to the circuit traces on the fixture through use of a pressure ring and four finger nuts.

The TF1004A is preassembled and fully tested prior to shipment.

Before Use of Test Fixture

- Due to possible stress during shipment, SMA connectors may be misaligned.
- Check each SMA for continuity.
- If necessary, realign and retighten with a 5/64 in. hex key wrench.

Appendix (continued)

Instructions for Use of Test Fixture

A pair of flat-tip tweezers can be used to insert or remove a package from the test fixture. Always wear a grounding strap to prevent ESD.

1. To insert a package, remove the four finger nuts and gently lift the pressure ring off of the test fixture.
2. Place the pressure ring, cavity side up, on a flat ESD safe surface.
3. Connect the metal tube to any general-purpose vacuum source with flexible tubing. The vacuum source should be off.
4. Place the package, lid down, on a flat ESD safe surface. Locate pin 1 on the package.
5. Insert the package into the pressure ring (lid down) with pin 1 located next to the orientation mark and turn on the vacuum. The vacuum will retain the package in the pressure ring during the following steps.
6. Align the vertically conductive material on the circuit board.
7. Place the pressure ring down over the alignment pins and gently tighten the finger nuts.
8. Remove vacuum, if desired. The vacuum source tubing can be removed for convenience.

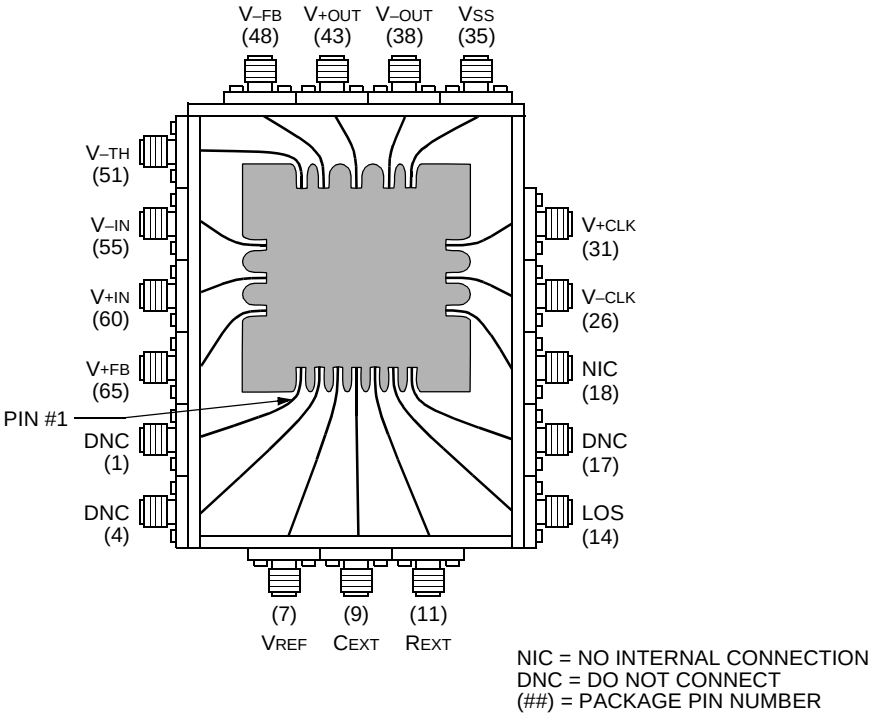

5-7832(F)r.1

Figure 16. TF1004A Connector Assignment

Notes

For additional information, contact your Microelectronics Group Account Manager or the following:
INTERNET: **http://www.lucent.com/micro**
E-MAIL: **docmaster@micro.lucent.com**
N. AMERICA: Microelectronics Group, Lucent Technologies Inc., 555 Union Boulevard, Room 30L-15P-BA, Allentown, PA 18103
1-800-372-2447, FAX 610-712-4106 (In CANADA: **1-800-553-2448**, FAX 610-712-4106)
ASIA PACIFIC: Microelectronics Group, Lucent Technologies Singapore Pte. Ltd., 77 Science Park Drive, #03-18 Cintech III, Singapore 118256
Tel. (65) 778 8833, FAX (65) 777 7495
CHINA: Microelectronics Group, Lucent Technologies (China) Co., Ltd., A-F2, 23/F, Zao Fong Universe Building, 1800 Zhong Shan Xi Road, Shanghai 200233 P. R. China **Tel. (86) 21 6440 0468**, **ext. 316**, FAX (86) 21 6440 0652
JAPAN: Microelectronics Group, Lucent Technologies Japan Ltd., 7-18, Higashi-Gotanda 2-chome, Shinagawa-ku, Tokyo 141, Japan
Tel. (81) 3 5421 1600, FAX (81) 3 5421 1700
EUROPE: Data Requests: MICROELECTRONICS GROUP DATALINE: **Tel. (44) 7000 582 368**, FAX (44) 1189 328 148
Technical Inquiries: GERMANY: **(49) 89 95086 0** (Munich), UNITED KINGDOM: **(44) 1344 865 900** (Ascot),
FRANCE: **(33) 1 40 83 68 00** (Paris), SWEDEN: **(46) 8 594 607 00** (Stockholm), FINLAND: **(358) 9 4354 2800** (Helsinki),
ITALY: **(39) 02 6608131** (Milan), SPAIN: **(34) 1 807 1441** (Madrid)

Lucent Technologies Inc. reserves the right to make changes to the product(s) or information contained herein without notice. No liability is assumed as a result of their use or application. No rights under any patent accompany the sale of any such product(s) or information.

Copyright © 1999 Lucent Technologies Inc.
All Rights Reserved
Printed in U.S.A.

August 1999
DS99-186HSPL (Replaces DS96-237FCE)

microelectronics group

Lucent Technologies
Bell Labs Innovations

Компания «ЭлектроПласт» предлагает заключение долгосрочных отношений при поставках импортных электронных компонентов на взаимовыгодных условиях!

Наши преимущества:

- Оперативные поставки широкого спектра электронных компонентов отечественного и импортного производства напрямую от производителей и с крупнейших мировых складов;
- Поставка более 17-ти миллионов наименований электронных компонентов;
- Поставка сложных, дефицитных, либо снятых с производства позиций;
- Оперативные сроки поставки под заказ (от 5 рабочих дней);
- Экспресс доставка в любую точку России;
- Техническая поддержка проекта, помощь в подборе аналогов, поставка прототипов;
- Система менеджмента качества сертифицирована по Международному стандарту ISO 9001;
- Лицензия ФСБ на осуществление работ с использованием сведений, составляющих государственную тайну;
- Поставка специализированных компонентов (Xilinx, Altera, Analog Devices, Intersil, Interpoint, Microsemi, Aeroflex, Peregrine, Syfer, Eurofarad, Texas Instrument, Miteq, Cobham, E2V, MA-COM, Hittite, Mini-Circuits,General Dynamics и др.);

Помимо этого, одним из направлений компании «ЭлектроПласт» является направление «Источники питания». Мы предлагаем Вам помощь Конструкторского отдела:

- Подбор оптимального решения, техническое обоснование при выборе компонента;
- Подбор аналогов;
- Консультации по применению компонента;
- Поставка образцов и прототипов;
- Техническая поддержка проекта;
- Защита от снятия компонента с производства.

Как с нами связаться

Телефон: 8 (812) 309 58 32 (многоканальный)
Факс: 8 (812) 320-02-42
Электронная почта: org@eplast1.ru
Адрес: 198099, г. Санкт-Петербург, ул. Калинина, дом 2, корпус 4, литера А.