National Semiconductor

October 1995

74ABT3284
18-Bit Synchronous Datapath Multiplexer

General Description

The 74ABT3284 is a synchronous datapath buffer designed to transmit four 9-bit bytes of data onto one or two 9-bit bytes in 2:1 or 4:1 multiplexed configurations. In addition, the non-inverting transceiver supports bidirectional data transfer in transparent or registered modes. A data byte from any one of the six ports can be stored during transparent operation for later recall. Data input to any port may also be read back to itself for byte manipulation or system self-diagnostic purposes.

The 74ABT3284 is useful for interleaving data in memory applications or for use in bus-to-bus communications where variations in data word length or construction are required.

Features

- Advanced BiCMOS technology provides high speed at low power consumption
- 18-bit 2:1 or 9-bit 4:1 multiplexed modes
- Registered or transparent datapath operation
- Output enables and select lines have the option of being synchronized for pipelined operation
- Independent input, output register and control synchronizing clocks insure maximum timing flexibility
- Independent control signals insure functional flexibility
- Guaranteed simultaneous switching noise level and dynamic threshold performance
- Guaranteed latchup protection
- High impedance glitch free bus loading during entire power up and power down cycle
- Non-destructive hot insertion capability

Commercial	Package Number	Package Description
74ABT3284VJG	VJG100A	100-Lead (14mm x 14mm) Molded Plastic Quad Flatpak, JEDEC

Connection Diagram

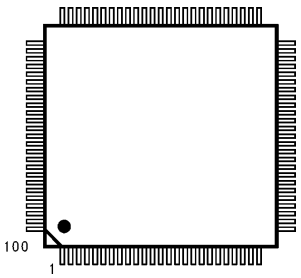

TL/F/11582–1

Pin Assignment

Pin		Pin		Pin		Pin	
1	Mode_SO	26	V_{CC}	51	CP_IN	76	V_{CC}
2	CP_AX	27	A_8	52	$\overline{OEB}$	77	D_8
3	$\overline{OEC}$	28	A_7	53	LDBI	78	D_7
4	LDCI	29	A_6	54	LDBO	79	D_6
5	LDCO	30	GND	55	Mode_W	80	GND
6	SA_2X_1	31	A_5	56	YSEL	81	D_5
7	SA_2X_0	32	A_4	57	$\overline{OEY}$	82	D_4
8	X_0	33	A_3	58	Y_8	83	D_3
9	X_1	34	A_2	59	Y_7	84	D_2
10	GND	35	GND	60	GND	85	GND
11	X_2	36	A_1	61	Y_6	86	D_1
12	X_3	37	A_0	62	Y_5	87	D_0
13	X_4	38	V_{CC}	63	Y_4	88	V_{CC}
14	X_5	39	B_0	64	Y_3	89	C_0
15	X_6	40	B_1	65	Y_2	90	C_1
16	GND	41	GND	66	GND	91	GND
17	X_7	42	B_2	67	Y_1	92	C_2
18	X_8	43	B_3	68	Y_0	93	C_3
19	$\overline{OEX}$	44	B_4	69	LDDO	94	C_4
20	$XSEL_0$	45	B_5	70	LDDI	95	C_5
21	$XSEL_1$	46	GND	71	ASEL1	96	GND
22	LDAO	47	B_6	72	ASEL0	97	C_6
23	LDAI	48	B_7	73	$\overline{OED}$	98	C_7
24	$\overline{OEA}$	49	B_8	74	CP_XA	99	C_8
25	V_{CC}	50	V_{CC}	75	Mode_SC	100	V_{CC}

TRI-STATE® is a registered trademark of National Semiconductor Corporation.

©1995 National Semiconductor Corporation TL/F/11582

RRD-B30M125/Printed in U. S. A.

Functional Description

The 74ABT3284 is a bi-directional registered data-path routing device which can multiplex/de-multiplex four 9-bit ''A-side'' data ports (Ports A, B, C, D) onto/from one 9-bit ''X-side'' port (Port X). Alternatively, it can be configured for mux/demux of two 18-bit data paths (Ports A and C, B and D) onto/from one 18-bit data path (Ports X and Y).

Each of the six 9-bit I/O ports have independent active low TRI-STATE® output enable control logic which can be configured to operate asynchronously or synchronously. With MODE__SO low, direct asynchronous output control is provided. With MODE__SO high, output enable control is asserted synchronously on the positive edge of the CP__IN clock. All I/O port inputs are continuously active allowing output state feedback.

The four A-side ports (A, B, C, D) contain independently enabled input and output data registers for storage of data passing in either direction. The input register (AIR, BIR, CIR, DIR) is loaded/held on the positive edge of CP__AX when the respective Load Control pin (LDAI, LDBI, LDCI, LDDI) is asserted high/low. The Input Registers can be loaded with data from the corresponding A-side port. The output register (AOR, BOR, COR, DOR) is loaded/held on the positive edge of CP__XA when the respective Load Control pin (LDAO, LDBO, LDCO, LDDO) is asserted high/low. The Output Registers can be loaded with data from Port X when MODE__WS is asserted low. When MODE__WS is asserted high, the Output Registers A and C can be loaded with Port X data and the B and D Output Registers can be loaded with data from Port Y.

When routing data from A-side to X-side, Data Path Control is provided for the following options via the SA2X inputs; Transparent mode where Input Register is bypassed but can simultaneously monitor A-side data; Registered Mode where X-side receives data from the selected Input Registers; Readback Mode where X-side receives data from the selected Output Registers. A-side data from Ports A, B, C, or D can be selected to Port X via the XSEL data path select inputs. Ports B or D can be selected to Port Y via the YSEL data path select input.

When routing data from X-side to A-side, Data Path Control is provided for the following options via the ASEL inputs; Transparent mode where Output Register is bypassed but can simultaneously monitor X-side data; Registered Mode where the A-side Port receives data from the corresponding Output Register; Readback Mode where the A-side Port receives data from the corresponding Input Registers. MODE__WS asserted low selects Port X data to be passed to Ports A, B, C, and D. With MODE__WS asserted high, Port X data is passed to Ports A and C with Port Y data passed to Ports B and D.

All Data Path Control Inputs and Input/Output Register Load Enable Inputs are active high and can be asserted asynchronously or synchronously. When MODE__SC is low, these inputs operate asynchronously. When MODE__SC is high, the inputs are asserted synchronously on the positive edge of the CP__IN clock.

When operating the Data Path Control and/or the Output Enable Input groups with MODE__SC and/or MODE__SO ''hard wired'' high for synchronous mode, a single pre-clock of CP__IN will be required following power-up to insure that all internal synchronous control registers are in the appropriate known state. if the application requires ''on the fly''' changes from asynchronous to synchronous operation, then the respective control/enable pin data must be pre-clocked via CP__IN and held steady prior to and during any low to high transition of the MODE__SO or MODE__SC to properly initiate the sync control registers for synchronous control mode.

Pin Descriptions

Pin Name	Description	Operation
$\overline{OEa}$	Output Enable Inputs (Active Low)	Sync/Async
LDaI	Load Enable Inputs for the Input Registers	Sync/Async
LDaO	Load Enable Inputs for the Output Registers	Sync/Async
ASEL(0,1)	A-Side Data Path Select Inputs	Sync/Async
SA2X(0,1)	X-Side Data Path Select Inputs	Sync/Async
XSEL(0,1)	X-Port Data Path Select Inputs	Sync/Async
YSEL	Y-Port Data Path Select Input	Sync/Async
MODE__W	Word Mode Select Input for the X/Y to A-Side Direction	Sync/Async
MODE__SO	Enable Input for Synchronous Output Enable Control	Async
MODE__SC	Enable Input for Synchronous Data Path Control	Async
CP__IN	Clock Input for Synchronous Control (Positive Edge Trigger)	
CP__AX	Clock Input for Input Registers (Positive Edge Trigger)	
CP__XA	Clock Input for Output Registers (Positive Edge Trigger)	

Function Tables

Output Enable Control Table

Inputs			Outputs	Control Mode	Function
$\overline{OE}$ (A, B, C, D, X, Y)	MODE__SO	CP__IN	Port A, B, C, D, X, Y		
L	L	X	ENABLE	ASYNC	ENABLED OUTPUT, I/O input always active
H	L	X	DISABLE	ASYNC	DISABLED OUTPUT, I/O input always active
(Notes 2, 3)	H (Note 1)	↗	(Note 3)	SYNC	(Note 3)

Note 1: Low to High transitions of MODE__SO must be immediately preceeded by a low to high transition (clock edge) on CP__IN while holding Synchronous Control Inputs $\overline{OE}$ (A, B, C, D, X, Y) steady to preset internal registers and assure predictable operation during the control mode change from asynchronous to synchronous.

Note 2: $\overline{OE}$ (A, B, C, D, X, Y) levels are synchronously asserted by the positive transition of CP__IN when MODE__SO is high.

Note 3: Synchronous Control Mode Functions are same as Asynchronous at time T + 1 of CP__IN.

A Side Data Path Select Function Table

Inputs				Data Path		Control Mode	Function
ASEL(1)	ASEL(0)	MODE__SC	CP__IN	From Reg/Port	To Port		
L	L	L	X	(A, B, C, D) IR	A, B, C, D	ASYNC	Readback; Contents of Input Register (A, B, C, D) IR to Port (A, B, C, D)
L	H	L	X	(A, B, C, D) OR	A, B, C, D	ASYNC	Clocked Path; Contents of Output Register (A, B, C, D) OR to Port (A, B, C, D)
H	L	L	X	Port X	A, B, C, & D	ASYNC	Transparent Path; Port X to Port A, B, C, & D
H	H	L	X	Port X Port Y	A & C B & D	ASYNC	Transparent Path; Port X to Port A & C Transparent Path; Port Y to Port B & D
(Notes 2, 3)	(Notes 2, 3)	H (Note 1)	↗	(Note 3)	(Note 3)	SYNC	(Note 3)

Note 1: Low to High transitions of MODE__SC must be immediately preceeded by a low to high transition (clock edge) on CP__IN while holding Synchronous Control Inputs ASEL(0) and ASEL(1) steady to preset internal registers and assure predictable operation during the control mode change from asynchronous to synchronous.

Note 2: ASEL(0) and ASEL(1) levels are synchronously asserted by the positive transition of CP__IN when MODE__SC is high.

Note 3: Synchronous Control Mode Functions are same as Asynchronous at time T + 1 of CP__IN.

Input Register Control Table

Inputs					Register	Control Mode	Function
Port (A, B, C, D)	LD(A, B, C, D) I	MODE__SC	CP__IN	CP__XA	(A, B, C, D) IR		
X	L	L	X	↗	HOLD	ASYNC	HOLD; Input Register holds previous state.
L (H)	H	L	X	↗	L (H)	ASYNC	LOAD; Port A, B, C, D clocked to Input Register (A, B, C, D) IR via CP__AX positive edge
(Note 3)	(Notes 2, 3)	H (Note 1)	↗	(Note 3)	(Note 3)	SYNC	(Note 3)

Note 1: Low to High transitions of MODE__SO must be immediately preceeded by a low to high transition (clock edge) on CP__IN while holding Synchronous Control Inputs LDAI, LDBI, LDCI, and LDDI steady to preset internal registers and assure predictable operation during the control mode change from asynchronous to synchronous.

Note 2: LDAI, LDBI, LDCI and LDDI levels are synchronously asserted by the positive transition of CP__IN when MODE__SC is high.

Note 3: Synchronous Control Mode Functions are same as Asynchronous at time T + 1 of CP__IN.

Function Tables (Continued)

Output Register Control Table

Inputs							Output Register		Control Mode	Function
Port X	**Port Y**	**LD(A, B, C, D) O**	**MODE__W**	**MODE__SC**	**CP__IN**	**CP__XA**	**(A, C) OR**	**(B, D) OR**		
X	X	L	X	L	X	↗	HOLD	HOLD	ASYNC	HOLD OR
L (H)	X	H	L	L	X	↗	L (H)	L (H)	ASYNC	LOAD OR Port X to OR (A, B, C, D)
L (H)	L (H)	H	H	L	X	↗	L (H)	L (H)	ASYNC	LOAD OR Port X to OR (A, C) Port Y to OR (B, D)
(Note 3)	(Note 3)	(Notes 2, 3)	(Notes 2, 3)	H (Note 1)	↗	(Note 3)	(Note 3)	(Note 3)	SYNC	(Note 3)

Note 1: Low to High transitions of MODE__SC must be immediately preceeded by a low to high transition (clock edge) on CP__IN while holding Synchronous Control Inputs LDAO, LDBO, LDCO, LDDO and MODE__W steady to preset internal registers and assure predictable operation during the control mode change from asynchronous to synchronous.

Note 2: LDAO, LDBO, LDCO, LDDO and MODE__W levels are synchronously asserted by the positive transition of CP__IN when MODE__SC is high.

Note 3: Synchronous Control Mode Functions are same as Asynchronous at time T + 1 of CP__IN.

Function Tables (Continued)

1st Level X Side Data Path Select Function Table

Inputs				Data Path		Control Mode	Function
SA2X(1)	SA2X(0)	MODE__SC	CP__IN	From Reg/Port	To Internal Node		
L	L	L	X	A, B, C, D	(A, B, C, D) X	ASYNC	Transparent datapath from Port (A, B, C, D) to internal node (A, B, C, D) X
L	H	L	X	(A, B, C, D) IR	(A, B, C, D) X	ASYNC	Clocked Path; Contents of Input Register (A, B, C, D) IR to internal node (A, B, C, D) X
H	L	L	X	(A, B, C, D) OR	(A, B, C, D) X	ASYNC	Readback; contents of Output register (A, B, C, D) OR to internal node (A, B, C, D) X
H	H	L	X	GND	(A, B, C, D) X	ASYNC	Diagnostic; Select all 36 bits as low and pass to the internal node (A, B, C, D) X
(Notes 2, 3)	(Notes 2, 3)	H (Note 1)	↗	(Note 3)	(Note 3)	SYNC	(Note 3)

Note 1: Low to High transitions of MODE__SC must be immediately preceeded by a low to high transition (clock edge) on CP__IN while holding Synchronous Control Inputs SA2X(0) and SA2X(1) steady to preset internal sync registers and assure predictable operation during the control mode change from asynchronous to synchronous.

Note 2: SA2X(0) and SA2X(1) levels are synchronously asserted by the positive transition of CP__IN when MODE__SC is high.

Note 3: Synchronous Control Mode Functions are same as Asynchronous at time T + 1 of CP__IN.

2nd Level X Side Data Path Select Function Table for Port X

Inputs				Data Path		Control Mode	Function
XSEL(1)	XSEL(0)	MODE__SC	CP__IN	From Internal Node	To Port		
L	L	L	X	AX	X	ASYNC	Internal Node AX to Port X
L	H	L	X	BX	X	ASYNC	Internal Node BX to Port X
H	L	L	X	CX	X	ASYNC	Internal Node CX to Port X
H	H	L	X	DX	X	ASYNC	Internal Node DX to Port X
(Notes 2, 3)	(Notes 2, 3)	H (Note 1)	↗	(Note 3)	(Note 3)	SYNC	(Note 3)

Note 1: Low to High transitions of MODE__SC must be immediately preceeded by a low to high transition (clock edge) on CP__IN while holding Synchronous Control Inputs XSEL(0) and XSEL(1) steady to preset internal sync registers and assure predictable operation during the control mode change from asynchronous to synchronous.

Note 2: XSEL(0) and XSEL(1) levels are synchronously asserted by the positive transition of CP__IN when MODE__SC is high.

Note 3: Synchronous Control Mode Functions are same as Asynchronous at time T + 1 of CP__IN.

2nd Level X Side Data Path Select Function Table for Port Y

Inputs			Data Path		Control Mode	Function
YSEL	MODE__SC	CP__IN	From Internal Node	To Port		
L	L	X	BX	Y	ASYNC	Internal Node BX to Port Y
H	L	X	DX	Y	ASYNC	Internal Node DX to Port Y
(Notes 2, 3)	H (Note 1)	↗	(Note 3)	(Note 3)	SYNC	(Note 3)

Note 1: Low to High transitions of MODE__SC must be immediately preceeded by a low to high transition (clock edge) on CP__IN while holding Synchronous Control Inputs YSEL steady to preset internal registers and assure predictable operation during the control mode change from asynchronous to synchronous.

Note 2: YSEL levels are synchronously asserted by the positive transition of CP__IN when MODE__SC is high.

Note 3: Synchronous Control Mode Functions are same as Asynchronous at time T + 1 of CP__IN.

Logic Diagrams

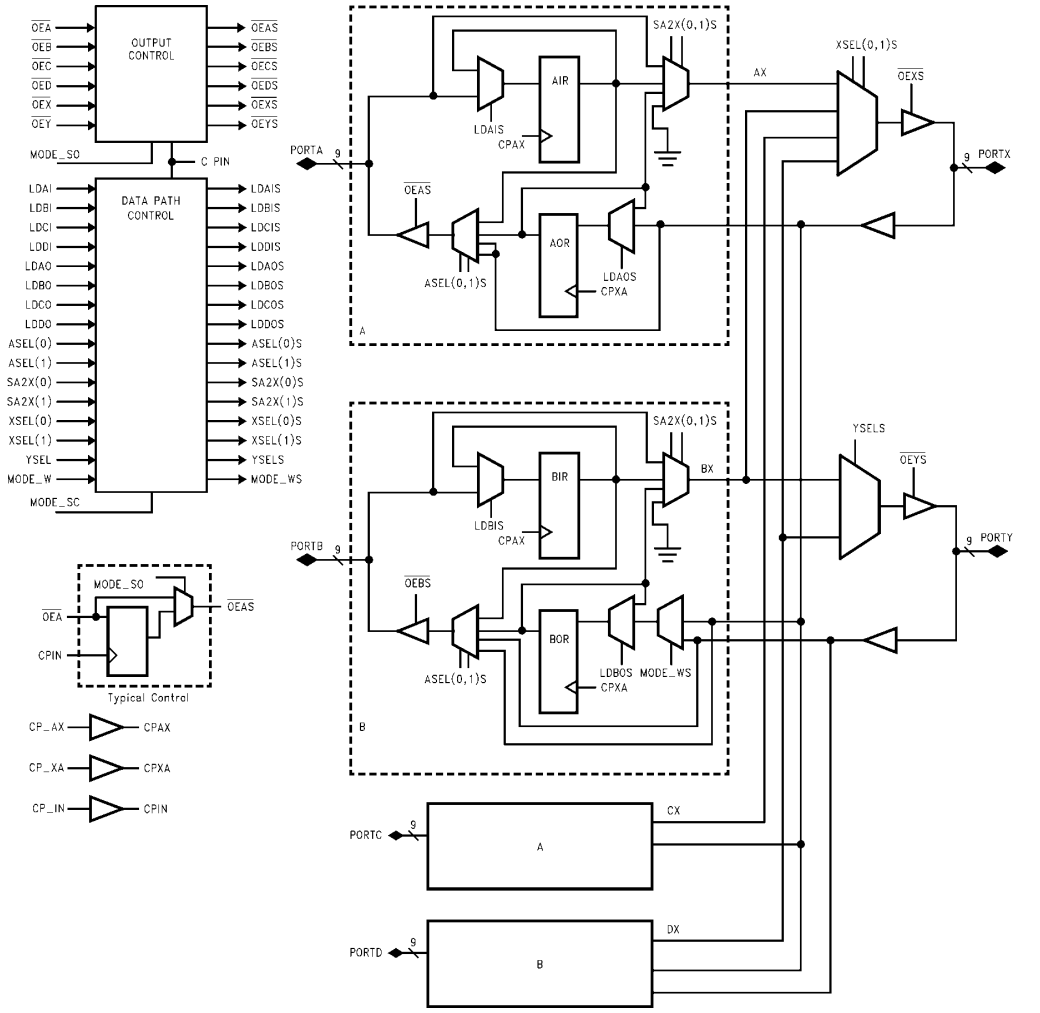

Please note that this diagram is provided only for the understanding of logic operations and should not be used to estimate propagation delays.

FIGURE 1. 18-Bit Synchronous Datapath Multiplexer

Logic Diagrams (Continued)

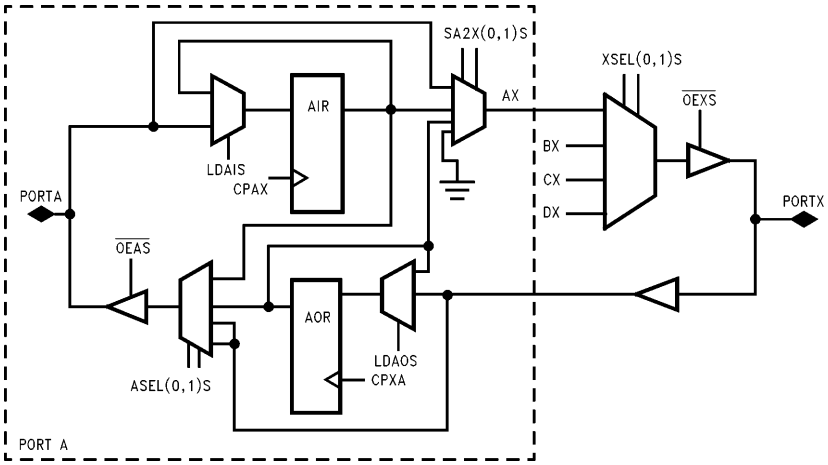

Note: Port C configured identical to Port A.

TL/F/11582–3

FIGURE 2. Synchronous Bus Multiplexer A-X Datapath

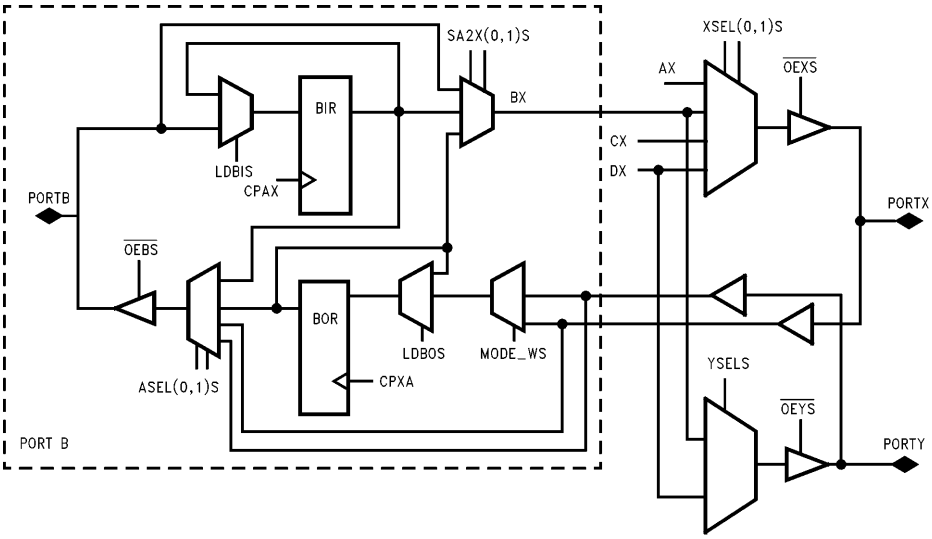

Note: Port D configured identical to Port B.

TL/F/11582–4

FIGURE 3. Synchronous Bus Multiplexer B PORT Datapath

Absolute Maximum Ratings (Note 1)

Storage Temperature	−65°C to +150°C
Ambient Temperature under Bias	−55°C to +125°C
Junction Temperature under Bias	
Ceramic	−55°C to +175°C
Plastic	−55°C to +150°C
V_{CC} Pin Potential to Ground Pin	−0.5V to +7.0V
Input Voltage (Note 2)	−0.5V to +7.0V
Input Current (Note 2)	−30 mA to +5.0 mA
Voltage Applied to Any Output	
in the Disabled or Power-off State	−0.5V to +5.5V
in the HIGH STATE	−0.5V to V_{CC}
Current Applied to Output in LOW State (Max)	twice the rated I_{OL} (mA)
DC Latchup Source Current	−300 mA
Over Voltage Latchup (I/O)	10V

Note 1: Absolute maximum ratings are values beyond which the device may be damaged or have its useful life impaired. Functional operation under these conditions is not implied.

Note 2: Either voltage limit or current limit is sufficient to protect inputs.

Recommended Operating Conditions

Free Air Ambient Temperature	
Commercial	−40°C to +85°C
Supply Voltage	
Commercial	+4.5V to +5.5V
Minimum Input Edge Rate	(ΔV/Δt)
Data Input	50 mV/ns
Enable Input	20 mV/ns
Clock Input	100 mV/ns

DC Electrical Characteristics

Symbol	Parameter	ABT3284			Units	V_{CC}	Conditions
		Min	Typ	Max			
V_{IH}	Input HIGH Voltage	2.0			V		Recognized HIGH Signal
V_{IL}	Input LOW Voltage			0.8	V		Recognized LOW Signal
V_{CD}	Input Clamp Voltage			−1.2	V	Min	I_{IN} = −18 mA
V_{OH}	Output HIGH Voltage	2.5 2.0			V	Min	I_{OH} = −3 mA I_{OH} = −32 mA (Note 3)
V_{OL}	Output LOW Voltage			0.55	V	Min	I_{OL} = 64 mA (Note 4)
I_{IH}	Input HIGH Current			5	μA	Max	V_{IN} = V_{CC}
I_{BVI}	Input HIGH Current Breakdown Test			7	μA	Max	V_{IN} = 7.0V Control Inputs
I_{BVIT}	Input HIGH Current Breakdown Test (I/O)			100	μA	Max	V_{IN} = 5.5V (A_n, B_n, C_n, D_n, X_n, Y_n)
I_{IL}	Input LOW Current			−5	μA	Max	V_{IN} = 0.5V Control Inputs
V_{ID}	Input Leakage Test	4.75			V	0.0	I_{ID} = 1.9 μA Control Inputs All Data Pins Grounded
I_{IH} + I_{OZH}	Output Leakage Current			50	μA	0–5.5	V_{OUT} = 2.7V (A_n, B_n, C_n, D_n, X_n, Y_n) All Output Enables = 2.0V
I_{IL} + I_{OZL}	Output Leakage Current			−50	μA	0–5.5	V_{OUT} = 0.5V (A_n, B_n, C_n, D_n, X_n, Y_n) All Output Enables = 2.0V
I_{OS}	Output Short-Circuit Current	−100		−275	mA	Max	V_{OUT} = 0.0V (A_n, B_n, C_n, D_n, X_n, Y_n) (Note 5)
I_{CEX}	Output High Leakage Current			50	μA	Max	V_{OUT} = V_{CC} (A_n, B_n, C_n, D_n, X_n, Y_n)
I_{ZZ}	Bus Drainage Test			100	μA	0.0	V_{OUT} = 5.5V (A_n, B_n, C_n, D_n, X_n, Y_n)
I_{CCH}	Power Supply Current			2.5	mA	Max	All Outputs HIGH
I_{CCL}	Power Supply Current			140	mA	Max	36 Outputs LOW
I_{CCZ}	Power Supply Current			2.5	mA	Max	Output Enables = V_{CC}; All Others at GND
I_{CCT}	Additional I_{CC}/Input			2.5	mA	Max	V_{IN} = V_{CC} − 2.1V All Others at V_{CC} or GND
I_{CCD}	Dynamic I_{CC} No Load			0.35	mA/MHz	Max	Outputs Open, Transparent Mode Output Enables = GND One Bit Toggling, 50% Duty Cycle

Note 3: Up to 18 outputs can each source 32 mA continuously, or any combination of outputs can source up to a total of 324 mA. For example, 36 outputs can continuously each source 16 mA.

Note 4: Up to 18 outputs can each sink 64 mA continuously, or any combination of outputs can sink up to a total of 648 mA. For example, 36 outputs can continuously each sink 32 mA.

Note 5: One output at a time, duration 1 second maximum.

DC Electrical Characteristics (Continued)

Symbol	Parameter	Min	Typ	Max	Units	V_{CC}	Conditions $C_L = 50$ pF, $R_L = 500\Omega$
V_{OLP}	Quiet Output Maximum Dynamic V_{OL}		0.7	1.0	V	5.0	$T_A = 25°C$ (Note 1)
V_{OLV}	Quiet Output Minimum Dynamic V_{OL}	−0.8	−0.5		V	5.0	$T_A = 25°C$ (Note 1)
V_{OHV}	Minimum High Level Dynamic Output Voltage	2.5	3.0		V	5.0	$T_A = 25°C$ (Note 3)
V_{IHD}	Minimum High Level Dynamic Input Voltage	2.0	1.7		V	5.0	$T_A = 25°C$ (Note 2)
V_{ILD}	Maximum Low Level Dynamic Input Voltage		1.2	0.8	V	5.0	$T_A = 25°C$ (Note 2)

Note 1: Max number of outputs defined as (n). n − 1 data inputs are driven 0V to 3V. One output at LOW. Guaranteed, but not tested.

Note 2: Max number of data inputs (n) switching. n − 1 inputs switching 0V to 3V. Input-under-test switching: 3V to theshold (V_{ILD}), 0V to threshold (V_{IHD}). Guaranteed, but not tested.

Note 3: Max number of outputs defined as (n). n − 1 data inputs are driven 0V to 3V. One output HIGH. Guaranteed, but not tested.

AC Electrical Characteristics Single Output Switching

Symbol	Parameter	74ABT $T_A = 25°C$ $V_{CC} = 5.0V$ $C_L = 50$ pF		74ABT $T_A = -40°C$ to $+85°C$ $V_{CC} = 4.5V$ to $5.5V$ $C_L = 50pF$		Units
		Min	Max	Min	Max	
f_{MAX}	Max Operating Frequency	150				
t_{PHL} t_{PLH}	Propagation Delay A, B, C, D or X Inputs to X or A, B, C, D Outputs. Transparent Mode	1.5	5.5	1.5	5.5	ns
t_{PHL} t_{PLH}	Propagation Delay B, D or Y Inputs to Y or B, D Outputs. Transparent Mode	1.0	5.0	1.0	5.0	ns
t_{PHL} t_{PLH}	Propagation Delay CP__XA ↑ to A, B, C, or D. Registered Mode	1.5	6.0	1.5	6.0	ns
t_{PHL} t_{PLH}	Propagation Delay CP__AX ↑ to X. Registered Mode	1.5	7.0	1.5	7.0	ns
t_{PHL} t_{PLH}	Propagation Delay CP__AX ↑ to Y. Registered Mode	1.5	6.5	1.5	6.5	ns
t_{PHL} t_{PLH}	Propagation Delay ASELn to A, B, C or D. Asynchronous Mode	2.0	7.5	2.0	7.5	ns
t_{PHL} t_{PLH}	Propagation Delay CP__IN ↑ to A, B, C or D. ASELn Synchronous Mode	2.5	8.5	2.5	8.5	ns
t_{PHL} t_{PLH}	Propagation Delay SA2Xn to X or Y. Asynchronous Mode	1.5	7.5	1.5	7.5	ns
t_{PHL} t_{PLH}	Propagation Delay CP__IN ↑ to X or Y. SA2Xn Synchronous Mode	2.0	8.5	2.0	8.5	ns
t_{PHL} t_{PLH}	Propagation Delay XSELn to X. Asynchronous Mode	1.5	6.0	1.5	6.0	ns
t_{PHL} t_{PLH}	Propagation Delay CP__IN ↑ to X. XSELn Synchronous Mode	2.0	7.5	2.0	7.5	ns
t_{PHL} t_{PLH}	Propagation Delay YSELn to Y. Asynchronous Mode	1.0	5.5	1.0	5.5	ns
t_{PHL} t_{PLH}	Propagation Delay CP__IN ↑ to Y. YSELn Synchronous Mode	1.5	6.5	1.5	6.5	ns
t_{PZH} t_{PZL}	Asynchronous Enable Time	1.0	6.0	1.0	6.0	ns
t_{PZH} t_{PZL}	Synchronous Enable Time	1.5	7.0	1.5	7.0	ns
t_{PHZ} t_{PLZ}	Asynchronous Disable Time	1.0	7.5	1.0	7.5	ns
t_{PHZ} t_{PLZ}	Synchronous Disable Time	1.5	8.5	1.5	8.5	ns

AC Operating Requirements Single Output Switching

Symbol	Parameter	74ABT $T_A = 25°C$ $V_{CC} = 5.0V$ $C_L = 50$ pF Min	74ABT $T_A = -40°C$ to $+85°C$ $V_{CC} = 4.5V$ to $5.5V$ $C_L = 50$ pF Max	Units
$t_s(H)$ $t_s(L)$	Setup Time High or Low A, B, C, D X or Y. Data to CP__AX ↑ or CP__XA ↑ (Registered Mode)	4.0	4.0	ns
$t_h(H)$ $t_h(L)$	Hold Time High or Low A, B, C, D X or Y. Data to CP__AX ↑ or CP__XA ↑ (Registered Mode)	0.0	0.0	ns
$t_s(H)$ $t_s(L)$	Setup Time High or Low Control Inputs to CP__IN ↑. (Synchronous Mode)	3.0	3.0	ns
$t_h(H)$ $t_h(L)$	Hold Time High or Low Control Inputs to CP__IN ↑. (Synchronous Mode)	0.0	0.0	ns
$t_s(H)$	Setup Time High, CP__IN ↑ to CP__AX ↑ or CP__XA ↑.	5.0	5.0	ns
$t_h(L)$	Hold Time Low, CP__IN ↑ to CP__AX ↑ or CP__XA ↑.	0.0	0.0	ns
$t_w(H)$ $t_w(L)$	CLK Pulsewidth High CLK Pulsewidth Low	3.0 4.0	3.0 4.0	ns

Capacitance

Symbol	Parameter	Typ	Units	Conditions $T_A = 25°C$
C_{IN}	Input Capacitance	5	pF	$V_{CC} = 0V$ Control Inputs
$C_{I/O}$ (Note 1)	I/O Capacitance	11	pF	$V_{CC} = 5.0V$ (A_n, B_n, C_n, D_n, X_n, Y_n)

Note 1: $C_{I/O}$ is measured at frequency f = 1 MHz, per MIL-STD-883B, Method 3012.

Physical Dimensions inches (millimeters)

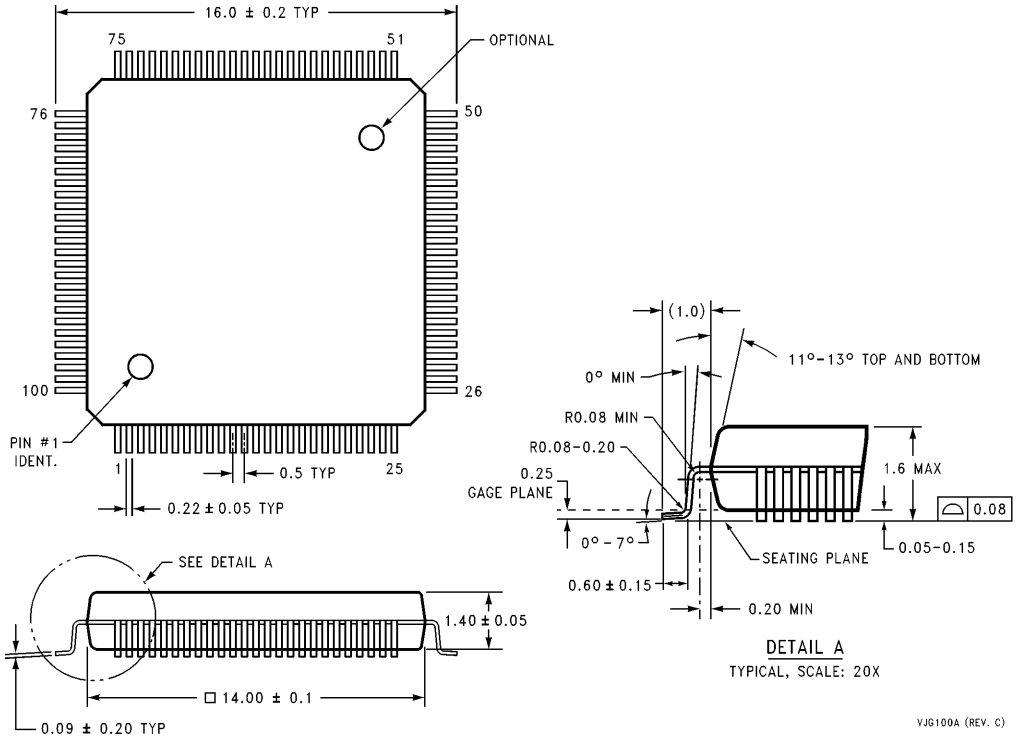

100-Lead Thin Quad Flatpak (TQFP)
NS Package Number VJG100A

LIFE SUPPORT POLICY

NATIONAL'S PRODUCTS ARE NOT AUTHORIZED FOR USE AS CRITICAL COMPONENTS IN LIFE SUPPORT DEVICES OR SYSTEMS WITHOUT THE EXPRESS WRITTEN APPROVAL OF THE PRESIDENT OF NATIONAL SEMICONDUCTOR CORPORATION. As used herein:

1. Life support devices or systems are devices or systems which, (a) are intended for surgical implant into the body, or (b) support or sustain life, and whose failure to perform, when properly used in accordance with instructions for use provided in the labeling, can be reasonably expected to result in a significant injury to the user.
2. A critical component is any component of a life support device or system whose failure to perform can be reasonably expected to cause the failure of the life support device or system, or to affect its safety or effectiveness.

National Semiconductor Corporation
1111 West Bardin Road
Arlington, TX 76017
Tel: 1(800) 272-9959
Fax: 1(800) 737-7018

National Semiconductor Europe
Fax: (+49) 0-180-530 85 86
Email: cnjwge@tevm2.nsc.com
Deutsch Tel: (+49) 0-180-530 85 85
English Tel: (+49) 0-180-532 78 32
Français Tel: (+49) 0-180-532 93 58
Italiano Tel: (+49) 0-180-534 16 80

National Semiconductor Hong Kong Ltd.
13th Floor, Straight Block,
Ocean Centre, 5 Canton Rd.
Tsimshatsui, Kowloon
Hong Kong
Tel: (852) 2737-1600
Fax: (852) 2736-9960

National Semiconductor Japan Ltd.
Tel: 81-043-299-2309
Fax: 81-043-299-2408

National does not assume any responsibility for use of any circuitry described, no circuit patent licenses are implied and National reserves the right at any time without notice to change said circuitry and specifications.

Компания «ЭлектроПласт» предлагает заключение долгосрочных отношений при поставках импортных электронных компонентов на взаимовыгодных условиях!

Наши преимущества:

- Оперативные поставки широкого спектра электронных компонентов отечественного и импортного производства напрямую от производителей и с крупнейших мировых складов;
- Поставка более 17-ти миллионов наименований электронных компонентов;
- Поставка сложных, дефицитных, либо снятых с производства позиций;
- Оперативные сроки поставки под заказ (от 5 рабочих дней);
- Экспресс доставка в любую точку России;
- Техническая поддержка проекта, помощь в подборе аналогов, поставка прототипов;
- Система менеджмента качества сертифицирована по Международному стандарту ISO 9001;
- Лицензия ФСБ на осуществление работ с использованием сведений, составляющих государственную тайну;
- Поставка специализированных компонентов (Xilinx, Altera, Analog Devices, Intersil, Interpoint, Microsemi, Aeroflex, Peregrine, Syfer, Eurofarad, Texas Instrument, Miteq, Cobham, E2V, MA-COM, Hittite, Mini-Circuits,General Dynamics и др.);

Помимо этого, одним из направлений компании «ЭлектроПласт» является направление «Источники питания». Мы предлагаем Вам помощь Конструкторского отдела:

- Подбор оптимального решения, техническое обоснование при выборе компонента;
- Подбор аналогов;
- Консультации по применению компонента;
- Поставка образцов и прототипов;
- Техническая поддержка проекта;
- Защита от снятия компонента с производства.

Как с нами связаться

Телефон: 8 (812) 309 58 32 (многоканальный)
Факс: 8 (812) 320-02-42
Электронная почта: org@eplast1.ru
Адрес: 198099, г. Санкт-Петербург, ул. Калинина, дом 2, корпус 4, литера А.