Low Power Op Amp and Reference

FEATURES

- *Guaranteed* Operation at +1.2V
- Op Amp and Reference on Single Chip
- Low Supply Current 400μA
- Capable of Floating Mode Operation
- Low Reference Drift 20ppm/°C
- Low Offset Voltage
- Output Swings to Within 15mV of Rails

APPLICATIONS

- Remote Signal Conditioner/Transmitter
- Battery Operated Instruments
- Precision Current Regulators
- Precision Voltage Regulators
- Thermocouple Transmitter

DESCRIPTION

The LM10 combines a precision reference, a reference buffer amplifier and an independent, high quality op amp on a single chip. The device is capable of operation from a single supply as low as 1.1V, from dual supplies up to ±20V and typically draws 270μA supply current. Input voltage range for the op amp includes ground, while the unloaded output can swing to within 15mV of each rail. Further, the LM10 will deliver 20mA output current and still swing within ±400mV of the supply rails.

With its low operating current and floating operation capability, the LM10 is ideal for two wire analog transmitter circuits where the processed signal is carried on the same line used for power. The LM10 is suggested for portable battery powered equipment and is fully specified for operation from a single 1.2V battery. Other applications include precision current and voltage regulators, operating from very low voltages to several hundred volts.

+1.5V to +5V Converter

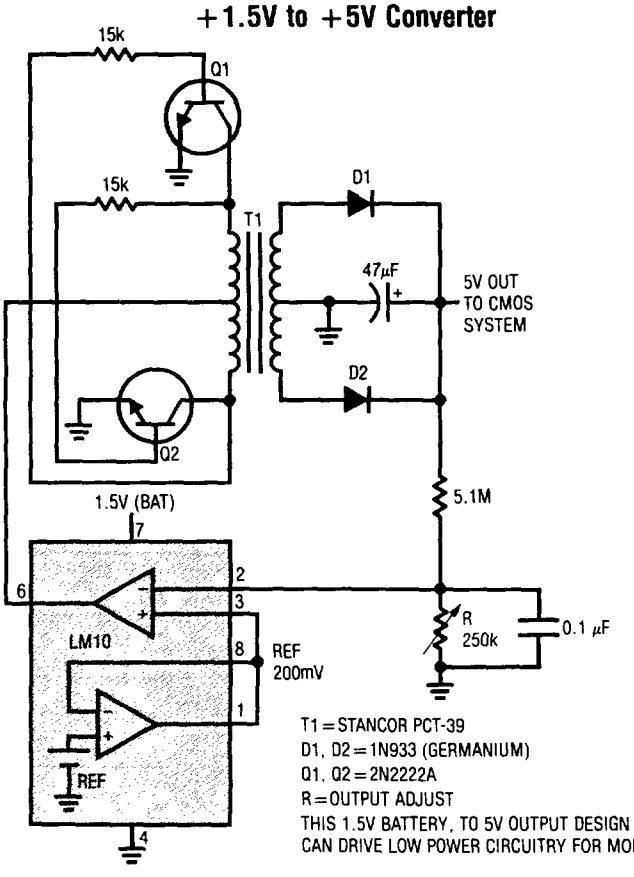

T1 = STANCOR PCT-39
D1, D2 = 1N933 (GERMANIUM)
Q1, Q2 = 2N2222A
R = OUTPUT ADJUST
THIS 1.5V BATTERY, TO 5V OUTPUT DESIGN CAN DRIVE LOW POWER CIRCUITRY FOR MONTHS.

Line Regulation

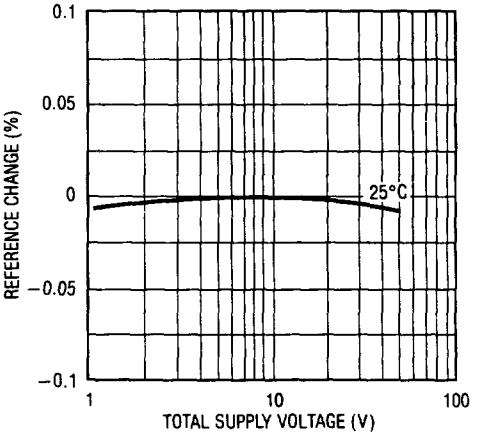

ABSOLUTE MAXIMUM RATINGS

Total Supply Voltage
- LM10/LM10B/LM10C 45V
- LM10BL/LM10CL 7V

Differential Input Voltage (Note 1)
- LM10/LM10B/LM10C ..... ±40V
- LM10BL/LM10CL ..... ±7V

Output Short Circuit Duration ..... Indefinite

Operating Temperature Range (Note 2)
- LM10 ..... $-55°C \le T_A \le 125°C$
- LM10B/LM10BL ..... $-25°C \le T_A \le 85°C$
- LM10C/LM10CL ..... $0°C \le T_A \le 70°C$

Storage Temperature Range .... $-65°C \le T_A \le 150°C$

Lead Temperature (Soldering, 10 sec.) ..... 300°C

PACKAGE/ORDER INFORMATION

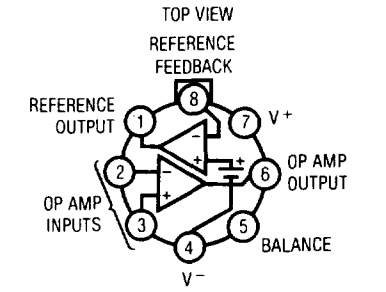

METAL CAN H PACKAGE

ORDER PART NUMBER: LM10H, LM10BH, LM10CH, LM10BLH, LM10CLH

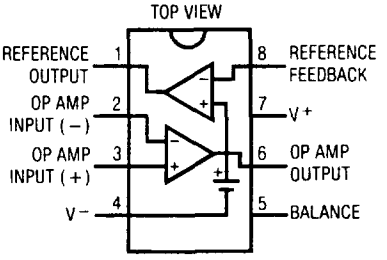

J8 HERMETIC PACKAGE
N8 PLASTIC DIP PACKAGE

ORDER PART NUMBER: LM10CN8, LM10CLN8, LM10CJ8, LM10CLJ8, LM10J8, LM10BJ8, LM10BLJ8

OP AMP ELECTRICAL CHARACTERISTICS (Note 3)

SYMBOL	PARAMETER	CONDITIONS		LM10/LM10B MIN	LM10/LM10B TYP	LM10/LM10B MAX	LM10C MIN	LM10C TYP	LM10C MAX	UNITS
V_{OS}	Input Offset Voltage				0.3	2.0		0.5	4.0	mV
			●			3.0			5.0	mV
$\frac{\Delta V_{OS}}{\Delta Temp}$	Average Offset Voltage Drift		●		2.0			5.0		μV/°C
I_{OS}	Input Offset Current	(Note 4)			0.25	0.7		0.4	2.0	nA
			●			1.5			3.0	nA
$\frac{\Delta I_{OS}}{\Delta Temp}$	Offset Current Drift		●		2.0			5.0		pA/°C
I_B	Input Bias Current				10	20		12	30	nA
			●			30			40	nA
$\frac{\Delta I_B}{\Delta Temp}$	Bias Current Drift		●		60			90		pA/°C
A_{VOL}	Large Signal Voltage Gain	$V_S = \pm 20V$, $I_{OUT} = 0$, $V_{OUT} = \pm 19.95V$		120	400		80	400		V/mV
			●	80			50			V/mV
		$V_S = \pm 20V$, $V_{OUT} = \pm 19.4V$ $I_{OUT} = \pm 20mA$		50	130		25	130		V/mV
		$I_{OUT} = \pm 15mA$	●	20			15			V/mV
		$V_S = \pm 0.6V$, $I_{OUT} = \pm 2mA$ $V_{OUT} = \pm 0.4V$, $V_{CM} = -0.4V$		1.5	3.0		1.0	3.0		V/mV
		$V_S = \pm 0.65V$, $I_{OUT} = \pm 2mA$ $V_{OUT} = \pm 0.3V$, $V_{CM} = -0.4V$	●	0.5			0.75			V/mV
	Shunt Gain (Note 5)	$0.1mA \le I_{OUT} \le 5mA$, $R_L = 1.1k\Omega$ $1.2V \le V_{OUT} \le 40V$		14	33		10	33		V/mV
		$1.3V \le V_{OUT} \le 40V$	●	6			6			V/mV
		$0.1mA \le I_{OUT} \le 20mA$, $R_L = 250\Omega$ $1.5V \le V^+ \le 40V$		8	25		6	25		V/mV
			●	4			4			V/mV

OP AMP ELECTRICAL CHARACTERISTICS (Note 3)

SYMBOL	PARAMETER	CONDITIONS		LM10/LM10B MIN	LM10/LM10B TYP	LM10/LM10B MAX	LM10C MIN	LM10C TYP	LM10C MAX	UNITS
CMRR	Common-Mode Rejection Ratio	$V_S = \pm 20V$								
		$-20V \le V_{CM} \le 19.15V$		93	102		90	102		dB
		$-20V \le V_{CM} \le 19V$	●	87			87			dB
PSRR	Power Supply Rejection Ratio	$-0.2V \ge V^- \ge -39V$								
		$V^+ = 1.0V$		90	96		87	96		dB
		$V^+ = 1.1V$	●	84			84			dB
		$V^- = -0.2V$								
		$1.0V \le V^+ \le 39.8V$		96	106		93	106		dB
		$1.1V \le V^+ \le 39.8V$	●	90			90			dB
R_{IN}	Input Resistance	(Note 6)		250	500		150	400		kΩ
			●	150			115			kΩ
I_S	Supply Current				270	400		300	500	μA
			●			500			570	μA
ΔI_S	Supply Current Change	$1.2V \le V_S \le 40V$			15	75		15	75	μA
		$1.3V \le V_S \le 40V$	●			75			75	μA

REFERENCE AMPLIFIER ELECTRICAL CHARACTERISTICS (Note 3)

SYMBOL	PARAMETER	CONDITIONS		LM10/LM10B MIN	LM10/LM10B TYP	LM10/LM10B MAX	LM10C MIN	LM10C TYP	LM10C MAX	UNITS
V_{REF}	Feedback Sense Voltage	Voltage at Pin 1 with Pin 1 Connected to Pin 8		195	200	205	190	200	210	mV
			●	194	200	206	189	200	211	mV
$\frac{\Delta V_{REF}}{\Delta Temp}$	Reference Drift		●		0.002			0.003		%/°C
	Feedback Current	Current into Pin 8			20	50		22	75	nA
			●			65			90	nA
	Line Regulation	$0 \le I_{REF} \le 1mA$, $V_{REF} = 200mV$								
		$1.2V \le V_S \le 40V$			0.001	0.003		0.001	0.008	%/V
		$1.3V \le V_S \le 40V$	●		0.001	0.006		0.001	0.01	%/V
	Load Regulation	$0 \le I_{REF} \le 1mA$								
		$V^+ - V_{REF} \ge 1.0V$			0.01	0.1		0.01	0.15	%
		$V^+ - V_{REF} \ge 1.1V$	●		0.01	0.15		0.01	0.20	%
	Reference Amplifier Gain	$0.2V \le V_{REF} \le 35V$		50	75		25	70		V/mV
			●	23			15			V/mV

2

OP AMP ELECTRICAL CHARACTERISTICS (Note 3)

SYMBOL	PARAMETER	CONDITIONS		LM10BL MIN	LM10BL TYP	LM10BL MAX	LM10CL MIN	LM10CL TYP	LM10CL MAX	UNITS
V_{OS}	Input Offset Voltage				0.3	2.0		0.5	4.0	mV
			●			3.0			5.0	mV
$\frac{\Delta V_{OS}}{\Delta Temp}$	Average Offset Voltage Drift		●		2.0			5.0		μV/°C
I_{OS}	Input Offset Current	(Note 4)			0.1	0.7		0.2	2.0	nA
			●			1.5			3.0	nA
$\frac{\Delta I_{OS}}{\Delta Temp}$	Offset Current Drift		●		2.0			5.0		pA/°C
I_B	Input Bias Current				10	20		12	30	nA
			●			30			40	nA
$\frac{\Delta I_B}{\Delta Temp}$	Bias Current Drift		●		60			90		pA/°C
A_{VOL}	Large Signal Voltage Gain	$V_S = \pm 3.25V$, $I_{OUT} = 0$, $V_{OUT} = \pm 3.2V$		60	300		40	300		V/mV
			●	40			25			V/mV
		$V_S = \pm 3.25V$, $V_{OUT} = \pm 2.75V$ $I_{OUT} = \pm 10mA$		10	25		5	25		V/mV
			●	4			3			V/mV
		$I_{OUT} = \pm 2mA$, $V_{CM} = -0.4V$ $V_S = \pm 0.6V$, $V_{OUT} = \pm 0.4V$		1.5	3.0		1.0	3.0		V/mV
		$V_S = \pm 0.65V$, $V_{OUT} = \pm 0.3V$	●	0.5			0.75			V/mV
	Shunt Gain (Note 5)	$0.1mA \le I_{OUT} \le 10mA$, $R_L = 500\Omega$ $1.5V \le V^+ \le 6.5V$		8	30		6	30		V/mV
			●	4			4			V/mV
CMRR	Common-Mode Rejection Ratio	$V_S = \pm 3.25V$ $-3.25V \le V_{CM} \le 2.4V$		89	102		80	102		dB
		$-3.25V \le V_{CM} \le 2.25V$	●	83			74			dB
PSRR	Power Supply Rejection Ratio	$-0.2V \ge V^- \ge -5.4V$ $V^+ = 1.0V$		86	96		80	96		dB
		$V^+ = 1.2V$	●	80			74			dB
PSRR		$V^- = -0.2V$ $1.0V \le V^+ \le 6.3V$		94	106		80	106		dB
		$1.1V \le V^+ \le 6.3V$	●	88			74			dB
R_{IN}	Input Resistance	(Note 6)		250	500		150	400		kΩ
			●	150			115			kΩ
I_S	Supply Current				260	400		280	500	μA
			●			500			570	μA

REFERENCE AMPLIFIER ELECTRICAL CHARACTERISTICS (Note 3)

SYMBOL	PARAMETER	CONDITIONS		LM10BL MIN	LM10BL TYP	LM10BL MAX	LM10CL MIN	LM10CL TYP	LM10CL MAX	UNITS
V_{REF}	Feedback Sense Voltage	Voltage at Pin 1 with Pin 1 Connected to Pin 8		195	200	205	190	200	210	mV
			●	194	200	206	189	200	211	mV
$\frac{\Delta V_{REF}}{\Delta Temp}$	Reference Drift		●		0.002			0.003		%/°C
	Feedback Current	Current into Pin 8			20	50		22	75	nA
			●			65			90	nA
	Line Regulation	$0 \le I_{REF} \le 0.5mA$, $V_{REF} = 200mV$								
		$1.2V \le V_S \le 6.5V$			0.001	0.01		0.001	0.02	%/V
		$1.3V \le V_S \le 6.5V$	●		0.001	0.02		0.001	0.03	%/V
	Load Regulation	$0 \le I_{REF} \le 0.5mA$								
		$V^+ - V_{REF} \ge 1.0V$			0.01	0.1		0.01	0.15	%
		$V^+ - V_{REF} \ge 1.1V$	●		0.01	0.15		0.01	0.20	%
	Reference Amplifier Gain	$0.2V \le V_{REF} \le 5.5V$		30	70		20	70		V/mV
			●	20			15			V/mV

The ● denotes the specifications which apply over full operating temperature range.

Note 1: The input voltage can exceed the supply voltages as long as the voltage from the input to any other terminal does not exceed the maximum differential voltage, and the maximum junction temperature is not exceeded due to the excess power dissipation that occurs when the input voltage is less than the negative supply voltage.

Note 2: The maximum operating junction temperatures are: 150°C for the LM10; 100°C for the LM10B and LM10BL; and 85°C for the LM10C and LM10CL. Package derating factors will be found on the back page of this data sheet.

Note 3: These specifications apply for the following conditions unless otherwise noted:

	at 25°C	over temperature
(a)	$V^- \le V_{CM} \le V^+ - 0.85V$	$V^- \le V_{CM} \le V^+ - 1.0V$
(b)	$1.2V \le V_S \le V_{MAX}$	$1.3V \le V_S \le V_{MAX}$

$V_{REF} = 0.2V$ and $0 \le I_{REF} \le 1.0mA$ where $V_{MAX} = 40V$ for the LM10, LM10B and LM10C and $V_{MAX} = 6.5V$ for the LM10BL and LM10CL. The specifications do not include errors due to thermal gradients ($\tau_1 \approx 20ms$), die heating ($\tau_2 \approx 0.2$ sec) or package heating.

Note 4: For $T_J > 90°C$, I_{OS} may exceed 1.5nA when $V_{CM} = V^-$. When the common-mode input voltage is within 100mV of the negative supply and $T_J = 125°C$, the offset current will be less than 5nA.

Note 5: Shunt gain defines the operation in floating applications when the output is connected to the V^+ terminal and input common-mode is referred to V^- (see typical applications). The effects of larger output voltage swing with higher load resistance can be accounted for by adding the positive supply rejection error.

Note 6: Guaranteed by design.

TYPICAL PERFORMANCE CHARACTERISTICS (Op Amp)

Input Current

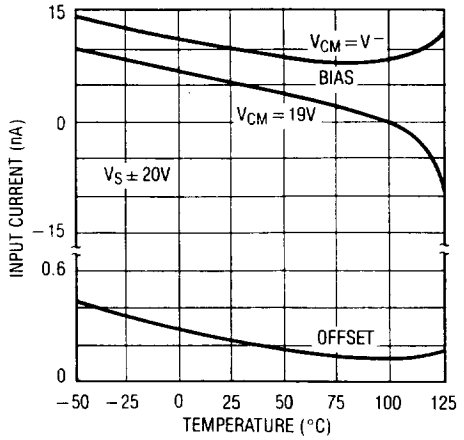

Common-Mode Limits

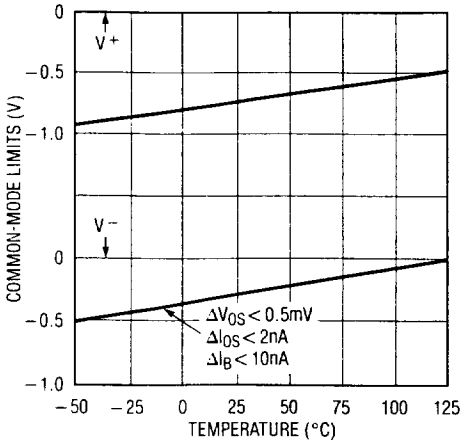

Offset Voltage Drift

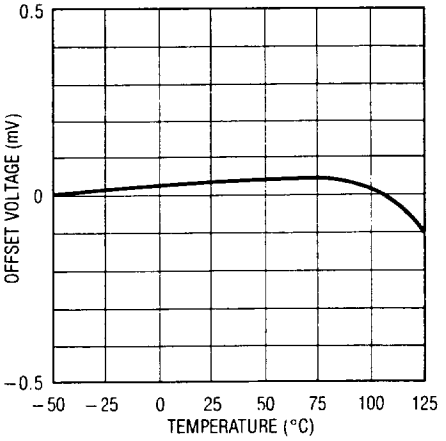

Input Noise Voltage

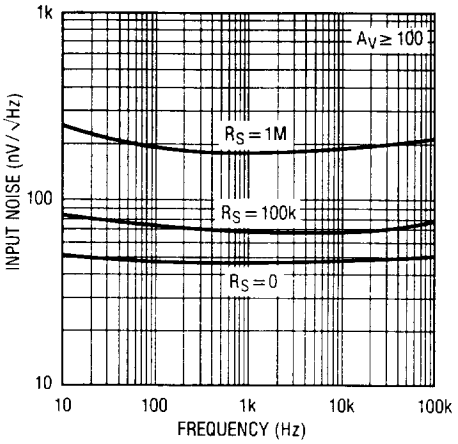

DC Voltage Gain

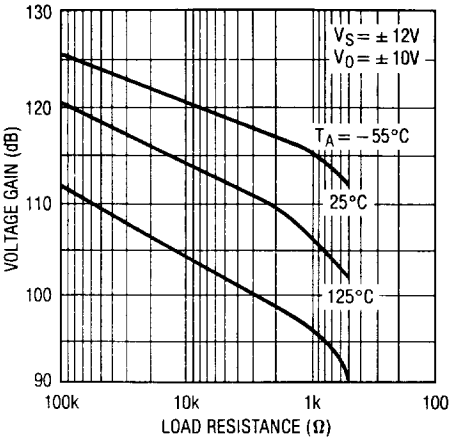

Transconductance

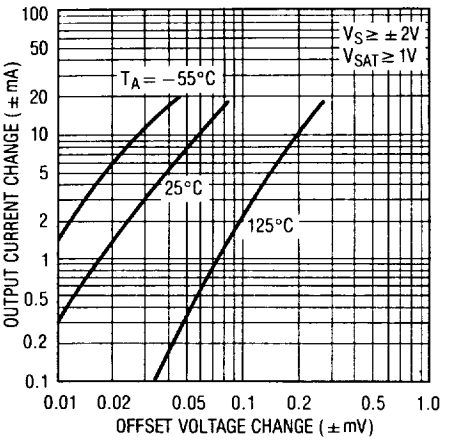

Output Saturation Characteristics

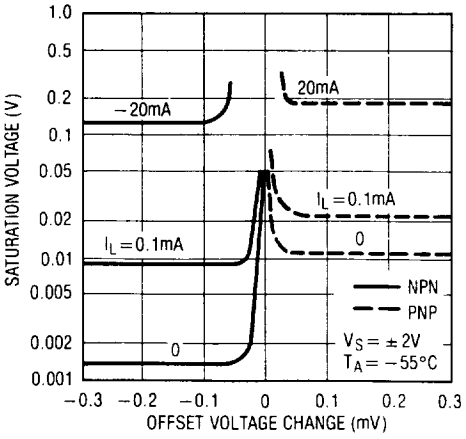

Output Saturation Characteristics

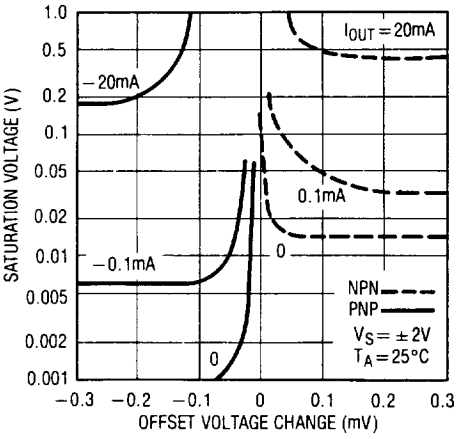

Output Saturation Characteristics

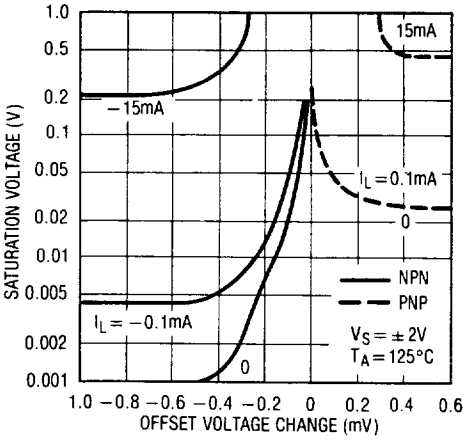

TYPICAL PERFORMANCE CHARACTERISTICS (Op Amp)

Minimum Supply Voltage

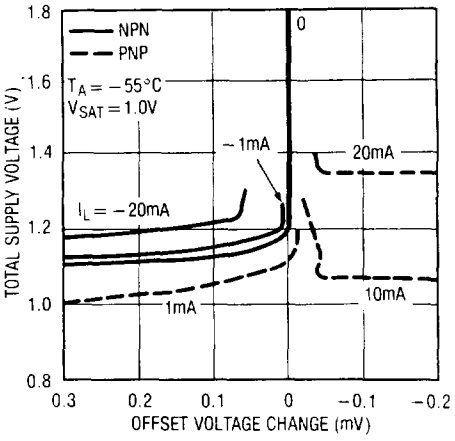

Minimum Supply Voltage

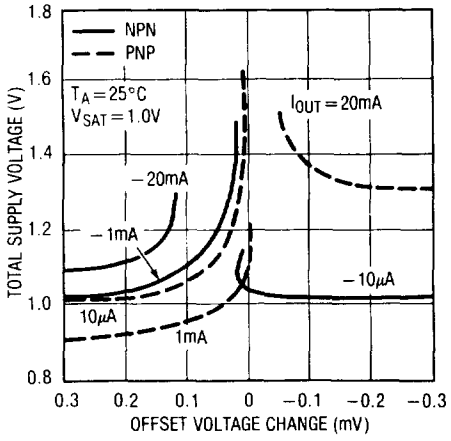

Minimum Supply Voltage

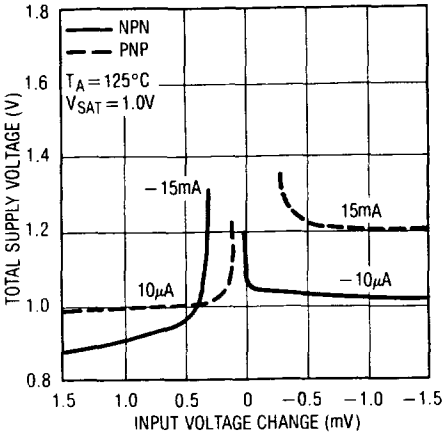

2

Frequency Response

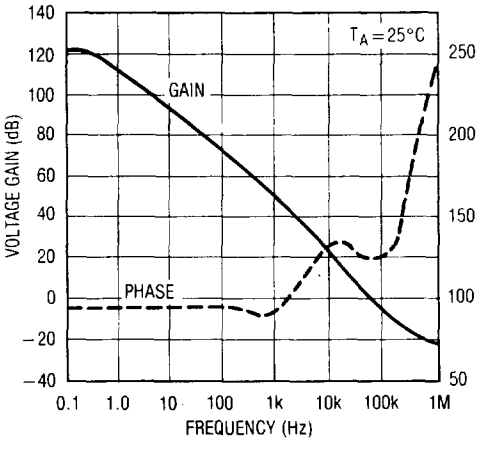

Output Impedance

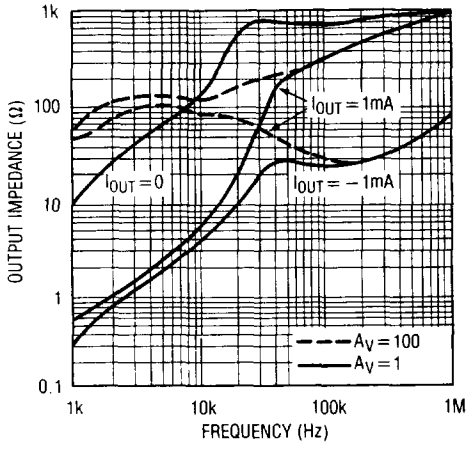

Typical Stability Range

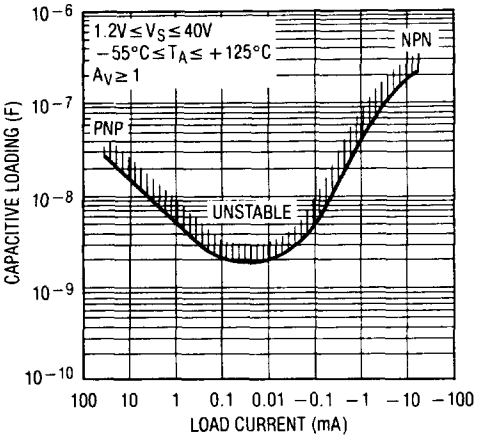

Large Signal Response

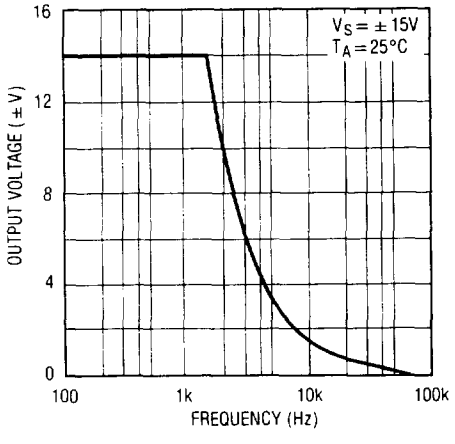

Comparator Response Time for Various Input Overdrives

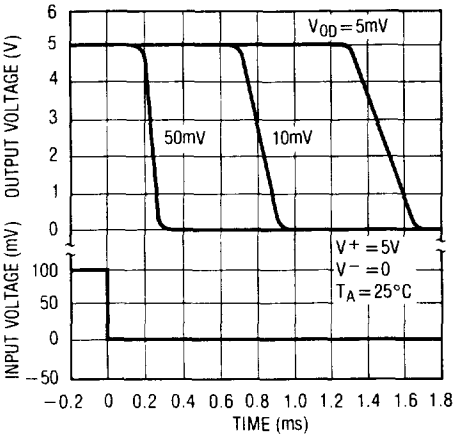

Comparator Response Time for Various Input Overdrives

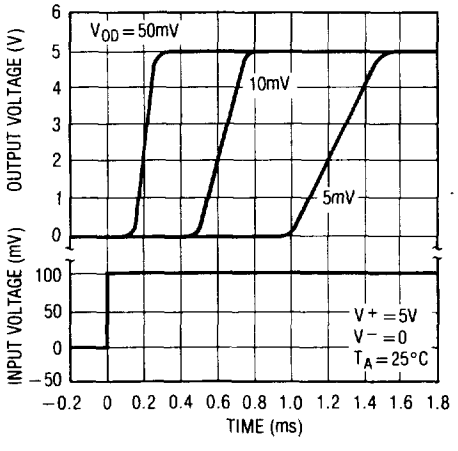

TYPICAL PERFORMANCE CHARACTERISTICS

Follower Pulse Response

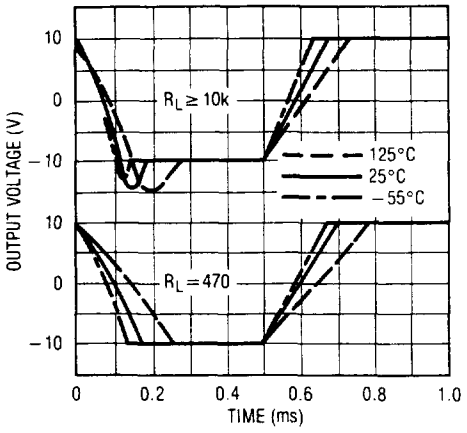

Noise Rejection

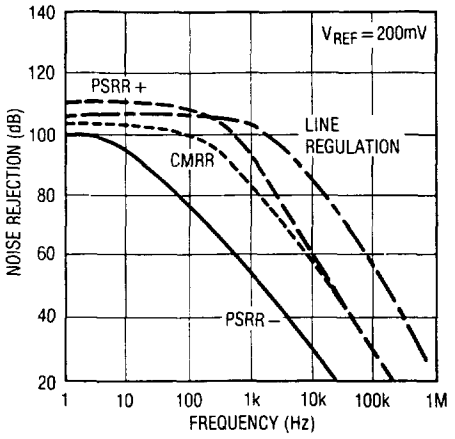

Rejection Slew Limiting

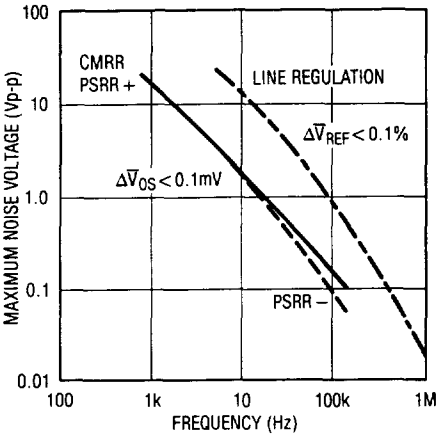

Shunt Gain

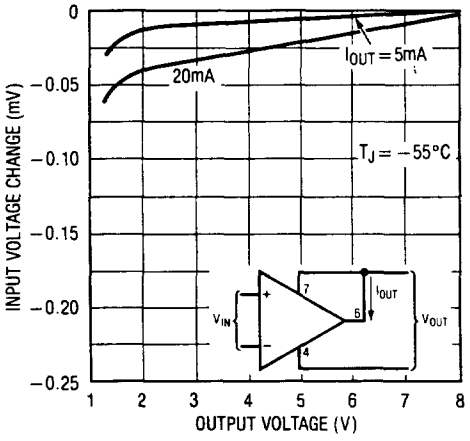

Shunt Gain

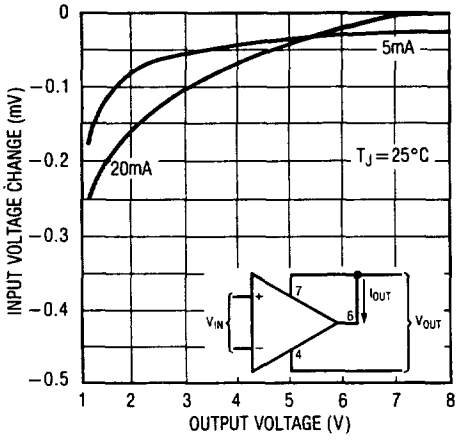

Shunt Gain

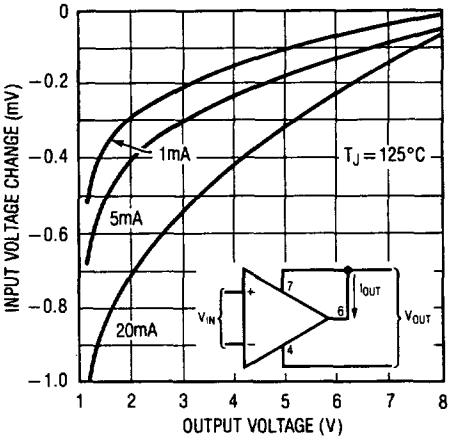

Thermal Gradient Feedback

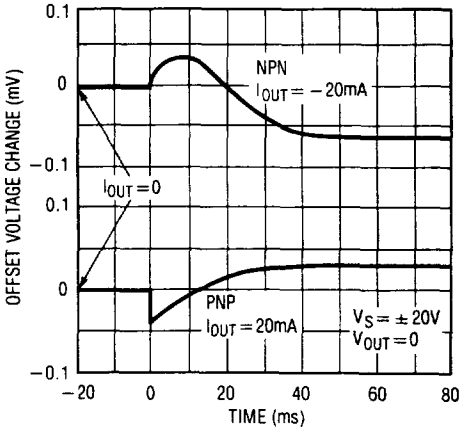

Change in Reference Op Amp Loading

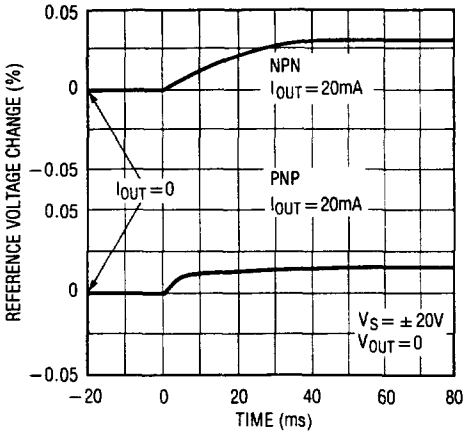

LINEAR TECHNOLOGY

TYPICAL PERFORMANCE CHARACTERISTICS (Reference)

Supply Current

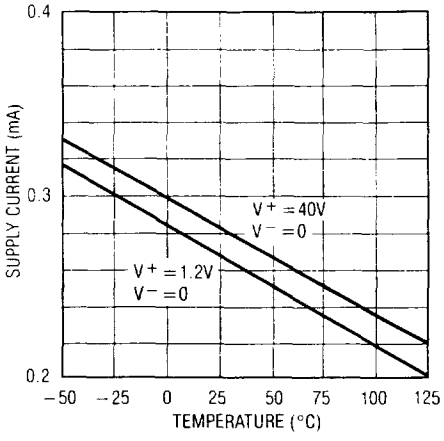

Load Regulation

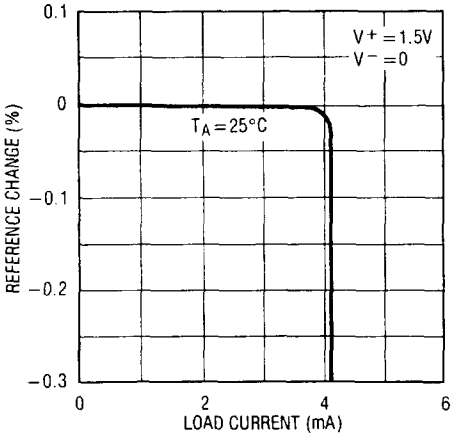

Reference Noise Voltage

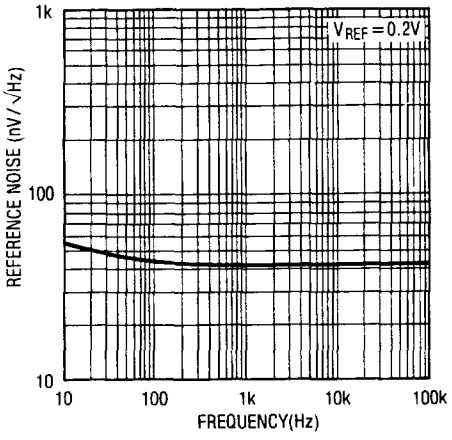

Minimum Supply Voltage

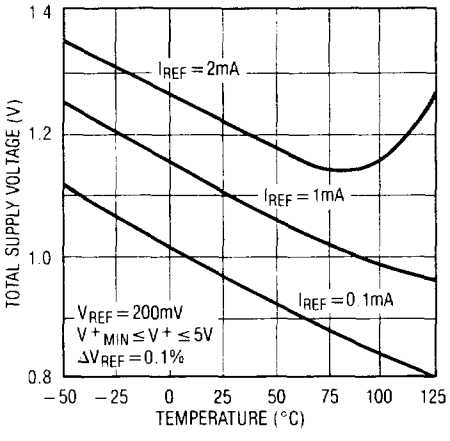

Output Saturation

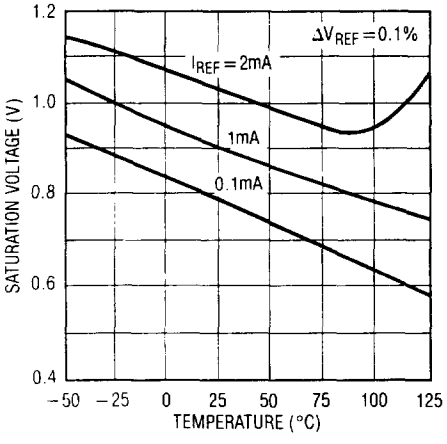

Typical Stability Range

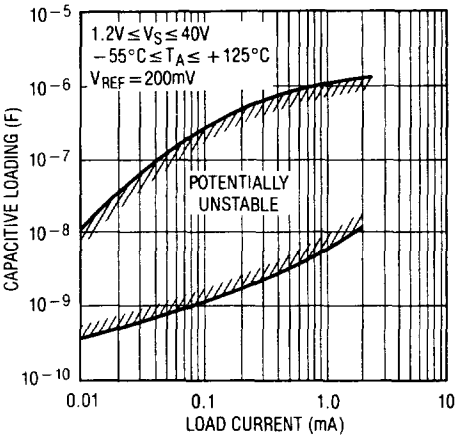

BLOCK DIAGRAM

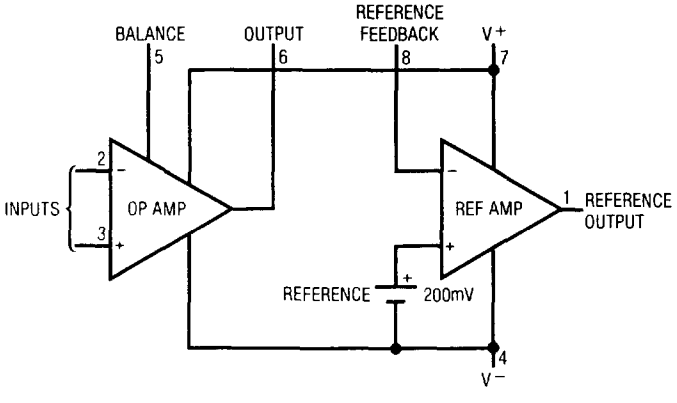

APPLICATION HINTS

With heavy amplifier loading to V^-, resistance drops in the V^- lead can adversely affect reference regulation. Lead resistance can approach 1Ω. Therefore, the common to the reference circuitry should be connected as close as possible to the package.

TYPICAL APPLICATIONS

Standard Offset Adjustment

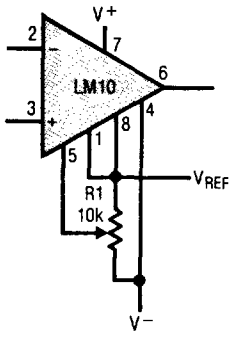

Limited Range Offset Adjustment

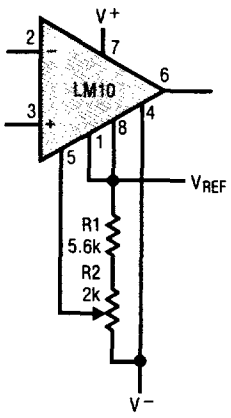

Limited Range Offset Adjustment with Boosted Reference

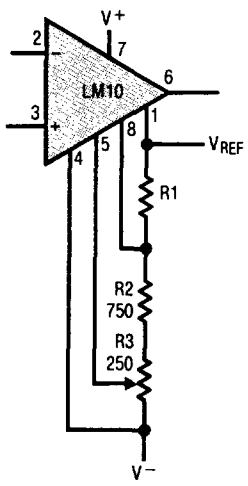

Low Voltage Regulator

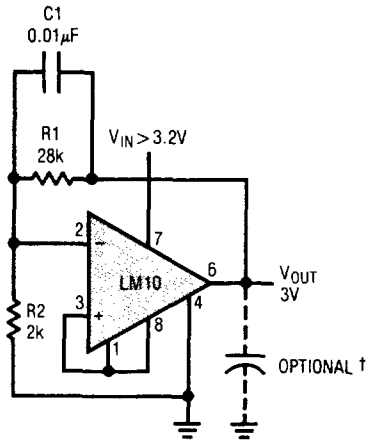

† USE ELECTROLYTIC OUTPUT CAPACITORS

Best Regulation

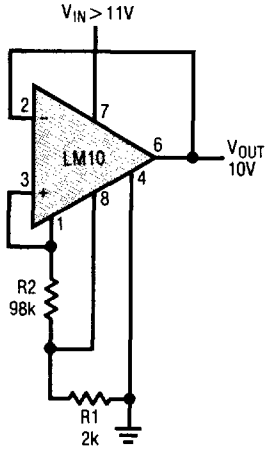

0V to 5V Regulator

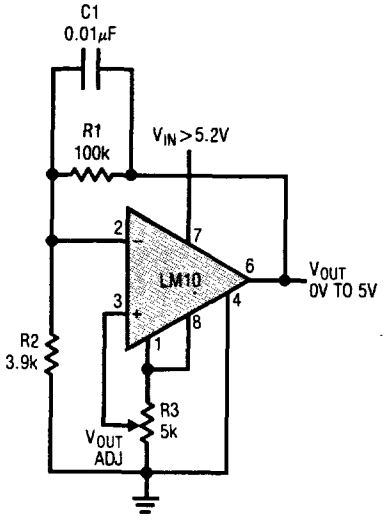

TYPICAL APPLICATIONS

Two-Terminal Current Regulator

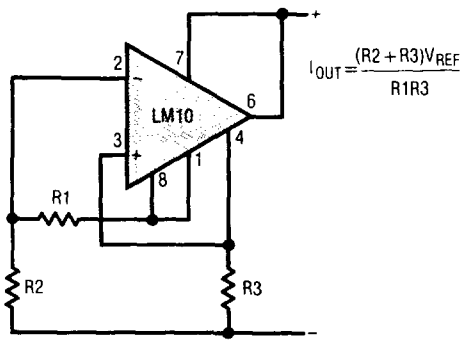

Shunt Regulator

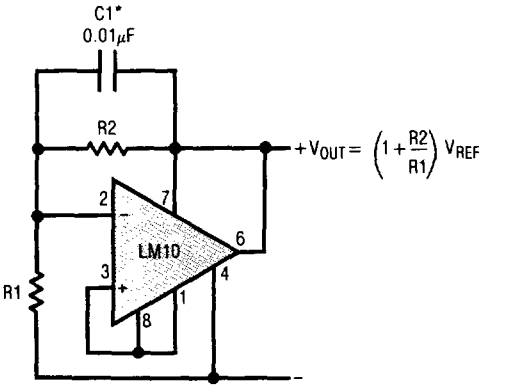

*REQUIRED FOR CAPACITIVE LOADING

Negative Regulator

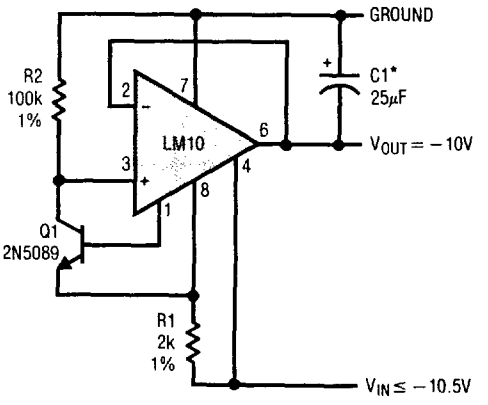

*ELECTROLYTIC

Floating Regulator

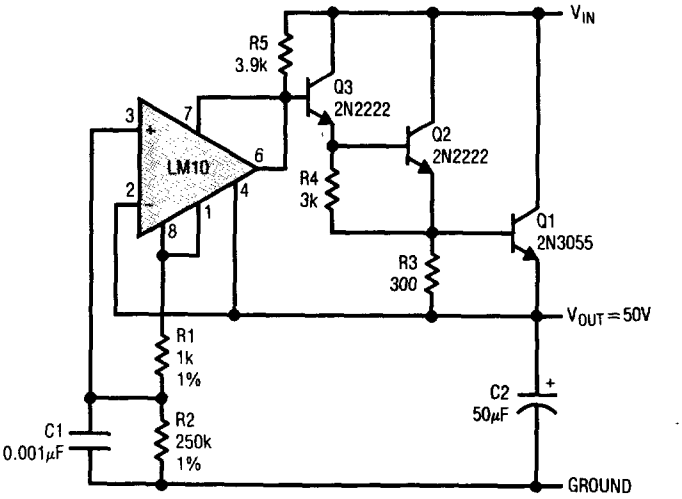

TYPICAL APPLICATIONS

High Voltage Regulator

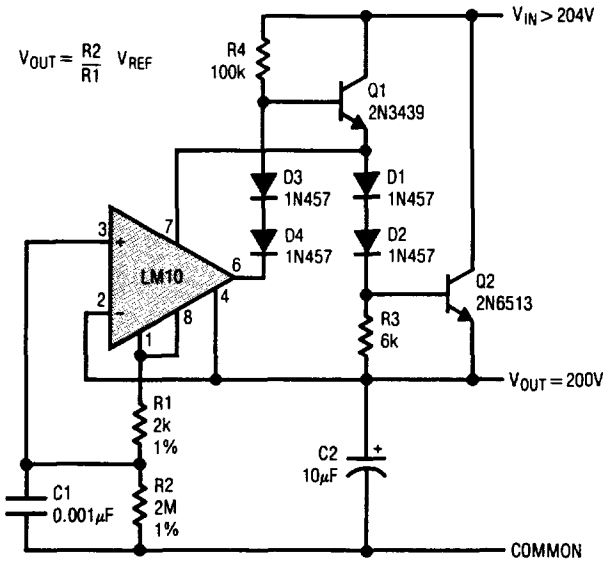

6V Battery-Level Indicator

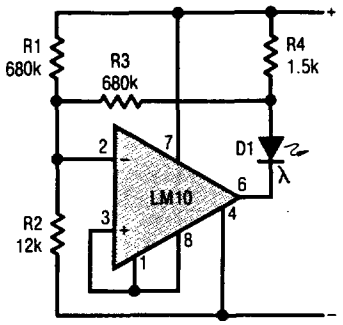

LED DIMS BELOW 7V

Light Level Sensor

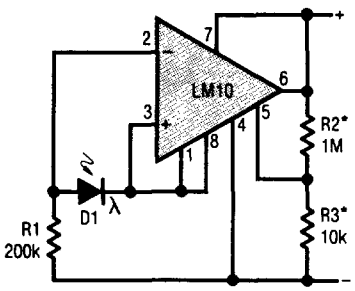

*PROVIDES HYSTERESIS

Transducer Amplifier

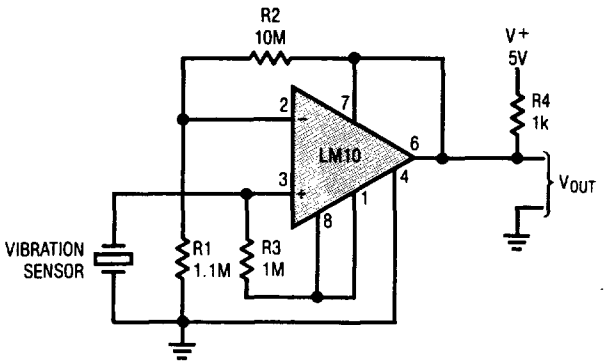

TYPICAL APPLICATIONS

Thermocouple Transmitter

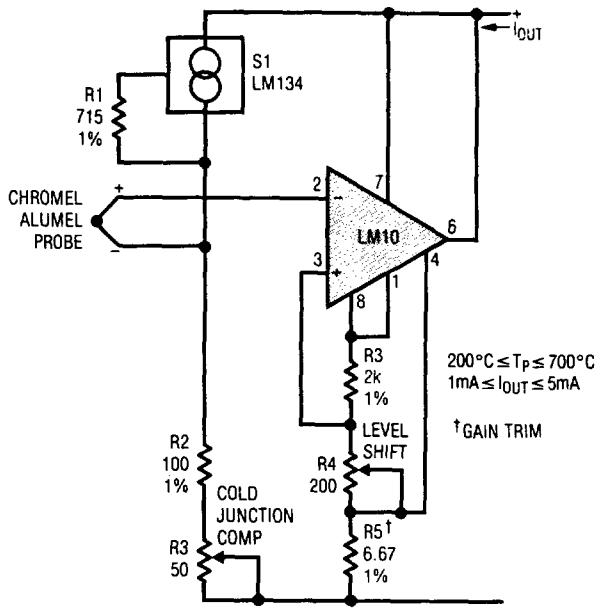

Flame Detector

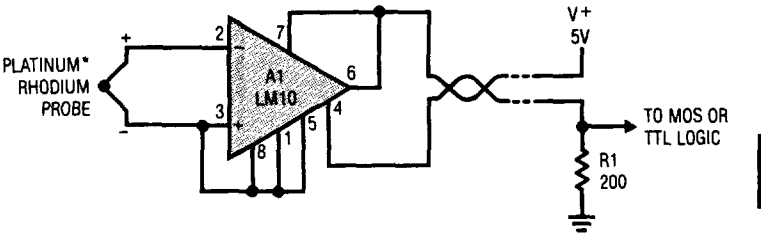

*800°C THRESHOLD IS ESTABLISHED BY CONNECTING BALANCE TO V_{REF}

Meter Amplifier

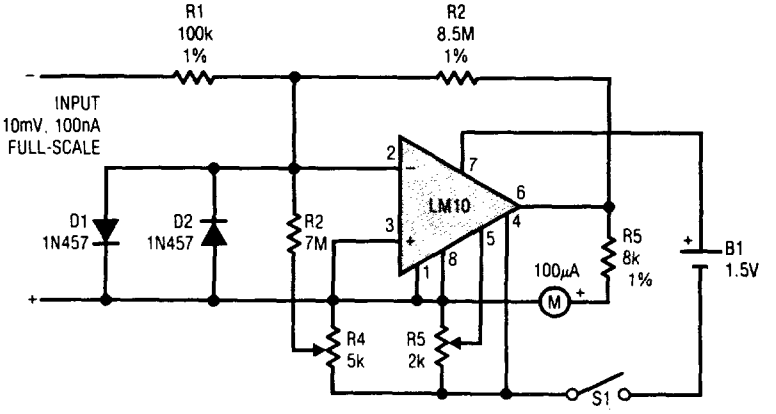

Thermometer

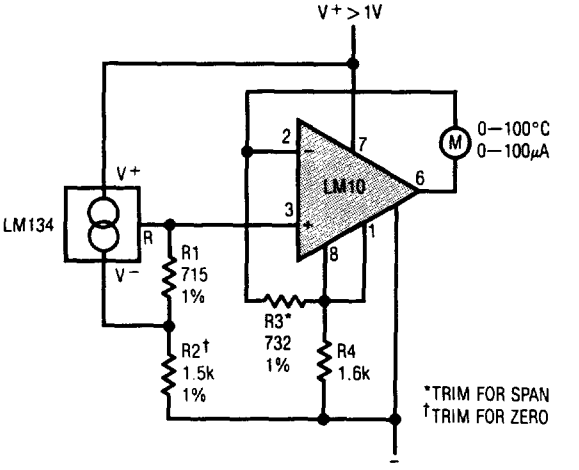

TYPICAL APPLICATIONS

Microphone Amplifier
$A_V \approx 1k$

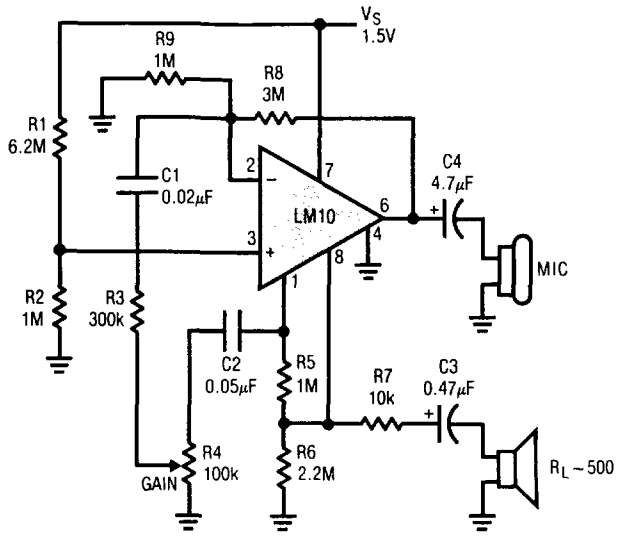

Isolated Voltage Sensor
for Switching Regulators

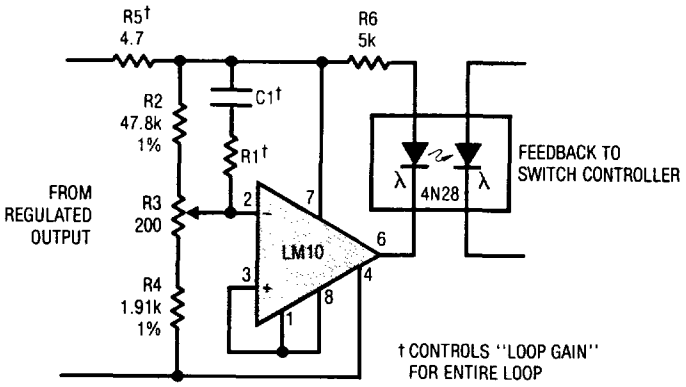

OP AMP SCHEMATIC DIAGRAM

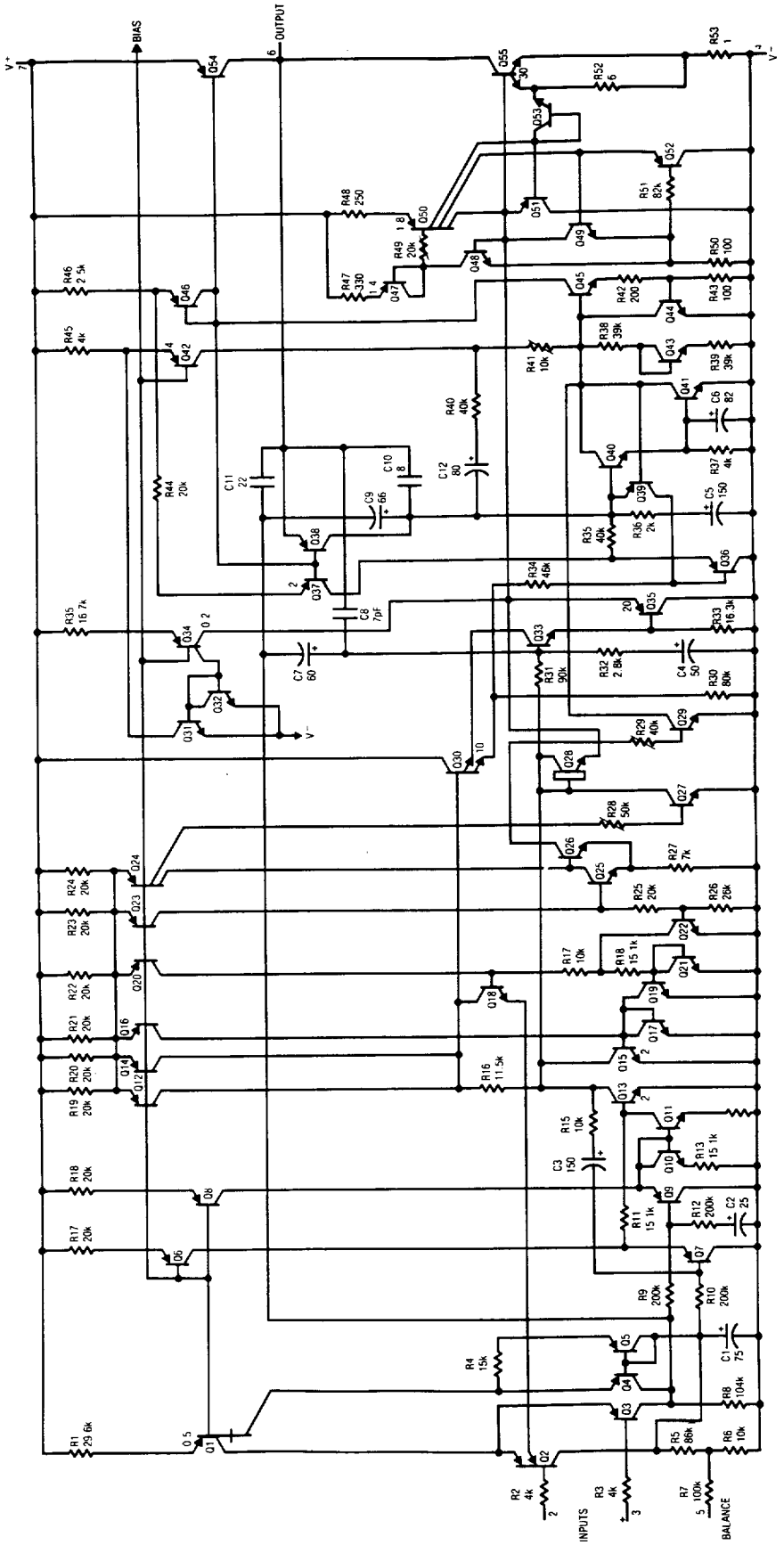

REFERENCE AND INTERNAL REGULATOR SCHEMATIC DIAGRAM

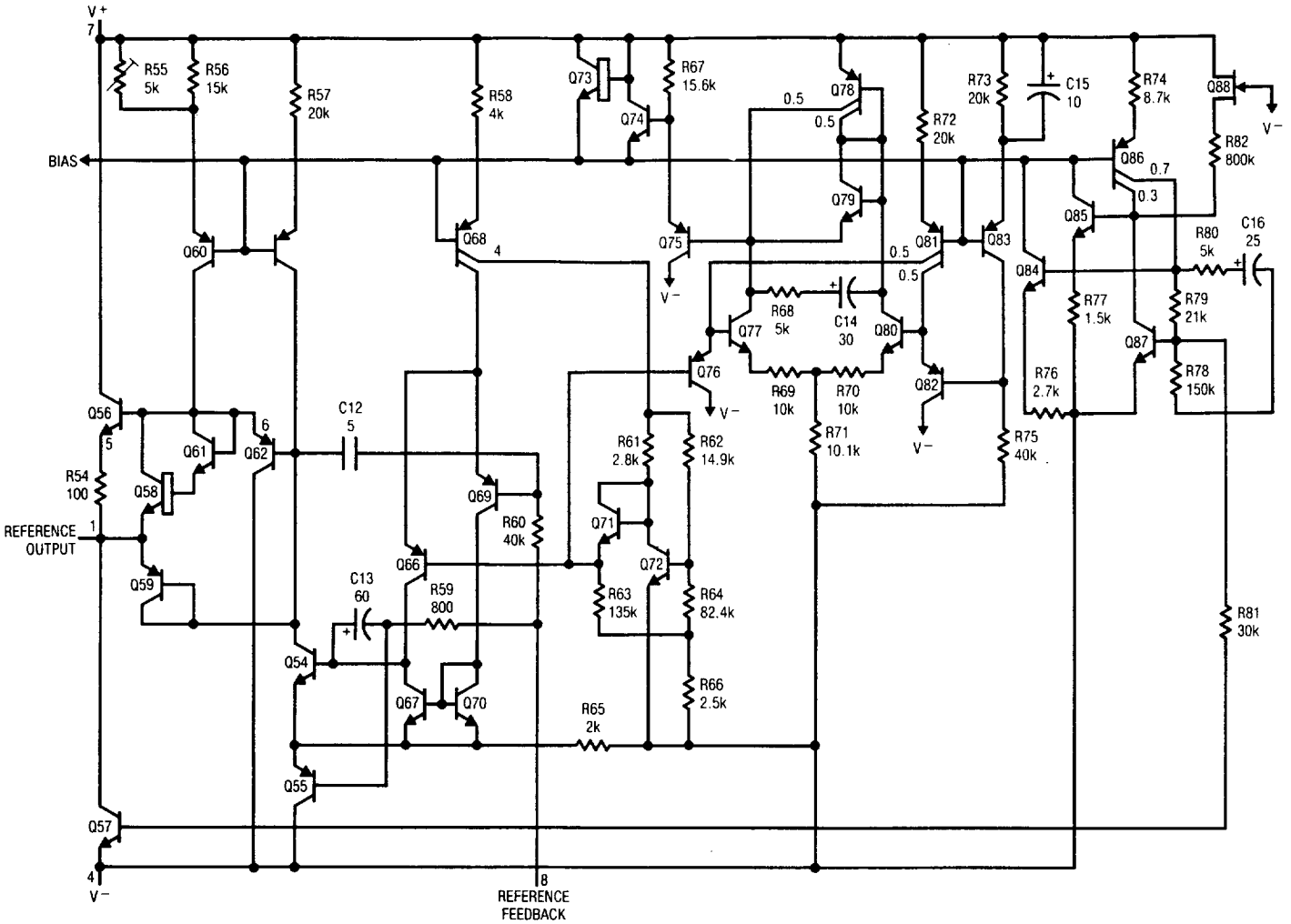

PACKAGE DESCRIPTION

H Package
Metal Can

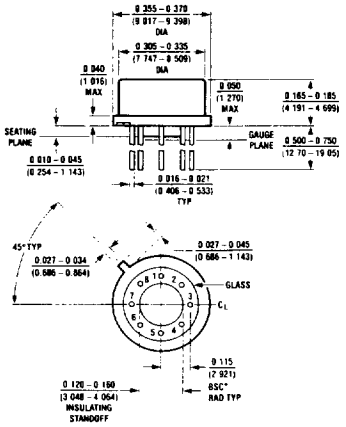

$T_j$max	θ_{ja}	θ_{jc}
150°C	150°C/W	45°C/W

J8 Package
8 Lead Hermetic Dip

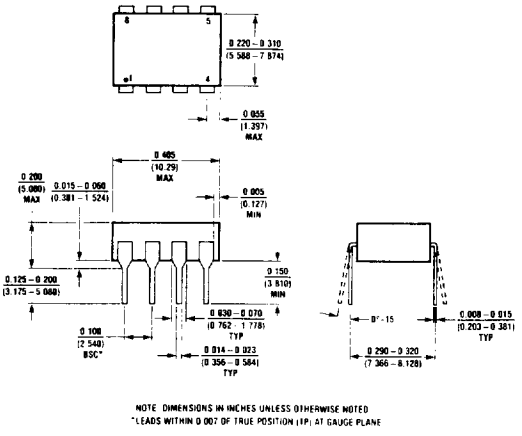

$T_j$max	θ_{ja}
150°C	100°C/W

N8 Package
8 Lead Plastic

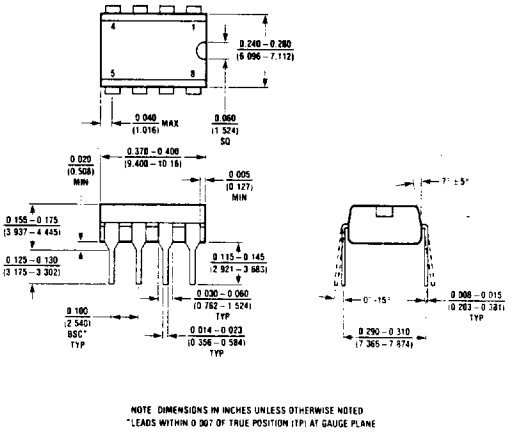

$T_j$max	θ_{ja}
100°C	130°C/W

LINEAR TECHNOLOGY

Компания «ЭлектроПласт» предлагает заключение долгосрочных отношений при поставках импортных электронных компонентов на взаимовыгодных условиях!

Наши преимущества:

- Оперативные поставки широкого спектра электронных компонентов отечественного и импортного производства напрямую от производителей и с крупнейших мировых складов;
- Поставка более 17-ти миллионов наименований электронных компонентов;
- Поставка сложных, дефицитных, либо снятых с производства позиций;
- Оперативные сроки поставки под заказ (от 5 рабочих дней);
- Экспресс доставка в любую точку России;
- Техническая поддержка проекта, помощь в подборе аналогов, поставка прототипов;
- Система менеджмента качества сертифицирована по Международному стандарту ISO 9001;
- Лицензия ФСБ на осуществление работ с использованием сведений, составляющих государственную тайну;
- Поставка специализированных компонентов (Xilinx, Altera, Analog Devices, Intersil, Interpoint, Microsemi, Aeroflex, Peregrine, Syfer, Eurofarad, Texas Instrument, Miteq, Cobham, E2V, MA-COM, Hittite, Mini-Circuits,General Dynamics и др.);

Помимо этого, одним из направлений компании «ЭлектроПласт» является направление «Источники питания». Мы предлагаем Вам помощь Конструкторского отдела:

- Подбор оптимального решения, техническое обоснование при выборе компонента;
- Подбор аналогов;
- Консультации по применению компонента;
- Поставка образцов и прототипов;
- Техническая поддержка проекта;
- Защита от снятия компонента с производства.

Как с нами связаться

Телефон: 8 (812) 309 58 32 (многоканальный)
Факс: 8 (812) 320-02-42
Электронная почта: org@eplast1.ru
Адрес: 198099, г. Санкт-Петербург, ул. Калинина, дом 2, корпус 4, литера А.