INNOVATION SERIES

Linear LED Light Modules

Overview

Heatron's Innovation Series LED Modules provide luminaire manufacturers with the key components needed to move LED lighting projects from concept to production. The LED modules were built for design engineers looking for an easy way to prototype new fixture designs. An off-the-shelf platform, these modules move seamlessly from prototype to final design. Innovation Modules are centered on Cree XPG and XTE LEDs. Custom configurations are available for OEM's who prefer other LED packages, flux bins, color temperatures or CRI.

Linear Innovation Series LED Modules are available in three sizes with two, three, or six LED arrays.

Also see our Round Innovation Series LED Modules, available in three versions with three or seven LED arrays.

Innovation Series modules come with easy-to-use connectors, enabling quick prototyping of various light engines.

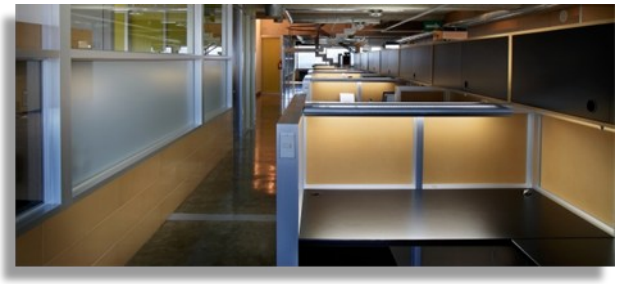

Transforming Your Vision
into Higher Performance Solutions

3000 Wilson Avenue • Leavenworth, KS 66048-4637 • 1.877.553.9070 • 1.913.651.4420 • www.heatron.com • heatron1@heatron.com

Linear LED Light Modules

Key Features

- Luminous efficacy of up to 78 lm/W
- Available in 3000 K
- CRI 80
- Peel and stick thermal interface for easy integration into OEM light fixtures
- Environmentally green: Mercury and UV Free
- 5 year warranty

Fixture Types

- Sconce
- Linear
- Accent
- Step
- Cove
- Under cabinet task

Optical Characteristics Tj = 85°C				
Part Number	Lumen[1] Values If @ 700 mA	Lumen[1] Values If @1.5A	Color Temperature (Kelvin)	CRI Minimum
JDHT-LMC02-XPG-WW-094	300	530	3000	80
JDHT-LMC03-XPG-WW-094	450	810	3000	80
JDHT-LMC06-XPG-WW-094	900	1600	3000	80
JDHT-LMC02-XTE-WW-094	320	550	3000	80
JDHT-LMC03-XTE-WW-094	500	860	3000	80
JDHT-LMC06-XTE-WW-094	1000	1700	3000	80

[1]Values are nominal. Flux values measured without optics.

Electrical Characteristics Tj = 85°C						
Part Number	Vf		Forward Current		Input Power	
	Nominal	Max	Nominal	Max	Nominal	Max
JDHT-LMC02-XPG-WW-094	5.8 V	6.2 V	700 mA	1.5 A	4.0 W	9.2 W
JDHT-LMC03-XPG-WW-094	8.65 V	9.24 V	700 mA	1.5 A	6.0 W	13.9 W
JDHT-LMC06-XPG-WW-094	17.3 V	18.5 V	700 mA	1.5 A	12.1 W	27.7 W
JDHT-LMC02-XTE-WW-094	6.1 V	6.8 V	700 mA	1.5 A	4.3 W	10.1 W
JDHT-LMC03-XTE-WW-094	9.14 V	10.12 V	700 mA	1.5 A	6.4 W	15.2 W
JDHT-LMC06-XTE-WW-094	18.3 V	20.3 V	700 mA	1.5 A	12.8 W	30.4 W

Ordering Information

Example: JDHT-LMC02-XPG-WW-094

Internal	Series	LED Quantity	LED	Color Temperature	Min. Flux Bin	Optics C_B
JDHT	LMC	02 03 06	XTE XPG	WW = 3000	094	Blank = no optics N = Narrow 10° M = Medium 30° W = Wide 40°

Contact Heatron LED Integration for alternative Innovations Series product configurations in LEDs, flux, CCT and CRI

Linear LED Light Modules

Linear 2 LED Array	Linear 3 LED Array	Linear 6 LED Array

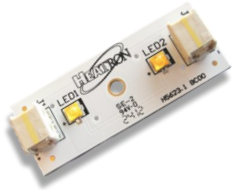

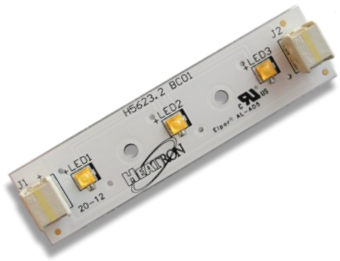

Dimensions

All Linear LED Array Dimensions: Width & Height

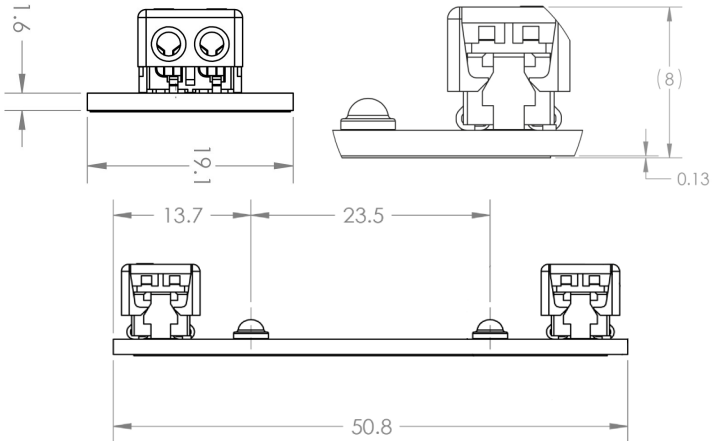

Linear 2 LED Array Dimensions: Length & Positioning

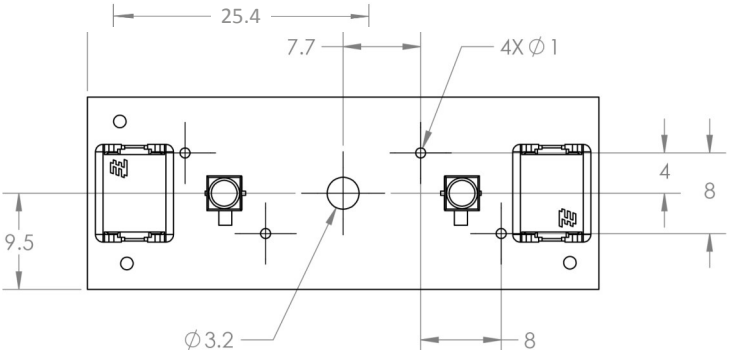

Dimensions

Linear 3 LED Array Dimensions: Length & Positioning

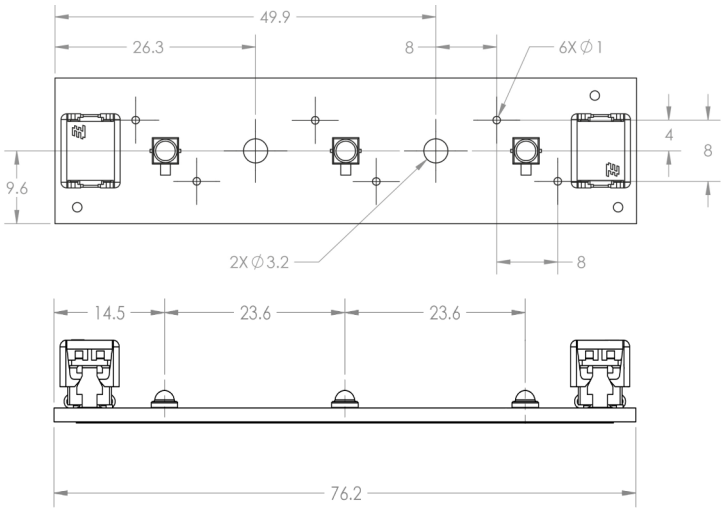

Linear 6 LED Array Dimensions: Length & Positioning

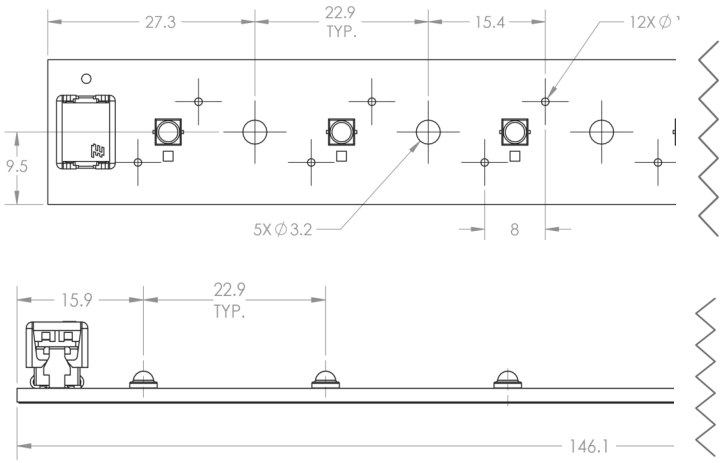

All dimensions are in millimeters.

Innovation Series LED Modules are high output arrays; use with constant current driver and heat sink capable of dissipating 10 Watts for Linear 2 LED Arrays, 15 Watts for Linear 3 LED Array and 30 Watts for Linear 6 LED Array. Contact Heatron for list of compatible LED drivers.

About Heatron LED Integration

Heatron LED Integration helps OEMs reduce costs, speed time to market and ensure superior quality and performance. Heatron LED Integration leverages the engineering disciplines of optical, electrical and mechanical design, with expertise in thermal management.

Offering various levels of integration ranging from design and manufacture of component level LED light engines to turnkey lighting solutions, Heatron designs for a broad range of uses, including indoor, outdoor, commercial, industrial, healthcare and transportation lighting applications.

Heatron, Inc. – *Transforming Your Vision into Higher Performance Solutions.* For more information about Heatron LED Integration, its products, services and manufacturing, visit www.heatron.com

3000 Wilson Avenue
Leavenworth, KS 66048-4637 USA
877.553.9070
P: 1.913.651.4420 • F: 1.913.651.5352
www.heatron.com • heatron1@heatron.com
ISO 9001 • Registered by Underwriters Laboratories, Inc.

HEATRON
LED INTEGRATION

Компания «ЭлектроПласт» предлагает заключение долгосрочных отношений при поставках импортных электронных компонентов на взаимовыгодных условиях!

Наши преимущества:

- Оперативные поставки широкого спектра электронных компонентов отечественного и импортного производства напрямую от производителей и с крупнейших мировых складов;
- Поставка более 17-ти миллионов наименований электронных компонентов;
- Поставка сложных, дефицитных, либо снятых с производства позиций;
- Оперативные сроки поставки под заказ (от 5 рабочих дней);
- Экспресс доставка в любую точку России;
- Техническая поддержка проекта, помощь в подборе аналогов, поставка прототипов;
- Система менеджмента качества сертифицирована по Международному стандарту ISO 9001;
- Лицензия ФСБ на осуществление работ с использованием сведений, составляющих государственную тайну;
- Поставка специализированных компонентов (Xilinx, Altera, Analog Devices, Intersil, Interpoint, Microsemi, Aeroflex, Peregrine, Syfer, Eurofarad, Texas Instrument, Miteq, Cobham, E2V, MA-COM, Hittite, Mini-Circuits,General Dynamics и др.);

Помимо этого, одним из направлений компании «ЭлектроПласт» является направление «Источники питания». Мы предлагаем Вам помощь Конструкторского отдела:

- Подбор оптимального решения, техническое обоснование при выборе компонента;
- Подбор аналогов;
- Консультации по применению компонента;
- Поставка образцов и прототипов;
- Техническая поддержка проекта;
- Защита от снятия компонента с производства.

Как с нами связаться

Телефон: 8 (812) 309 58 32 (многоканальный)
Факс: 8 (812) 320-02-42
Электронная почта: org@eplast1.ru
Адрес: 198099, г. Санкт-Петербург, ул. Калинина, дом 2, корпус 4, литера А.