NOTES: SEE SHEET 2.

If this document is printed it becomes uncontrolled. Check for the latest revision

| REVISIONS | | | |
|---|---|---|---|
| LTR | DESCRIPTION | DATE | APPROVED |
| H | REVISED PER DCR# C061468 | Jan/11/07 | M.HIGGY |
| J | PER ECO-09-004669 | Feb/24/09 | M.HIGGY |
| K | PER ECO-11-008915 | Apr/28/2011 | M.HIGGY |

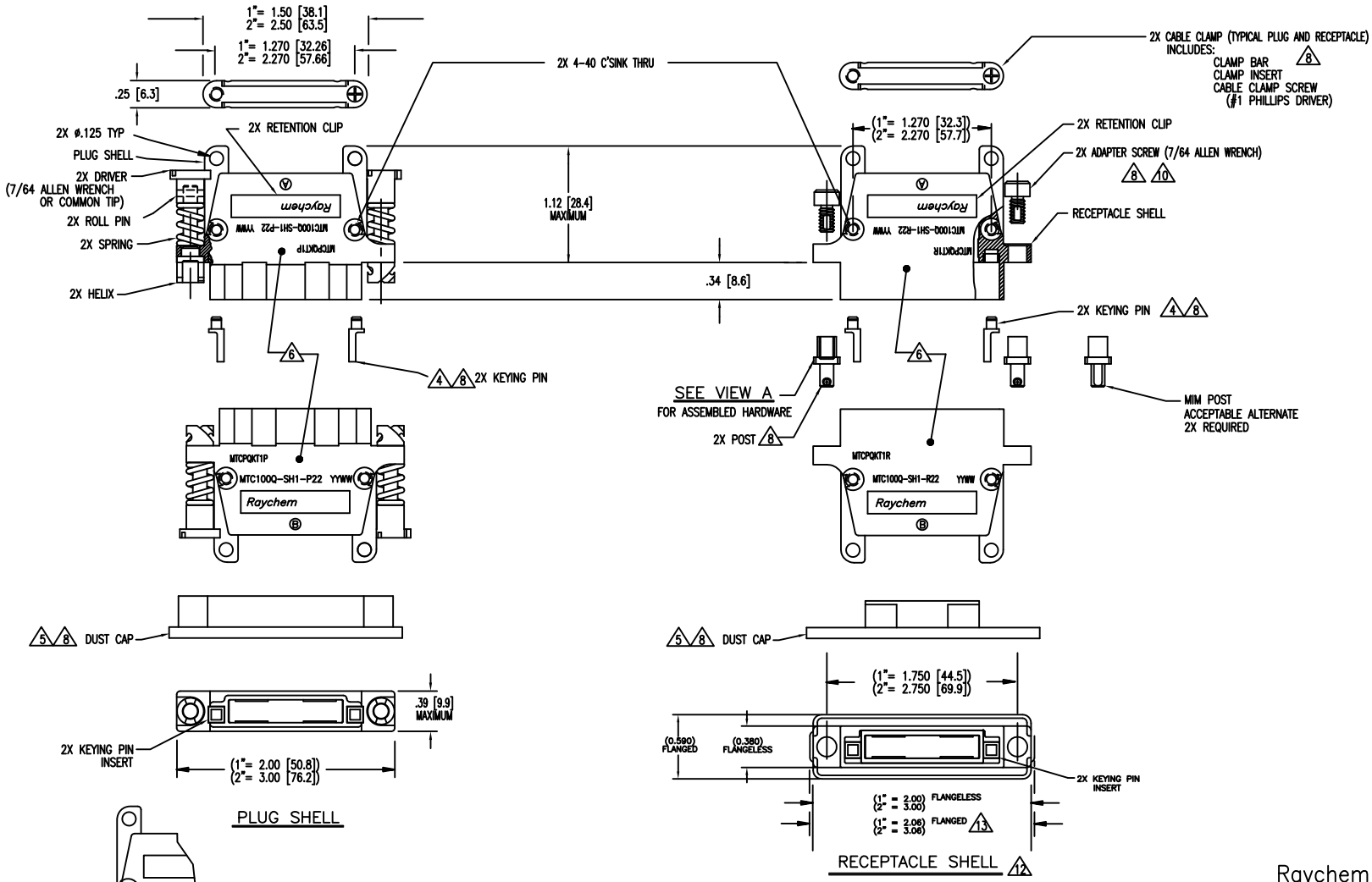


© 2006-2011 Tyco Electronics. All rights reserved

Raychem MTC
CUSTOMER DRAWING

THIS DRAWING AND THE INFORMATION SET FORTH HEREON ARE THE PROPERTY OF TYCO ELECTRONICS AND ARE TO BE HELD IN TRUST AND CONFIDENCE. PUBLICATION, DUPLICATION, DISCLOSURE OR USE FOR ANY PURPOSE NOT EXPRESSLY AUTHORIZED IN WRITING BY TYCO ELECTRONICS IS PROHIBITED.

UNLESS OTHERWISE SPECIFIED DIMENSIONS ARE IN INCHES. METRIC DIMENSIONS ARE IN BRACKETS.

DECIMALS
.XXX ±.005 { .13 mm
.XX ±.02 { .5 mm
ANGLES
.X ±
WEIGHT: 9

| | | |
|---|---|---|
| DRAWN | T.SEATON | 96JUN28 |
| CHECKED | | |
| APPROVED | P.DUTTON | 96JUL03 |
| APPROVED | | |
| CAD NAME | MTC100Q-SHX-X2X-XXX | |
| THIRD ANGLE PROJECTION | | |

TE Connectivity

TITLE
SHELL, PLUG AND RECEPTACLE
MTC100Q SERIES

| SIZE | CAGE CODE: | DWG. NO. | REV |
|---|---|---|---|
| C | 06090 | MTC100Q-SHX-X2X-XXX | K |

SCALE: NONE SHEET 1 OF 3

SHEET 1
DWG NO. MTC100Q-SHX-X2X-XXX

NOTES:

1. SHELL PART NUMBER VARIABLES: (NOT ALL POSSIBLE CONFIGURATIONS SHOWN ON THIS DRAWING ARE AVAILABLE AS STANDARD PRODUCTS. PLEASE CHECK WITH RAYCHEM TO CONFIRM AVAILABILITY.)

MTC100Q-SHX-X2X-XXX

- XXX: MODIFICATIONS (see table I ) (THIS SPACE BLANK IF NO MODIFICATION IS APPLICABLE)
- X: 2= WITH CABLE CLAMP AND EARS ON SHELL; 3= W/O CABLE CLAMP AND EARS ON SHELL
- 2: 2= ELECTROLESS NICKEL (BLACK MARKING)
- X: P= PLUG; F= FLANGED; R= FLANGELESS RECEPTACLE
- X: 1= 1 INCH; 2= 2 INCH
- S= SHELL / GROUNDING BUSBAR

2. MATERIAL:

| | |
|---|---|
| A) SHELL | ALUMINUM ALLOY PER ASTM B85 |
| B) RETENTION CLIP | COPPER ALLOY 172 PER ASTM B194 |
| C) CAP SCREW | STAINLESS STEEL PER SAE-AMS-QQ-S-763, 300 SERIES |
| D) POST * | STAINLESS STEEL , PER AISI 17-4 PH |
| E) ROLL PIN | STAINLESS STEEL PER SAE-AMS 5673, 400 SERIES |
| F) KEYING PIN | HIGH GRADE POLYARYLENE THERMOPLASTIC, MOLDED |
| G) KEY PINS INSERT | HIGH GRADE POLYARYLENE THERMOPLASTIC, MOLDED |
| H) CLAMP BAR | STAINLESS STEEL PER SAE-AMS-QQ-S-763, 300 SERIES |
| J) CLAMP INSERT | SILICONE ELASTOMER PER MIL-DTL-25988B |
| K) DRIVER * | STAINLESS STEEL , PER AISI 17-4 PH |
| L) SPRING | STAINLESS STEEL PER AMS 5673, 17-7 PH |
| L) HELIX * | STAINLESS STEEL , PER AISI 17-4 PH |

* ACCEPTABLE ALTERNATE, STAINLESS STEEL, PER MPIF STD 35, MIM-17-4 PH

3. FINISH:

| | APPLIES TO NICKEL PLATED CONNECTORS |
|---|---|
| A) SHELL | NICKEL PLATED PER SAE-AMS-C-26074 CLASS 3, GRADE B |
| B) RETENTION CLIP | NICKEL PLATED PER SAE-AMS-C-26074 CLASS 2, .00002 MINIMUM |
| C) POST CAP SCREW | PASSIVATED PER SAE-AMS-QQ-P-35 |
| D) POST | NICKEL TEFLON PLATED PER TECHMETALS 117C |
| E) HELIX | NICKEL TEFLON PLATED PER TECHMETALS 117C |
| F) ROLL PIN | PASSIVATED PER SAE-AMS-QQ-P-35 |
| G) DRIVER | PASSIVATED PER SAE-AMS-QQ-P-35 |

4. KEYING PIN IS SUPPLIED UNINSTALLED, USER TO PRESS INTO PROPER KEYING POSITION. SEE TABLE 5 FOR STANDARD KEYING PIN POSITIONS. FOR ADDITIONAL KEYING OPTIONS REFER TO D-659-0080.

5. STANDARD (RED) DUST CAP ARE SUPPLIED WITH EACH PLUG AND RECEPTACLE. SEE TABLE VI FOR MORE INFORMATION.

6. APPROPRIATE PART NUMBERS AND DATE CODES ARE STAMPED APPROXIMATELY AS SHOWN ON "B" SIDE. ALL "A" SIDE MARKINGS ARE OPTIONAL.

7. THESE PARTS MEET THE REQUIREMENTS OF TE SPECIFICATION C-6114.

8. THESE ITEMS ARE SUPPLIED UNASSEMBLED.

9. SEE TABLE II SHEET 3, WEIGHTS ARE WITHOUT DUST CAP.

10. RECEPTACLE POST SCREWS (CAP SCREWS) ARE TO BE TORQUED TO 15±1 INCH-LBS (1.0±0.07 N-M)

11. PLUG AND RECEPTACLE SHELLS ARE DESIGNED TO ACCEPT EITHER PIN OR SOCKET INSERTS. OR MIXED IN THE TWO INCHES STYLE.

12. THIS RECEPTACLE IS RECOMMENDED FOR REAR PANEL MOUNTING APPLICATION. REMOVING AS MANY PANEL WASHERS AS REQUIRED TO ACCOMMODATE THE THICKNESS OF THE PANEL BEING USED. SEE SHEET 3, TABLE 4, FIGURE 1. USE ONLY SCREWS SUPPLIED WITH CONNECTOR. POST TO BE FLUSH WITHIN TOLERANCE AS SHOWN SEE VIEW 'A" PAGE # 1.

13. WHEN MOUNTING FLANGELESS CONNECTORS ADJACENT TO ONE ANOTHER AND USING THE .400 MINIMUM CENTERLINE LOCATION, THERE WILL BE NO WEB BETWEEN PANEL CUT-OUTS. SEE SHEET 3, TABLE 3, FOR DETAILS.

14. THE HARDWARE FOR THIS CONNECTOR IS DESIGNED TO BE USED ON 0.063 INCH PANEL THICKNESS. OTHERWISE 2 THIN WASHERS (PANEL WASHERS) ARE REQUIRED FOR EACH POST. USE PART D-659-0042.

TABLE I (MODIFICATIONS)

| MODIFICATION DASH NUMBER | DESCRIPTION |
|---|---|
| -022 | SAME AS STANDARD ASSEMBLY, EXCEPT CONTACTS AND SEALING PLUGS ARE INCLUDED. |
| -023 | SAME AS STANDARD ASSEMBLY, EXCEPT CONTACTS SEALING PLUGS AND INSERTION / EXTRACTION TOOL ARE INCLUDED. |
| | |
| | |
| | |

If this document is printed it becomes uncontrolled. Check for the latest revision

© 2006-2011 Tyco Electronics. All rights reserved

Raychem MTC
CUSTOMER DRAWING

| DWG. NO. | REV |
|---|---|
| MTC100Q-SHX-X2X-XXX | K |
| CAD FILE: MTC100Q-SHX-X2X-XXX | SHEET 2 OF 3 |

THE FOLLOWING TABLE CONSISTS OF WEIGHTS FOR THESE SPECIFIC PART NUMBERS.

| TABLE II 9 | |
|---|---|
| PART NUMBER | WEIGHT MAXIMUM GRAMS |
| MTC100Q–SH1–F22 | 29.9 |
| MTC100Q–SH1–P22 | 29.5 |
| MTC100Q–SH1–R22 | 26.2 |
| MTC100Q–SH2–F22 | 40.5 |
| MTC100Q–SH2–P22 | 39.7 |
| MTC100Q–SH2–R22 | 36.4 |
| MTC100Q–SH1–F23 | 19.0 |
| MTC100Q–SH1–P23 | 21.9 |
| MTC100Q–SH1–R23 | 18.6 |
| MTC100Q–SH2–F23 | 28.9 |
| MTC100Q–SH2–P23 | 28.1 |
| MTC100Q–SH2–R23 | 24.7 |

| TABLE IV 12 | |
|---|---|
| PANEL THICKNESS | NUMBER OF PANEL WASHERS FOR EACH FASTENER |
| 0 | 2 |
| 0.031/0.036 [0.8]/[0.9] | 1 |
| 0.062/0.067 [1.5]/[1.7] | 0 |

14

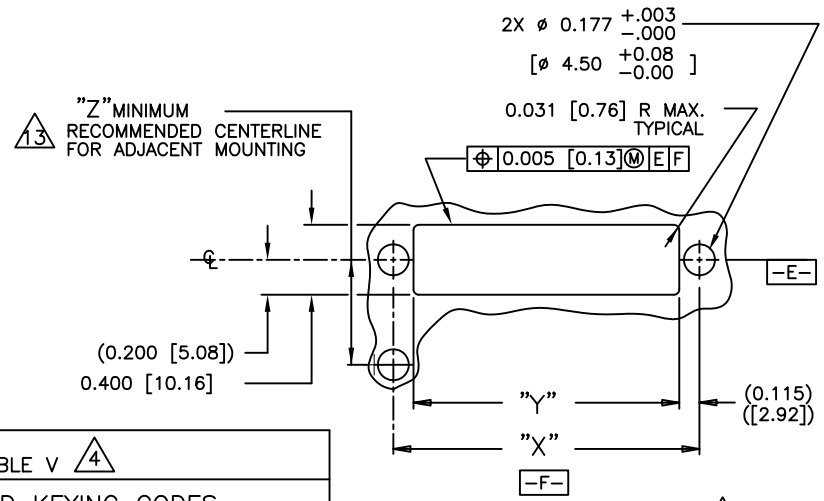


RECOMMENDED PANEL CUT–OUT 12

FIGURE 1

| TABLE III 13 | | | | |
|---|---|---|---|---|
| CONNECTOR SIZE | TYPE: | "X" | "Y" | "Z" (MIN) |
| 1 INCH | FLANGELESS | 1.750 [44.5] | 1.520 [38.6] | 0.400 [10.16] |
| | FLANGED | 1.750 [44.5] | 1.520 [38.6] | 0.600 [15.24] |
| 2 INCH | FLANGELESS | 2.750 [69.9] | 2.520 [64.0] | 0.400 [10.16] |
| | FLANGED | 2.750 [69.9] | 2.520 [64.0] | 0.600 [15.24] |

TABLE V 4

SUGGESTED KEYING CODES

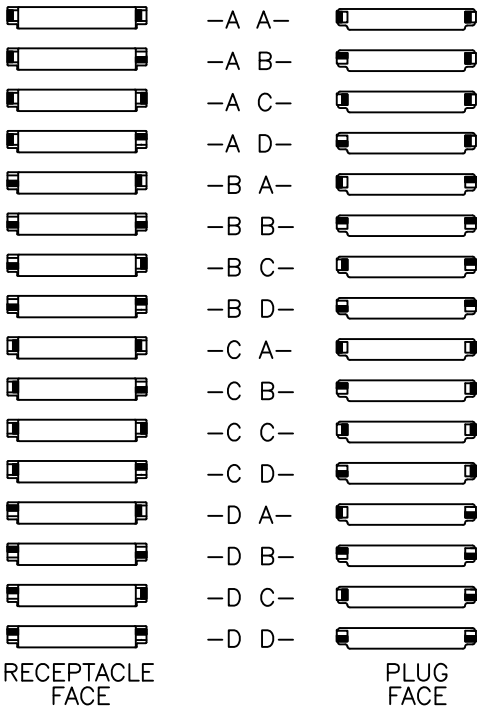


WHEN USING STANDARD RECTANGULAR KEYING PINS

| TABLE VI 5 | | | | | |
|---|---|---|---|---|---|
| RECOMMENDED DUST CAP | | | | | |
| ITEM | PART NUMBER | USED WITH SHELL | | DUCT CAP MATERIAL | |
| | | SIZE | TYPE | POLYETHYLENE RED | ELECTROSTATIC PINK |
| 1 | D–659–0060 | 1" | PLUG | X | |
| 2 | D–659–0062 | 2" | PLUG | X | |
| 3 | CHA–1603 | 1" | RECEPTACLE | X | |
| 4 | CHA–1604 | 2" | RECEPTACLE | X | |
| 5 | CHA–0098 | 1" | PLUG | | X |
| 6 | CHA–0100 | 2" | PLUG | | X |
| 7 | CHA–0311 | 1" | RECEPTACLE | | X |
| 8 | CHA–0312 | 2" | RECEPTACLE | | X |

If this document is printed it becomes uncontrolled. Check for the latest revision

© 2006–2011 Tyco Electronics. All rights reserved

Raychem MTC CUSTOMER DRAWING

| DWG. NO. | REV |
|---|---|
| MTC100Q–SHX–X2X–XXX | K |
| CAD FILE: MTC100Q–SHX–X2X–XXX | SHEET 3 OF 3 |

SHEET 3 DWG NO. MTC100Q–SHX–X2X–XXX

Компания «ЭлектроПласт» предлагает заключение долгосрочных отношений при поставках импортных электронных компонентов на взаимовыгодных условиях!

Наши преимущества:

- Оперативные поставки широкого спектра электронных компонентов отечественного и импортного производства напрямую от производителей и с крупнейших мировых складов;
- Поставка более 17-ти миллионов наименований электронных компонентов;
- Поставка сложных, дефицитных, либо снятых с производства позиций;
- Оперативные сроки поставки под заказ (от 5 рабочих дней);
- Экспресс доставка в любую точку России;
- Техническая поддержка проекта, помощь в подборе аналогов, поставка прототипов;
- Система менеджмента качества сертифицирована по Международному стандарту ISO 9001;
- Лицензия ФСБ на осуществление работ с использованием сведений, составляющих государственную тайну;
- Поставка специализированных компонентов (Xilinx, Altera, Analog Devices, Intersil, Interpoint, Microsemi, Aeroflex, Peregrine, Syfer, Eurofarad, Texas Instrument, Miteq, Cobham, E2V, MA-COM, Hittite, Mini-Circuits,General Dynamics и др.);

Помимо этого, одним из направлений компании «ЭлектроПласт» является направление «Источники питания». Мы предлагаем Вам помощь Конструкторского отдела:

- Подбор оптимального решения, техническое обоснование при выборе компонента;
- Подбор аналогов;
- Консультации по применению компонента;
- Поставка образцов и прототипов;
- Техническая поддержка проекта;
- Защита от снятия компонента с производства.

**Как с нами связаться**

**Телефон:** 8 (812) 309 58 32 (многоканальный)
**Факс:** 8 (812) 320-02-42
**Электронная почта:** org@eplast1.ru
**Адрес:** 198099, г. Санкт-Петербург, ул. Калинина, дом 2, корпус 4, литера А.