THIS DRAWING IS UNPUBLISHED. RELEASED FOR PUBLICATION –,– .
© COPYRIGHT 2010 BY TYCO ELECTRONICS CORPORATION. ALL RIGHTS RESERVED.

LOC	DIST
DW	—

REVISIONS

P	LTR	DESCRIPTION	DATE	DWN	APVD
	B2	REVISED (ECR-12-009552)	21MAY'12	JC	WK

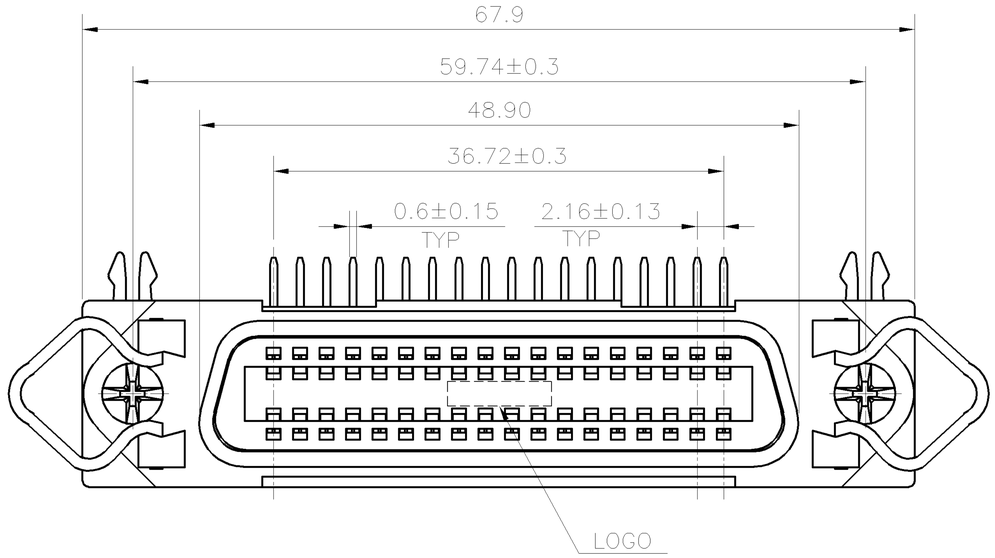

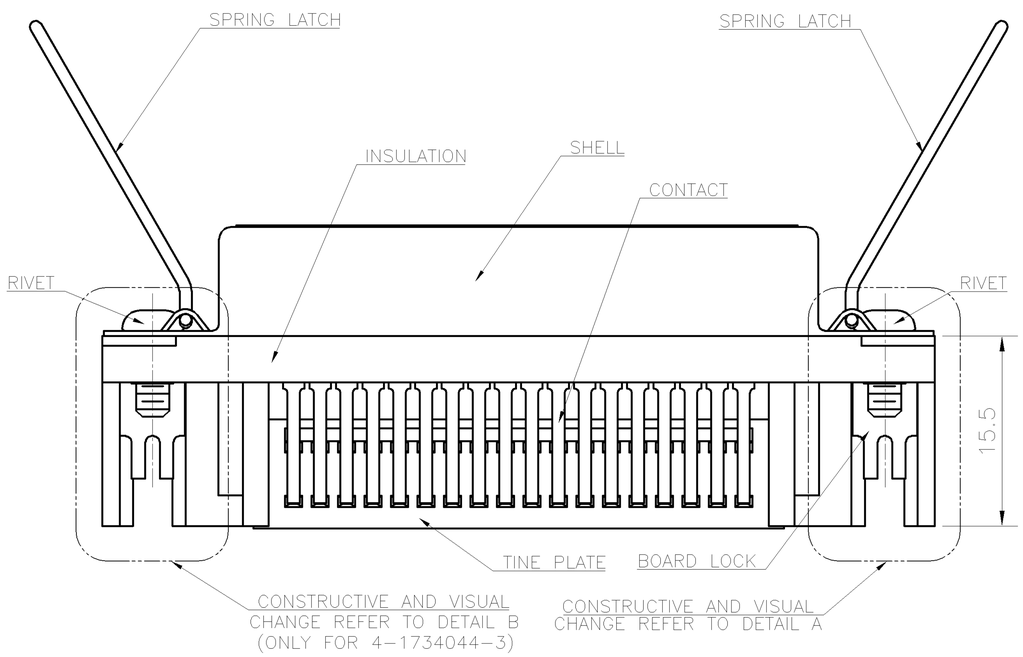

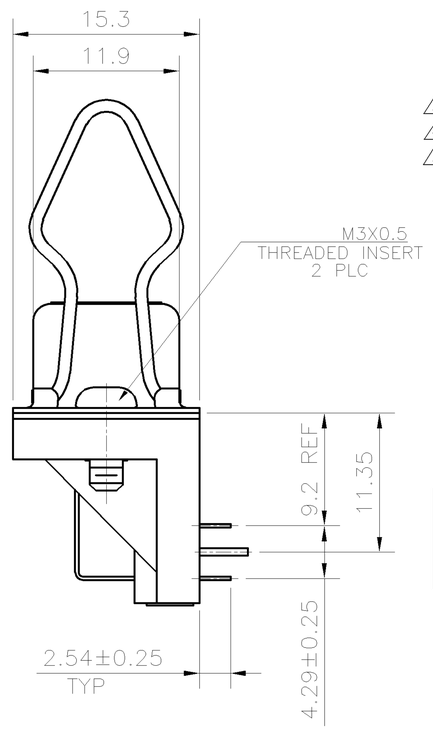

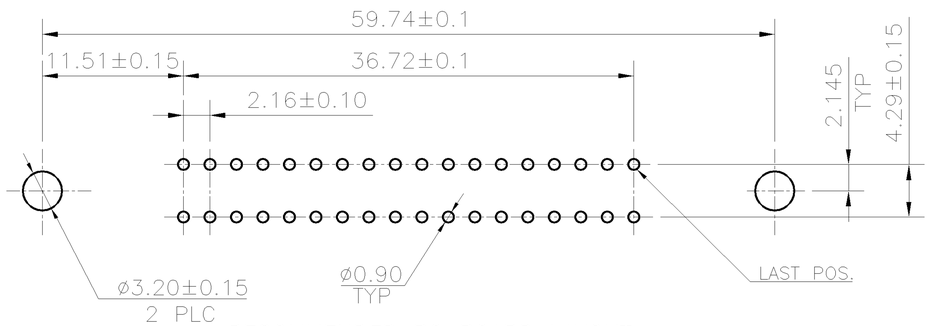

RECOMMENDED PC BOARD LAYOUT

NOTE:
1. MATERIAL:
   HOUSING: THERMOPLASTIC WITH GLASS-FIBER FILLED, UL 94V-0 RATED, COLOR: SEE TABLE.
   TINE PLATE: THERMOPLASTIC WITH GLASS-FIBER FILLED, UL 94V-0 RATED, COLOR: SEE TABLE
   CONTACTS: COPPER ALLOY.
   BOARD LOCK: BRASS.
   SPRING LATCH: STAINLESS STEEL
   SHELL: STEEL.
   RIVET: BRASS.
2. FINISH:
   CONTACT: (SEE TABLE) GOLD PLATING ON CONTACT AREA, 2.54μm [100μ"] MIN. TIN-CU ON SOLDER TAIL, 1.27μm [50μ"] MIN. NICKEL UNDERPLATED ALL OVER.
   SHELL: 1.27μm [50μ"] MIN. NICKEL PLATED.
   BOARD LOCK: 3.81μm [150μ"] MIN. TIN-CU PLATED.
   RIVET: 1.27μm [50μ"] MIN. NICKEL PLATED.
3. SEE SHEET 4 FOR DIFFERENT POINT EXPLANATION.
4. SEE SHEET 3 FOR DIFFERENT POINT EXPLANATION.
5. SEE SHEET 4 FOR DIFFERENT POINT EXPLANATION.

	GROUND TABS	HOUSING & TINE PLATE COLOR	LOCK TYPE	MIN. THICKNESS	PART NUMBER
	W/O	BLACK	5	GOLD FLASH	5-1734044-3
	W/O	BLACK	4	GOLD FLASH	4-1734044-3
OBSOLETED	W/	BLACK	3 RIVET(M3)	0.381um [15u"]	3-1734044-3
	W/O	BURGUNDY	SCREW	0.381um [15u"]	2-1734044-1
	W/O	BLACK	3 RIVET(M3)	0.381um [15u"]	1-1734044-3
	W/O	BLACK	RIVET	0.381um [15u"]	1-1734044-2
	W/O	BLACK	SCREW	0.381um [15u"]	1-1734044-1
	W/O	BLACK	3 RIVET(M3)	GOLD FLASH	1734044-3
	W/O	BLACK	RIVET	GOLD FLASH	1734044-2
	W/O	BLACK	SCREW	GOLD FLASH	1734044-1

THIS DRAWING IS A CONTROLLED DOCUMENT.

DIMENSIONS: mm

TOLERANCES UNLESS OTHERWISE SPECIFIED:

0 PLC	± 0.38
1 PLC	± 0.25
2 PLC	± 0.13
3 PLC	± 0.05
4 PLC	± –
ANGLES	± 3°

MATERIAL: SEE NOTES

FINISH: SEE NOTES

DWN	S. CHIEN	27OCT2008
CHK	S. CHIEN	27OCT2008
APVD	W. KODAMA	27OCT2008
PRODUCT SPEC	108-57098	
APPLICATION SPEC	—	
WEIGHT	GRAMS	

TE Connectivity

NAME: RECEPTACLE ASSEMBLY, 36P RIGHT ANGLE, CENTRONICS.

SIZE	CAGE CODE	DRAWING NO	RESTRICTED TO
A3	00779	C-1734044	—

CUSTOMER DRAWING | SCALE — | SHEET 1 OF 5 | REV B2

THIS DRAWING IS UNPUBLISHED. RELEASED FOR PUBLICATION -,- .
© COPYRIGHT 2010 BY TYCO ELECTRONICS CORPORATION. ALL RIGHTS RESERVED.

LOC	DIST
DW	—

REVISIONS

P	LTR	DESCRIPTION	DATE	DWN	APVD
		SEE SHEET 1.			

DETAIL A

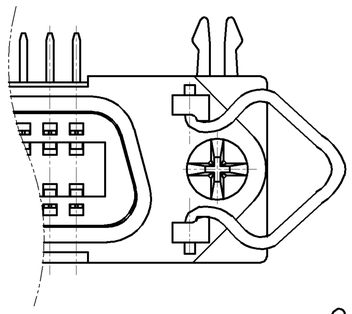

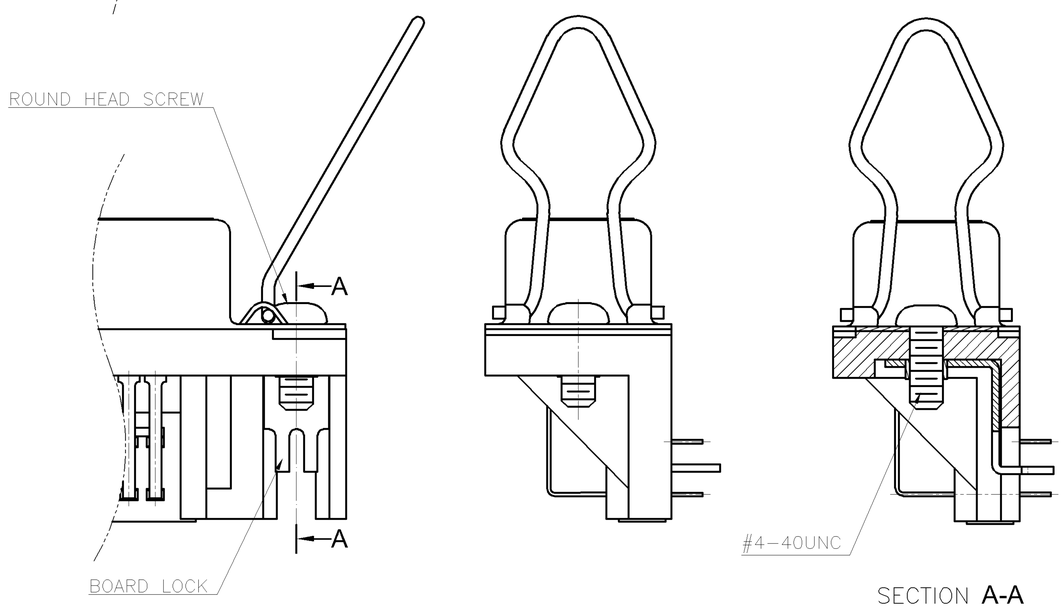

SECTION A-A

FOR X-1734044-1

DETAIL A

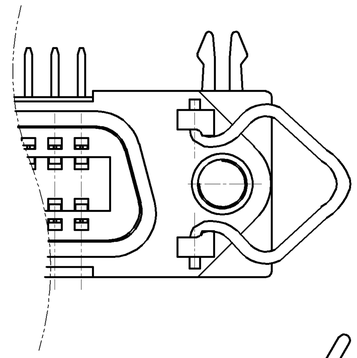

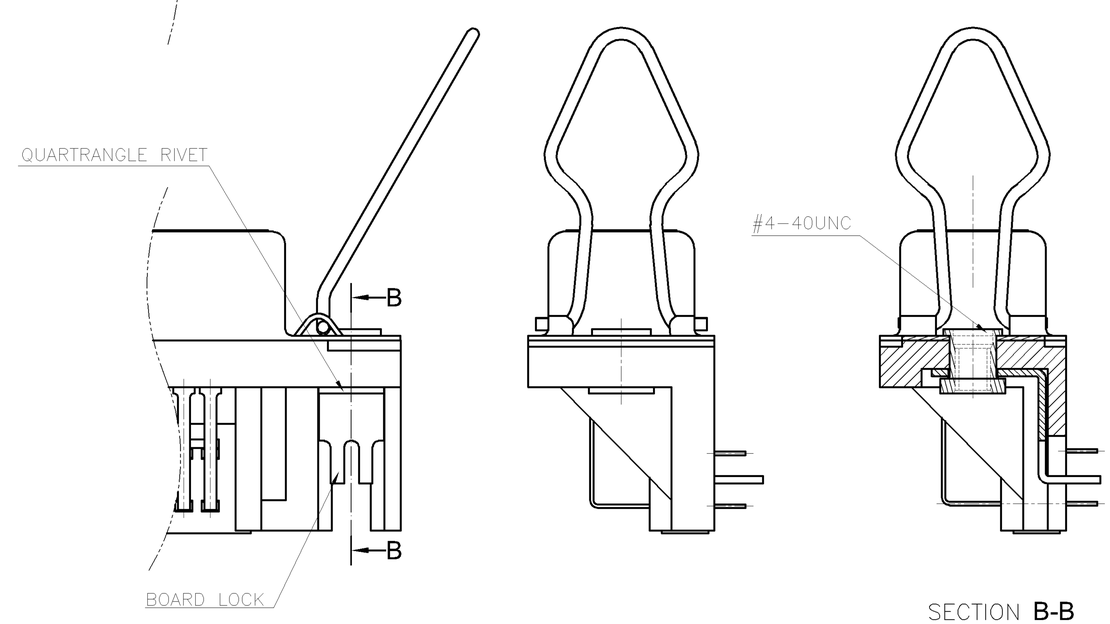

SECTION B-B

FOR X-1734044-2

THIS DRAWING IS A CONTROLLED DOCUMENT.

DIMENSIONS: mm

TOLERANCES UNLESS OTHERWISE SPECIFIED:

0 PLC	± –
1 PLC	± –
2 PLC	± –
3 PLC	± –
4 PLC	± –
ANGLES	± –

MATERIAL –

FINISH –

DWN –
CHK –
APVD –
PRODUCT SPEC –
APPLICATION SPEC –
WEIGHT –

TE Connectivity

NAME

RECEPTACLE ASSEMBLY, 36P
RIGHT ANGLE, CENTRONICS.

SIZE	CAGE CODE	DRAWING NO	RESTRICTED TO
A3	00779	C-1734044	—

CUSTOMER DRAWING | SCALE — | SHEET 2 OF 5 | REV B2

THIS DRAWING IS UNPUBLISHED. RELEASED FOR PUBLICATION – , – .
© COPYRIGHT 2010 BY TYCO ELECTRONICS CORPORATION. ALL RIGHTS RESERVED.

LOC	DIST
DW	–

REVISIONS

P	LTR	DESCRIPTION	DATE	DWN	APVD
		SEE SHEET 1.			

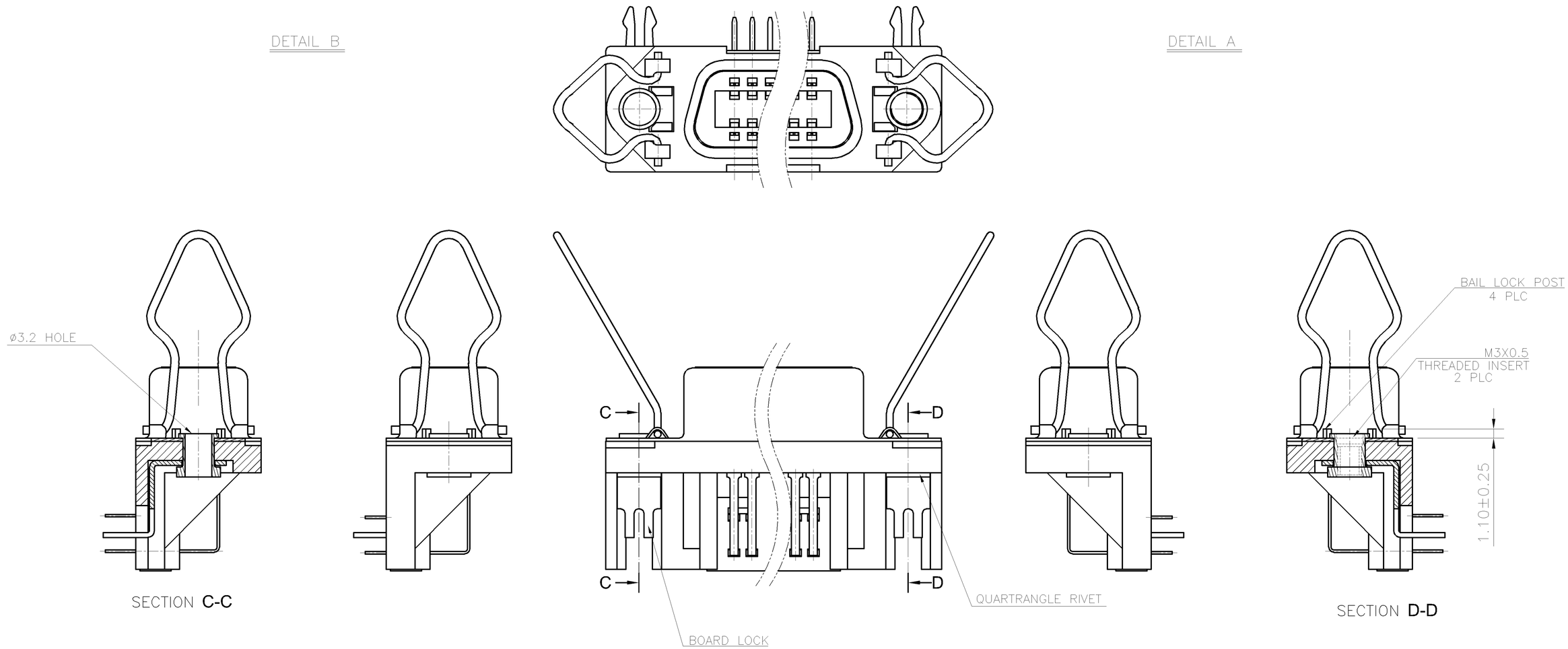

ONLY FOR 4–1734044–3 (4)

THIS DRAWING IS A CONTROLLED DOCUMENT.

DIMENSIONS: mm

TOLERANCES UNLESS OTHERWISE SPECIFIED:

0 PLC	± –
1 PLC	± –
2 PLC	± –
3 PLC	± –
4 PLC	± –
ANGLES	± –

MATERIAL –

FINISH –

DWN –
CHK –
APVD –
PRODUCT SPEC –
APPLICATION SPEC –
WEIGHT –

TE Connectivity

NAME

RECEPTACLE ASSEMBLY, 36P
RIGHT ANGLE, CENTRONICS.

SIZE	CAGE CODE	DRAWING NO	RESTRICTED TO
A3	00779	C–1734044	–

CUSTOMER DRAWING | SCALE – | SHEET 3 OF 5 | REV B2

THIS DRAWING IS UNPUBLISHED. RELEASED FOR PUBLICATION – , – .
© COPYRIGHT 2010 BY TYCO ELECTRONICS CORPORATION. ALL RIGHTS RESERVED.

LOC	DIST
DW	—

REVISIONS

P	LTR	DESCRIPTION	DATE	DWN	APVD
		SEE SHEET 1.			

DETAIL A

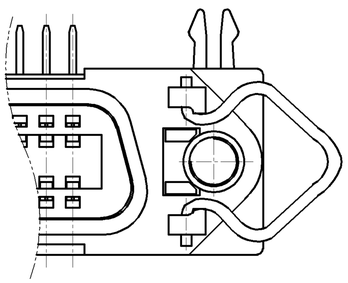

DETAIL A

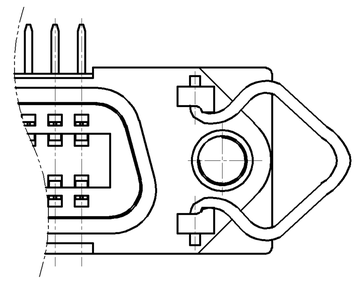

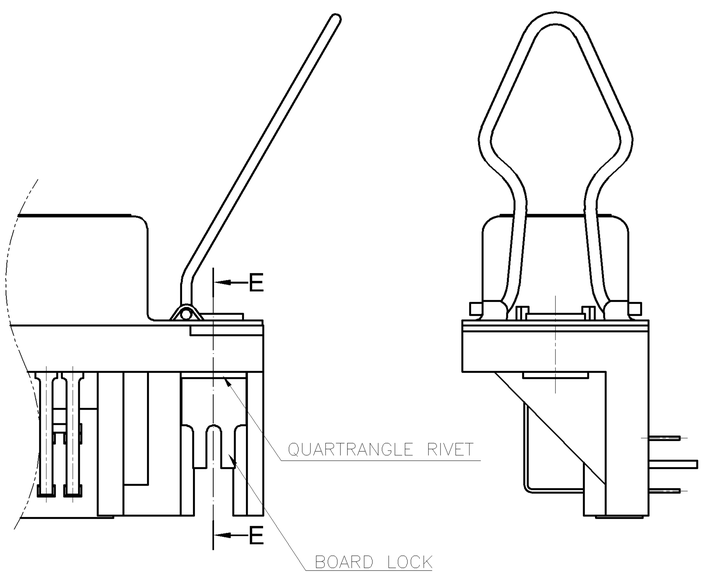

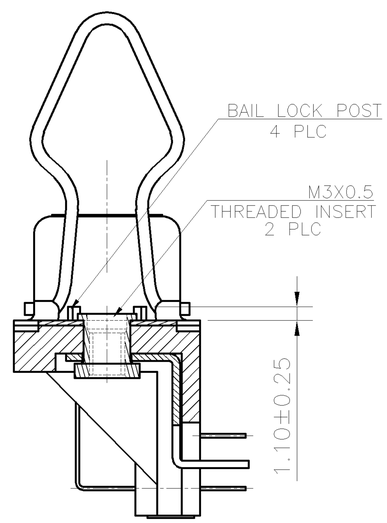

SECTION **E-E**

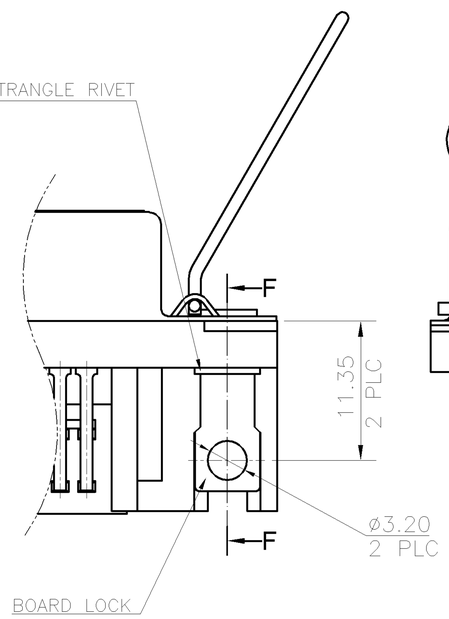

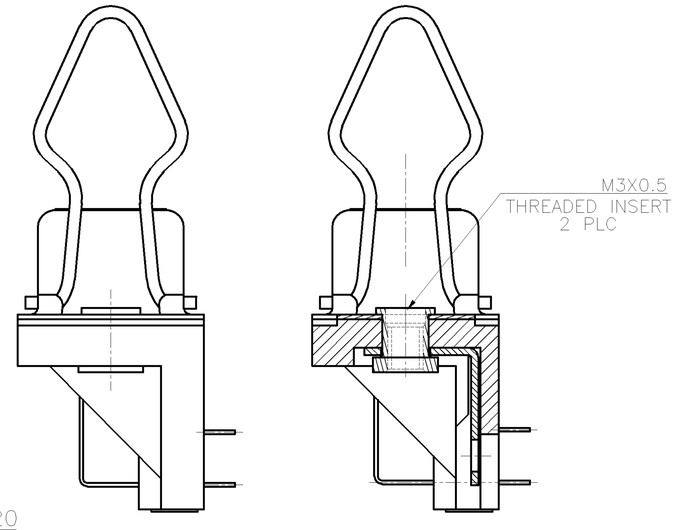

SECTION **F-F**

FOR 1734044–3, 1–1734044–3, 3–1734044–3 △3

ONLY FOR 5–1734044–3 △5

THIS DRAWING IS A CONTROLLED DOCUMENT.

DIMENSIONS: mm

TOLERANCES UNLESS OTHERWISE SPECIFIED:

0 PLC	± 0.38
1 PLC	± 0.25
2 PLC	± 0.13
3 PLC	± 0.05
4 PLC	± –
ANGLES	± 3°

MATERIAL –

FINISH –

DWN –
CHK –
APVD –
PRODUCT SPEC —
APPLICATION SPEC —
WEIGHT —

CUSTOMER DRAWING

TE Connectivity

NAME

RECEPTACLE ASSEMBLY, 36P
RIGHT ANGLE, CENTRONICS.

SIZE	CAGE CODE	DRAWING NO	RESTRICTED TO
A3	00779	C–1734044	—

SCALE — SHEET 4 OF 5 REV B2

THIS DRAWING IS UNPUBLISHED. RELEASED FOR PUBLICATION –,– .
© COPYRIGHT 2010 BY TYCO ELECTRONICS CORPORATION. ALL RIGHTS RESERVED.

LOC	DIST
DW	–

REVISIONS

P	LTR	DESCRIPTION	DATE	DWN	APVD
		SEE SHEET 1.			

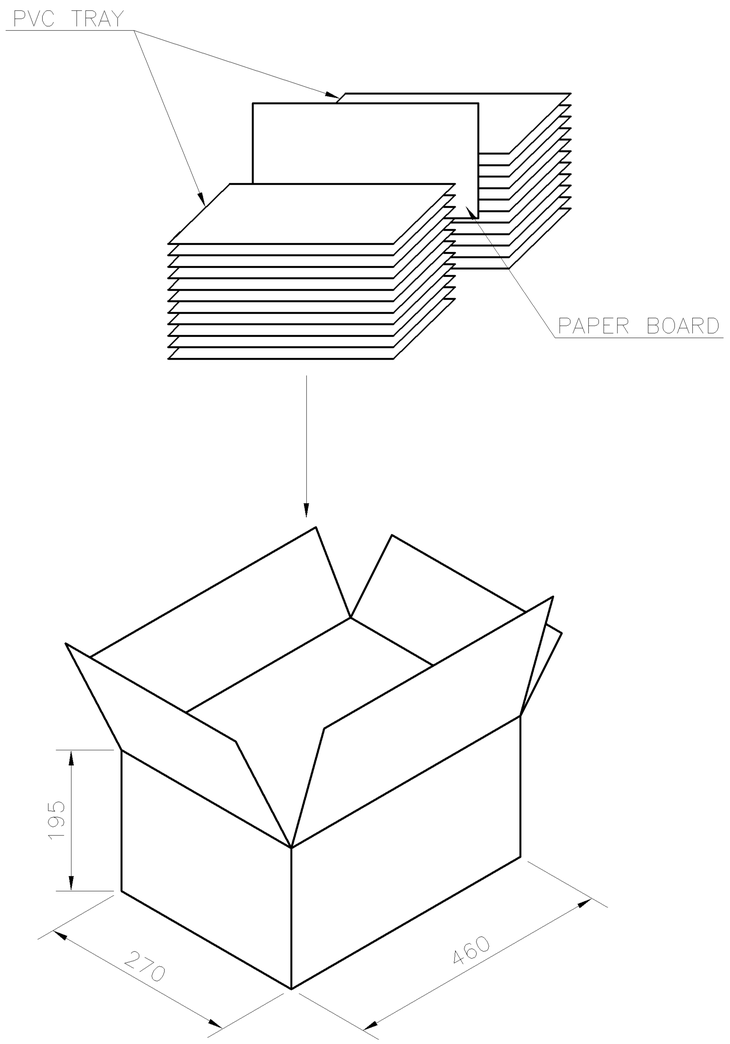

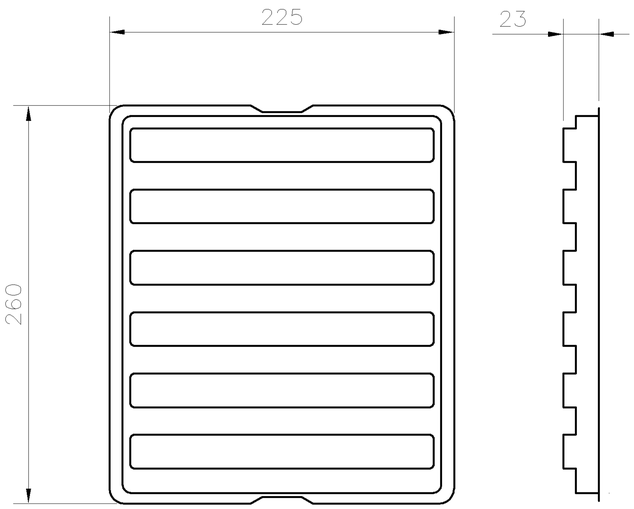

UPPER COVER

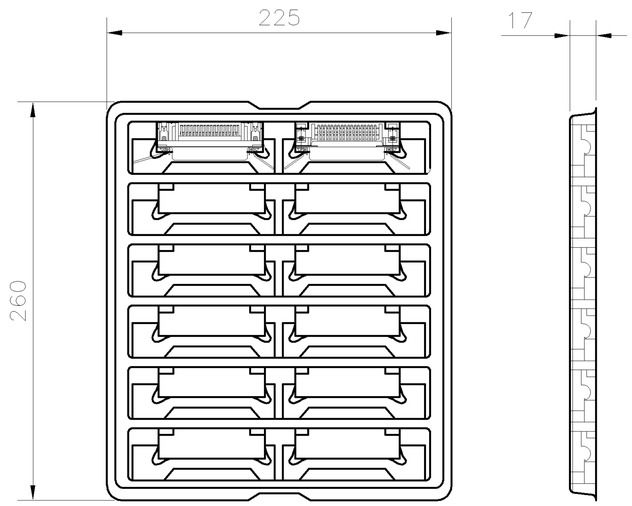

LOWER COVER

8.0	9.0	12	16	192
NET WEIGHT (KGS)	GROSS WEIGHT (KGS)	PCS/ TRAY	TRAYS/ OUTER BOX	QUANTITY

THIS DRAWING IS A CONTROLLED DOCUMENT.

DIMENSIONS: mm

TOLERANCES UNLESS OTHERWISE SPECIFIED:
0 PLC ± –
1 PLC ± –
2 PLC ± –
3 PLC ± –
4 PLC ± –
ANGLES ± –

MATERIAL –

FINISH –

DWN –
CHK –
APVD –
PRODUCT SPEC –
APPLICATION SPEC –
WEIGHT –

TE Connectivity

NAME
RECEPTACLE ASSEMBLY, 36P
RIGHT ANGLE, CENTRONICS.

SIZE	CAGE CODE	DRAWING NO	RESTRICTED TO
A3	00779	C-1734044	–

CUSTOMER DRAWING | SCALE – | SHEET 5 OF 5 | REV B2

Компания «ЭлектроПласт» предлагает заключение долгосрочных отношений при поставках импортных электронных компонентов на взаимовыгодных условиях!

Наши преимущества:

- Оперативные поставки широкого спектра электронных компонентов отечественного и импортного производства напрямую от производителей и с крупнейших мировых складов;
- Поставка более 17-ти миллионов наименований электронных компонентов;
- Поставка сложных, дефицитных, либо снятых с производства позиций;
- Оперативные сроки поставки под заказ (от 5 рабочих дней);
- Экспресс доставка в любую точку России;
- Техническая поддержка проекта, помощь в подборе аналогов, поставка прототипов;
- Система менеджмента качества сертифицирована по Международному стандарту ISO 9001;
- Лицензия ФСБ на осуществление работ с использованием сведений, составляющих государственную тайну;
- Поставка специализированных компонентов (Xilinx, Altera, Analog Devices, Intersil, Interpoint, Microsemi, Aeroflex, Peregrine, Syfer, Eurofarad, Texas Instrument, Miteq, Cobham, E2V, MA-COM, Hittite, Mini-Circuits,General Dynamics и др.);

Помимо этого, одним из направлений компании «ЭлектроПласт» является направление «Источники питания». Мы предлагаем Вам помощь Конструкторского отдела:

- Подбор оптимального решения, техническое обоснование при выборе компонента;
- Подбор аналогов;
- Консультации по применению компонента;
- Поставка образцов и прототипов;
- Техническая поддержка проекта;
- Защита от снятия компонента с производства.

Как с нами связаться

Телефон: 8 (812) 309 58 32 (многоканальный)
Факс: 8 (812) 320-02-42
Электронная почта: org@eplast1.ru
Адрес: 198099, г. Санкт-Петербург, ул. Калинина, дом 2, корпус 4, литера А.