THIS DRAWING IS UNPUBLISHED. RELEASED FOR PUBLICATION –,– .
© COPYRIGHT 2010 BY TYCO ELECTRONICS CORPORATION. ALL RIGHTS RESERVED.

| LOC | DIST |
|---|---|
| DW | — |

REVISIONS

| P | LTR | DESCRIPTION | DATE | DWN | APVD |
|---|---|---|---|---|---|
| | B2 | REVISED (ECR-12-009552) | 21MAY'12 | JC | WK |

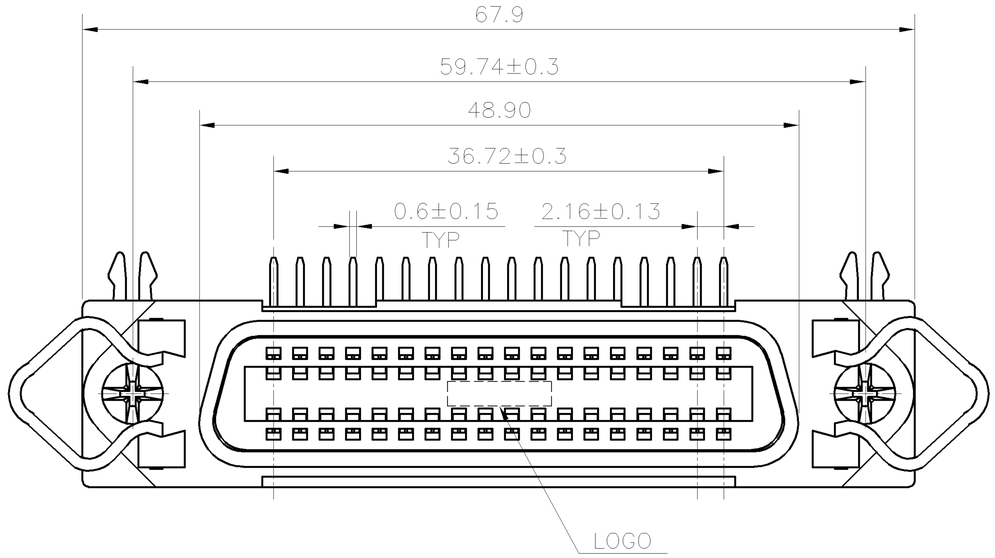


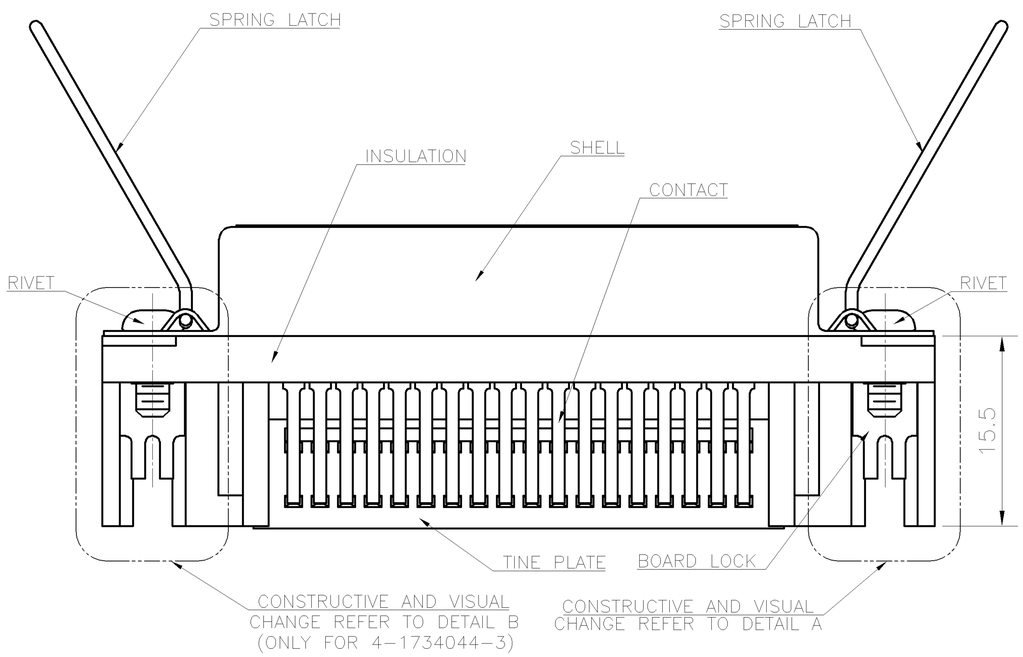


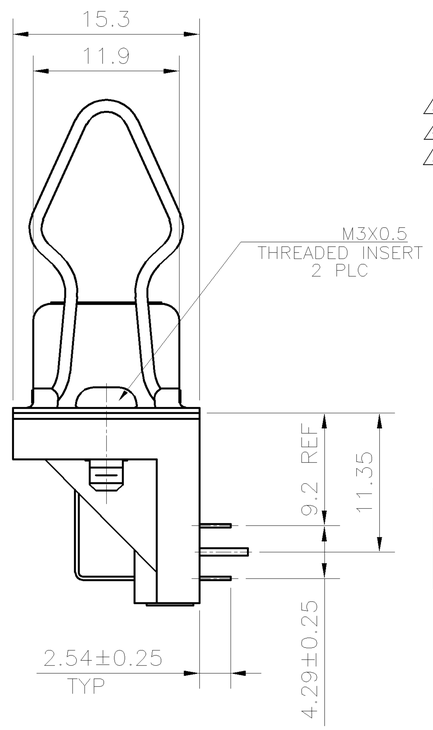


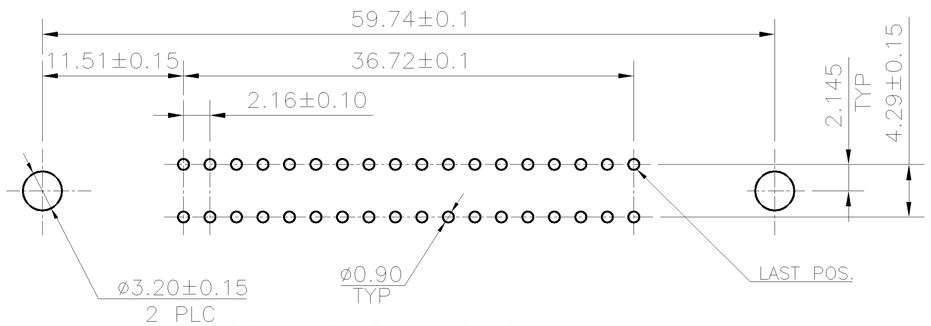


RECOMMENDED PC BOARD LAYOUT

NOTE:
1. MATERIAL:
   HOUSING: THERMOPLASTIC WITH GLASS-FIBER FILLED, UL 94V-0 RATED, COLOR: SEE TABLE.
   TINE PLATE: THERMOPLASTIC WITH GLASS-FIBER FILLED, UL 94V-0 RATED, COLOR: SEE TABLE
   CONTACTS: COPPER ALLOY.
   BOARD LOCK: BRASS.
   SPRING LATCH: STAINLESS STEEL
   SHELL: STEEL.
   RIVET: BRASS.
2. FINISH:
   CONTACT: (SEE TABLE) GOLD PLATING ON CONTACT AREA, 2.54μm [100μ"] MIN. TIN-CU ON SOLDER TAIL, 1.27μm [50μ"] MIN. NICKEL UNDERPLATED ALL OVER.
   SHELL: 1.27μm [50μ"] MIN. NICKEL PLATED.
   BOARD LOCK: 3.81μm [150μ"] MIN. TIN-CU PLATED.
   RIVET: 1.27μm [50μ"] MIN. NICKEL PLATED.
3. SEE SHEET 4 FOR DIFFERENT POINT EXPLANATION.
4. SEE SHEET 3 FOR DIFFERENT POINT EXPLANATION.
5. SEE SHEET 4 FOR DIFFERENT POINT EXPLANATION.

| | GROUND TABS | HOUSING & TINE PLATE COLOR | LOCK TYPE | MIN. THICKNESS | PART NUMBER |
|---|---|---|---|---|---|
| | W/O | BLACK | 5 | GOLD FLASH | 5-1734044-3 |
| | W/O | BLACK | 4 | GOLD FLASH | 4-1734044-3 |
| OBSOLETED | W/ | BLACK | 3 RIVET(M3) | 0.381um [15u"] | 3-1734044-3 |
| | W/O | BURGUNDY | SCREW | 0.381um [15u"] | 2-1734044-1 |
| | W/O | BLACK | 3 RIVET(M3) | 0.381um [15u"] | 1-1734044-3 |
| | W/O | BLACK | RIVET | 0.381um [15u"] | 1-1734044-2 |
| | W/O | BLACK | SCREW | 0.381um [15u"] | 1-1734044-1 |
| | W/O | BLACK | 3 RIVET(M3) | GOLD FLASH | 1734044-3 |
| | W/O | BLACK | RIVET | GOLD FLASH | 1734044-2 |
| | W/O | BLACK | SCREW | GOLD FLASH | 1734044-1 |

THIS DRAWING IS A CONTROLLED DOCUMENT.

DIMENSIONS: mm

TOLERANCES UNLESS OTHERWISE SPECIFIED:

| | |
|---|---|
| 0 PLC | ± 0.38 |
| 1 PLC | ± 0.25 |
| 2 PLC | ± 0.13 |
| 3 PLC | ± 0.05 |
| 4 PLC | ± – |
| ANGLES | ± 3° |

MATERIAL: SEE NOTES

FINISH: SEE NOTES

| | | |
|---|---|---|
| DWN | S. CHIEN | 27OCT2008 |
| CHK | S. CHIEN | 27OCT2008 |
| APVD | W. KODAMA | 27OCT2008 |
| PRODUCT SPEC | 108-57098 | |
| APPLICATION SPEC | — | |
| WEIGHT | GRAMS | |

TE Connectivity

NAME: RECEPTACLE ASSEMBLY, 36P RIGHT ANGLE, CENTRONICS.

| SIZE | CAGE CODE | DRAWING NO | RESTRICTED TO |
|---|---|---|---|
| A3 | 00779 | C-1734044 | — |

CUSTOMER DRAWING | SCALE — | SHEET 1 OF 5 | REV B2

THIS DRAWING IS UNPUBLISHED. RELEASED FOR PUBLICATION -,- .
© COPYRIGHT 2010 BY TYCO ELECTRONICS CORPORATION. ALL RIGHTS RESERVED.

| LOC | DIST |
|---|---|
| DW | — |

REVISIONS

| P | LTR | DESCRIPTION | DATE | DWN | APVD |
|---|---|---|---|---|---|
| | | SEE SHEET 1. | | | |

DETAIL A

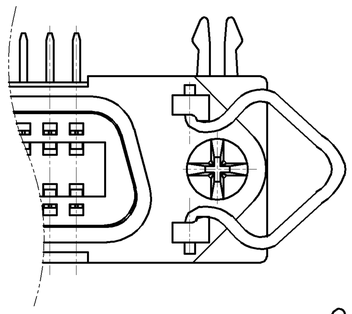

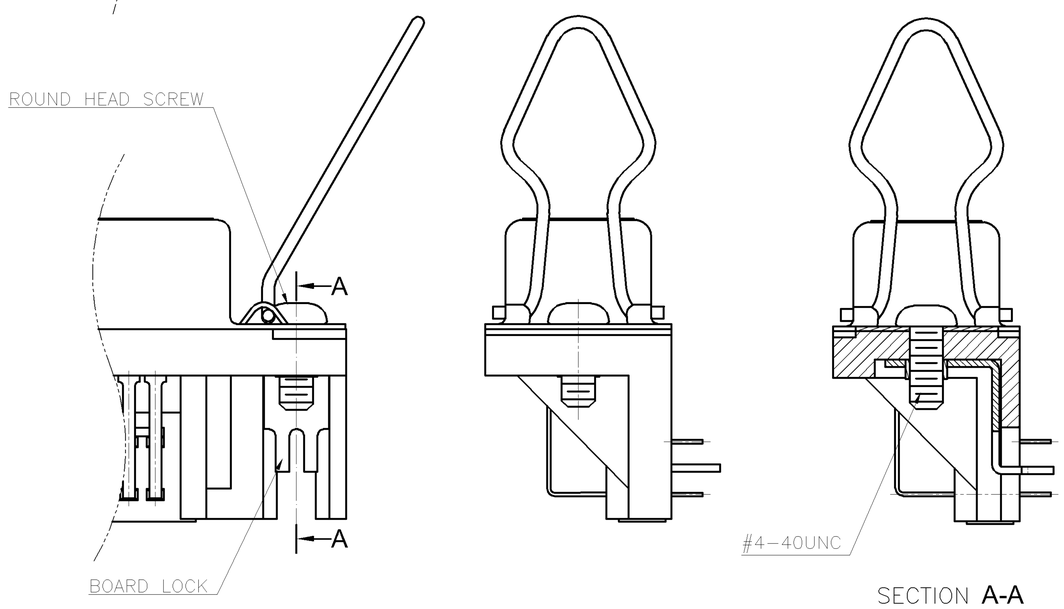


SECTION A-A

FOR X-1734044-1

DETAIL A

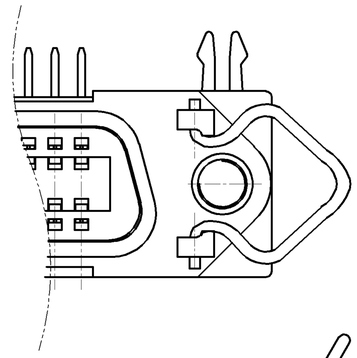

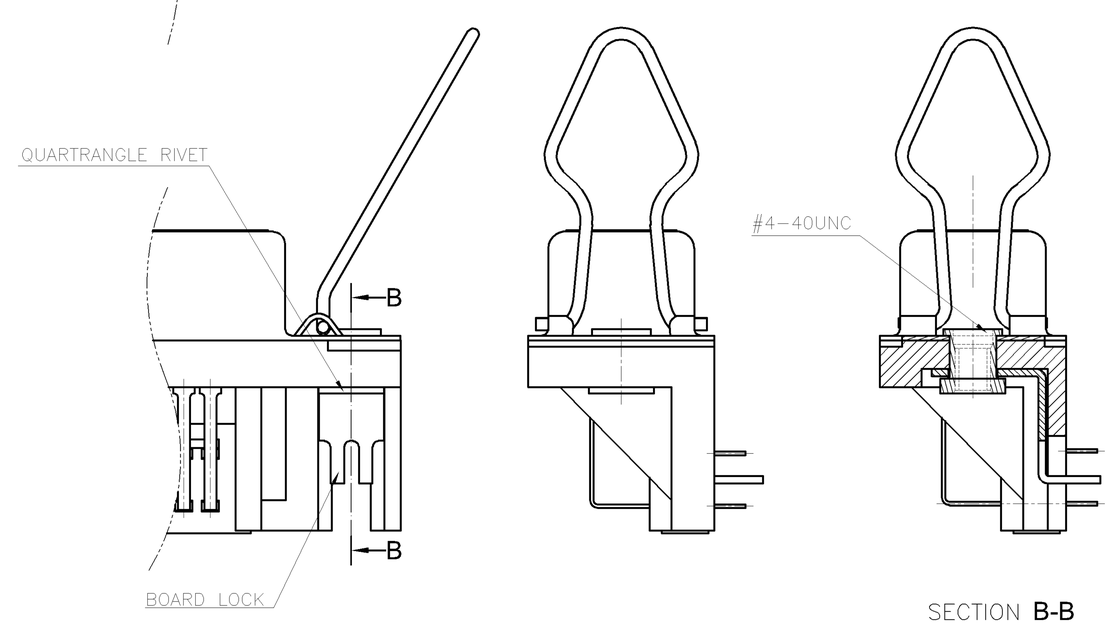


SECTION B-B

FOR X-1734044-2

THIS DRAWING IS A CONTROLLED DOCUMENT.

DIMENSIONS: mm

TOLERANCES UNLESS OTHERWISE SPECIFIED:

| | |
|---|---|
| 0 PLC | ± – |
| 1 PLC | ± – |
| 2 PLC | ± – |
| 3 PLC | ± – |
| 4 PLC | ± – |
| ANGLES | ± – |

MATERIAL –

FINISH –

DWN –
CHK –
APVD –
PRODUCT SPEC –
APPLICATION SPEC –
WEIGHT –

TE Connectivity

NAME

RECEPTACLE ASSEMBLY, 36P
RIGHT ANGLE, CENTRONICS.

| SIZE | CAGE CODE | DRAWING NO | RESTRICTED TO |
|---|---|---|---|
| A3 | 00779 | C-1734044 | — |

CUSTOMER DRAWING | SCALE — | SHEET 2 OF 5 | REV B2

THIS DRAWING IS UNPUBLISHED. RELEASED FOR PUBLICATION – , – .
© COPYRIGHT 2010 BY TYCO ELECTRONICS CORPORATION. ALL RIGHTS RESERVED.

| LOC | DIST |
|---|---|
| DW | – |

REVISIONS

| P | LTR | DESCRIPTION | DATE | DWN | APVD |
|---|---|---|---|---|---|
| | | SEE SHEET 1. | | | |

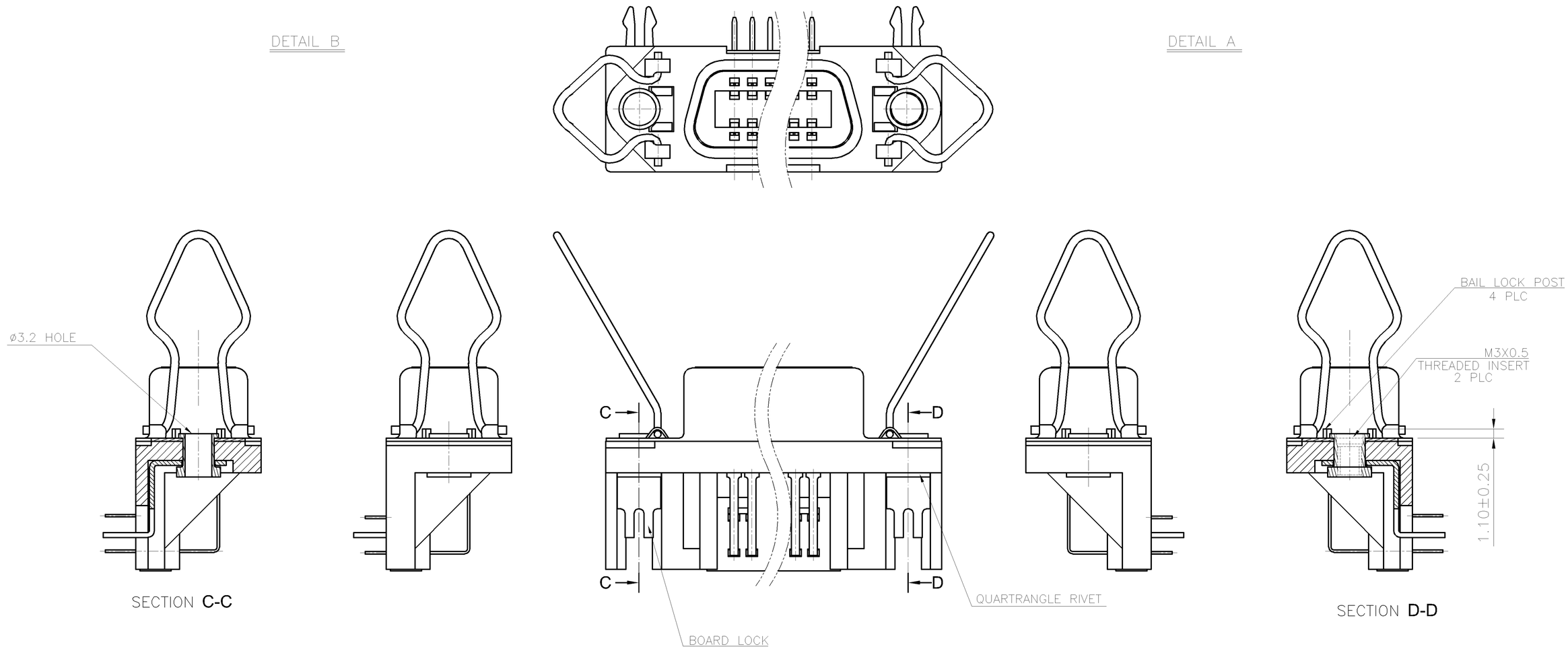


ONLY FOR 4–1734044–3 (4)

THIS DRAWING IS A CONTROLLED DOCUMENT.

DIMENSIONS: mm

TOLERANCES UNLESS OTHERWISE SPECIFIED:

| | |
|---|---|
| 0 PLC | ± – |
| 1 PLC | ± – |
| 2 PLC | ± – |
| 3 PLC | ± – |
| 4 PLC | ± – |
| ANGLES | ± – |

MATERIAL –

FINISH –

DWN –
CHK –
APVD –
PRODUCT SPEC –
APPLICATION SPEC –
WEIGHT –

TE Connectivity

NAME

RECEPTACLE ASSEMBLY, 36P
RIGHT ANGLE, CENTRONICS.

| SIZE | CAGE CODE | DRAWING NO | RESTRICTED TO |
|---|---|---|---|
| A3 | 00779 | C–1734044 | – |

CUSTOMER DRAWING | SCALE – | SHEET 3 OF 5 | REV B2

THIS DRAWING IS UNPUBLISHED. RELEASED FOR PUBLICATION – , – .
© COPYRIGHT 2010 BY TYCO ELECTRONICS CORPORATION. ALL RIGHTS RESERVED.

| LOC | DIST |
|---|---|
| DW | — |

REVISIONS

| P | LTR | DESCRIPTION | DATE | DWN | APVD |
|---|---|---|---|---|---|
| | | SEE SHEET 1. | | | |

DETAIL A

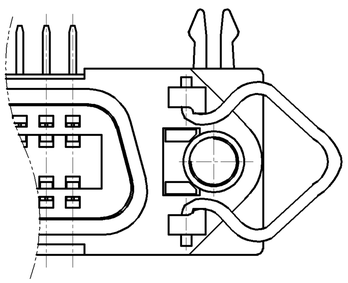

DETAIL A

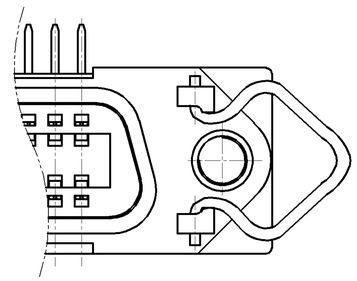

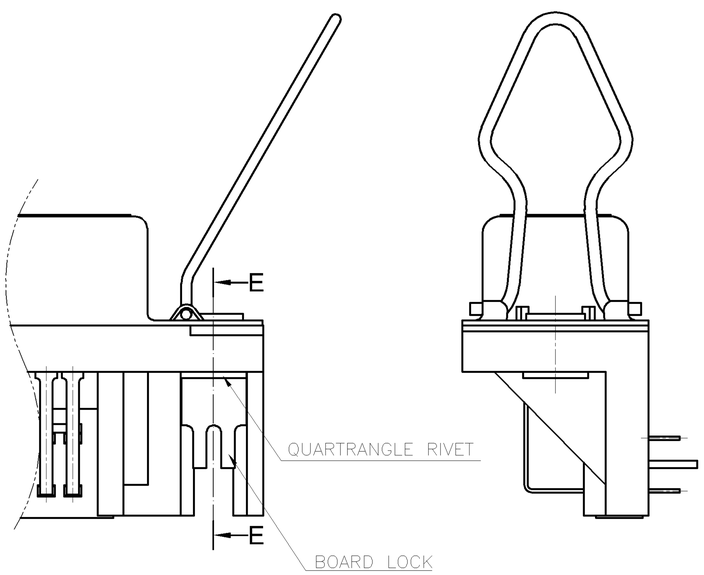


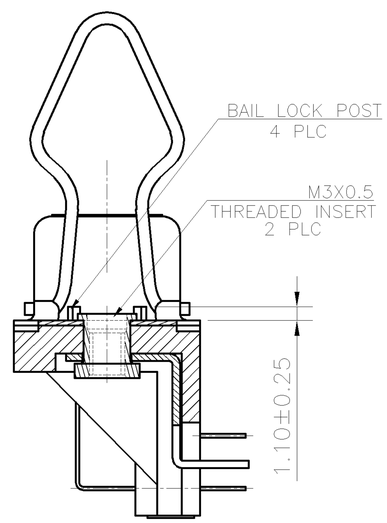


SECTION **E-E**

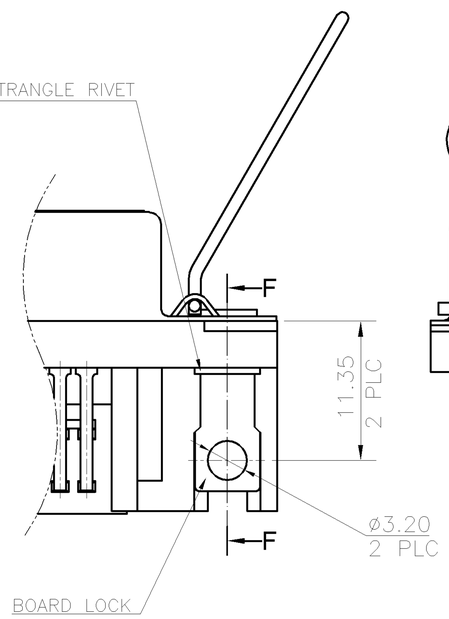


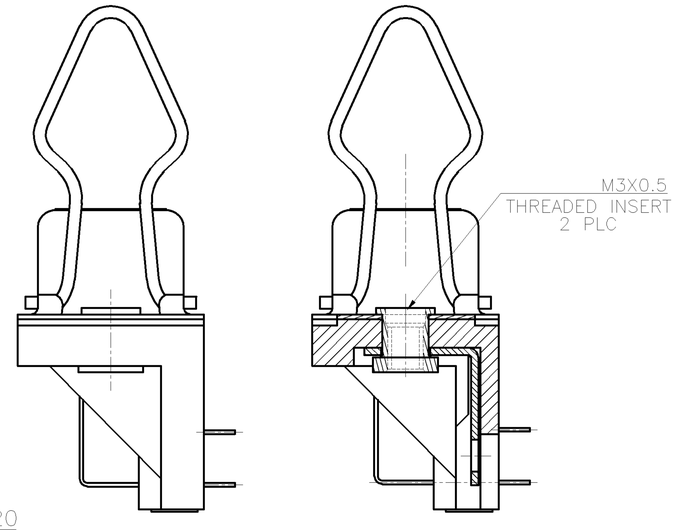


SECTION **F-F**

FOR 1734044–3, 1–1734044–3, 3–1734044–3 △3

ONLY FOR 5–1734044–3 △5

THIS DRAWING IS A CONTROLLED DOCUMENT.

DIMENSIONS: mm

TOLERANCES UNLESS OTHERWISE SPECIFIED:

| | |
|---|---|
| 0 PLC | ± 0.38 |
| 1 PLC | ± 0.25 |
| 2 PLC | ± 0.13 |
| 3 PLC | ± 0.05 |
| 4 PLC | ± – |
| ANGLES | ± 3° |

MATERIAL –

FINISH –

DWN –
CHK –
APVD –
PRODUCT SPEC —
APPLICATION SPEC —
WEIGHT —

CUSTOMER DRAWING

TE Connectivity

NAME

RECEPTACLE ASSEMBLY, 36P
RIGHT ANGLE, CENTRONICS.

| SIZE | CAGE CODE | DRAWING NO | RESTRICTED TO |
|---|---|---|---|
| A3 | 00779 | C–1734044 | — |

SCALE — SHEET 4 OF 5 REV B2

THIS DRAWING IS UNPUBLISHED. RELEASED FOR PUBLICATION –,– .
© COPYRIGHT 2010 BY TYCO ELECTRONICS CORPORATION. ALL RIGHTS RESERVED.

| LOC | DIST |
|---|---|
| DW | – |

REVISIONS

| P | LTR | DESCRIPTION | DATE | DWN | APVD |
|---|---|---|---|---|---|
| | | SEE SHEET 1. | | | |

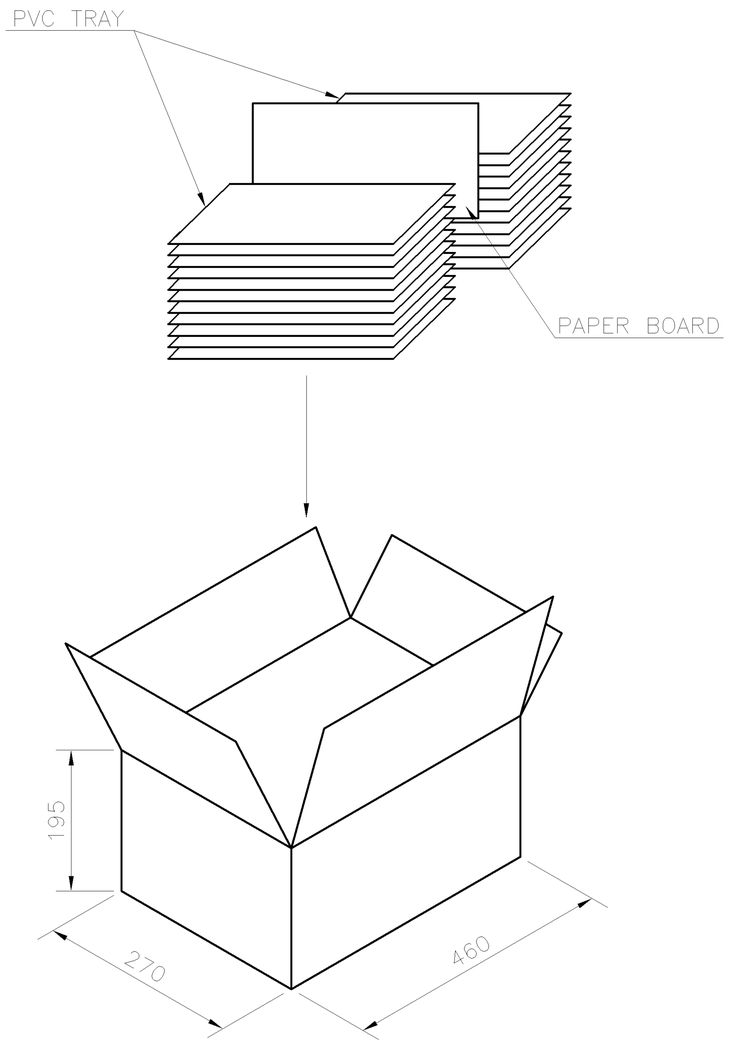


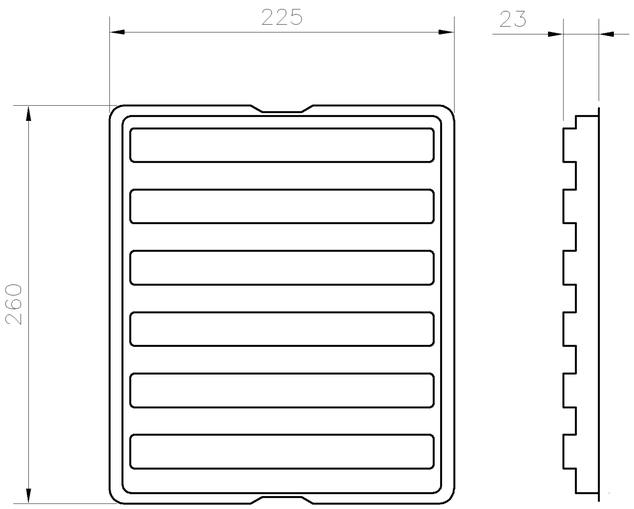


UPPER COVER

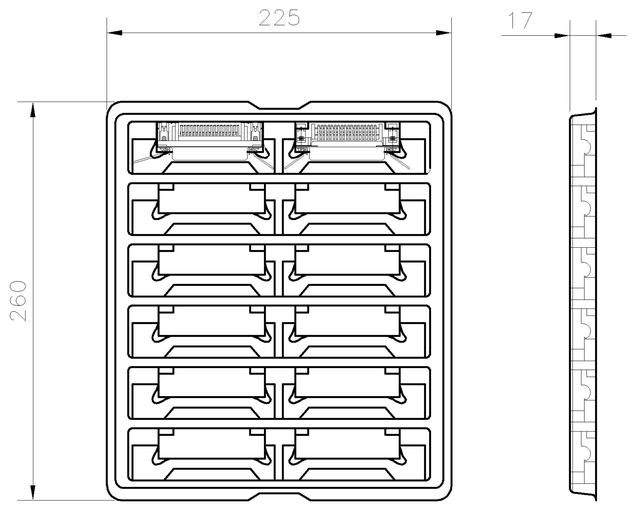


LOWER COVER

| 8.0 | 9.0 | 12 | 16 | 192 |
|---|---|---|---|---|
| NET WEIGHT (KGS) | GROSS WEIGHT (KGS) | PCS/ TRAY | TRAYS/ OUTER BOX | QUANTITY |

THIS DRAWING IS A CONTROLLED DOCUMENT.

DIMENSIONS: mm

TOLERANCES UNLESS OTHERWISE SPECIFIED:
0 PLC ± –
1 PLC ± –
2 PLC ± –
3 PLC ± –
4 PLC ± –
ANGLES ± –

MATERIAL –

FINISH –

DWN –
CHK –
APVD –
PRODUCT SPEC –
APPLICATION SPEC –
WEIGHT –

TE Connectivity

NAME
RECEPTACLE ASSEMBLY, 36P
RIGHT ANGLE, CENTRONICS.

| SIZE | CAGE CODE | DRAWING NO | RESTRICTED TO |
|---|---|---|---|
| A3 | 00779 | C-1734044 | – |

CUSTOMER DRAWING | SCALE – | SHEET 5 OF 5 | REV B2

Компания «ЭлектроПласт» предлагает заключение долгосрочных отношений при поставках импортных электронных компонентов на взаимовыгодных условиях!

Наши преимущества:

- Оперативные поставки широкого спектра электронных компонентов отечественного и импортного производства напрямую от производителей и с крупнейших мировых складов;
- Поставка более 17-ти миллионов наименований электронных компонентов;
- Поставка сложных, дефицитных, либо снятых с производства позиций;
- Оперативные сроки поставки под заказ (от 5 рабочих дней);
- Экспресс доставка в любую точку России;
- Техническая поддержка проекта, помощь в подборе аналогов, поставка прототипов;
- Система менеджмента качества сертифицирована по Международному стандарту ISO 9001;
- Лицензия ФСБ на осуществление работ с использованием сведений, составляющих государственную тайну;
- Поставка специализированных компонентов (Xilinx, Altera, Analog Devices, Intersil, Interpoint, Microsemi, Aeroflex, Peregrine, Syfer, Eurofarad, Texas Instrument, Miteq, Cobham, E2V, MA-COM, Hittite, Mini-Circuits,General Dynamics и др.);

Помимо этого, одним из направлений компании «ЭлектроПласт» является направление «Источники питания». Мы предлагаем Вам помощь Конструкторского отдела:

- Подбор оптимального решения, техническое обоснование при выборе компонента;
- Подбор аналогов;
- Консультации по применению компонента;
- Поставка образцов и прототипов;
- Техническая поддержка проекта;
- Защита от снятия компонента с производства.

**Как с нами связаться**

**Телефон:** 8 (812) 309 58 32 (многоканальный)
**Факс:** 8 (812) 320-02-42
**Электронная почта:** org@eplast1.ru
**Адрес:** 198099, г. Санкт-Петербург, ул. Калинина, дом 2, корпус 4, литера А.