Amphenol

Amphenol-Tuchel Electronics GmbH

C 091 A/B/D Series

Circular Connectors

The Company

Amphenol-Tuchel Electronics GmbH is a member of the USA based Amphenol Corporation. With our own global presence we offer our customers exceptional technical support and service worldwide in the areas of development, production and distribution. Amphenol-Tuchel Electronics GmbH has a successful history as a partner to our customers and sets standards for connector technology.

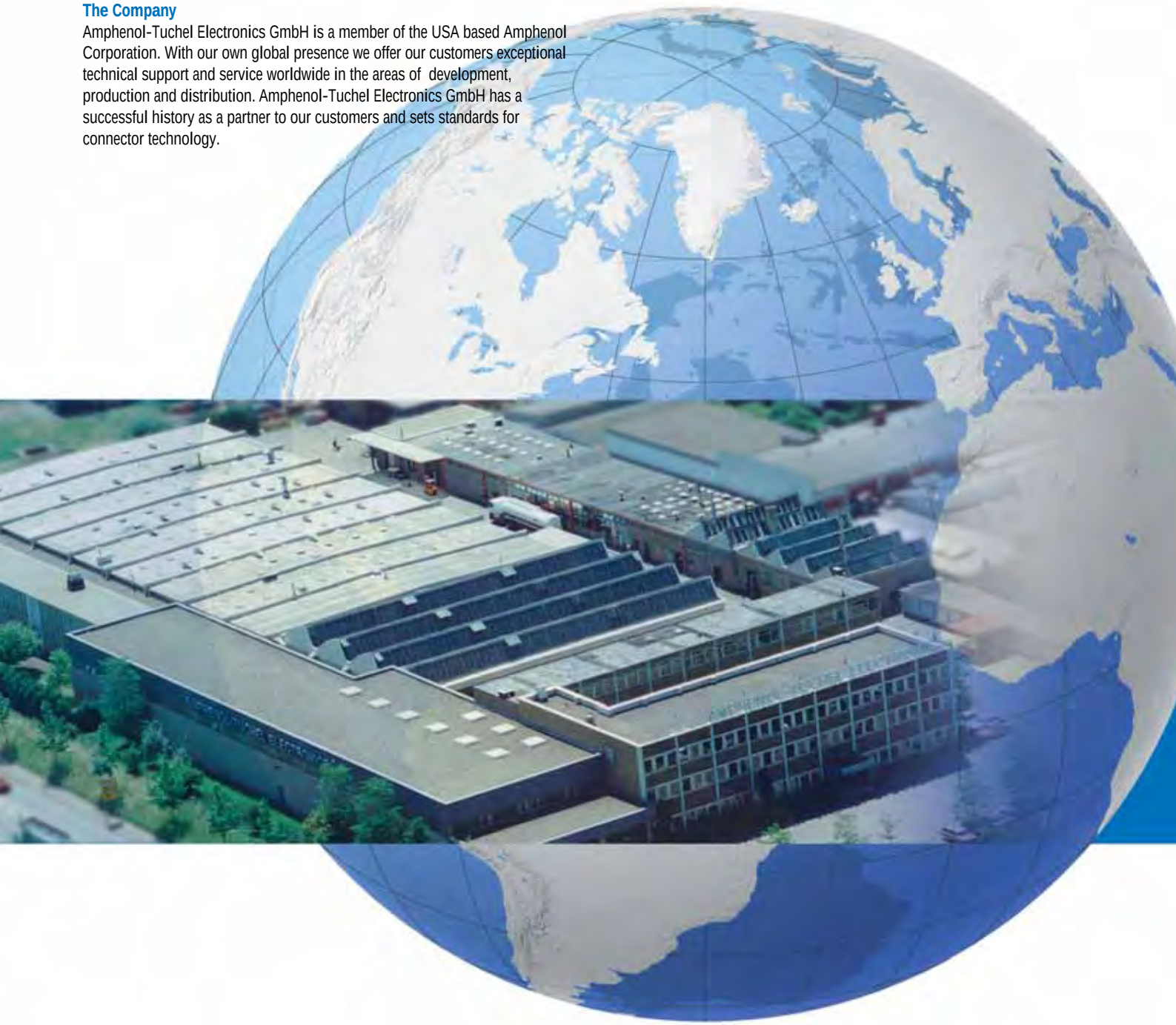

Quality

From the beginning of the development process, Amphenol-Tuchel Electronics GmbH gives quality considerations the top priority. Meeting customer requirements is the main focus of the product development process.
Interdisciplinary project teams with diverse backgrounds from marketing, product engineering and production guarantee the development and production of robust and reliable connector solutions.
Our quality assessment begins with the initial contact to the customer and extends through the life of the product. A satisfied customer is the measure of our success.
We strive to use environmentally friendly processes that minimize the waste of natural resources and introduction of toxins into the environment.

Certifications: TS 16949
ISO 14001
ISO 9000:2000

Content

Page

C 091 A 5

Circular connectors with metal screw coupling and plastic back shell. Contacts: 2 to 8, 12 and 14, IP 40 when properly mated.

C 091 B 19

Circular connectors with plastic bayonet coupling and plastic back shell. Contacts: 3 to 8, 12 and 14. IP 40 when properly mated.

C 091 D 33

Circular connectors with metal screw coupling and metal back shell. Contacts: 3 to 8, 12 and 14, IP 65 and IP 67 when properly mated.

Crimp contacts 43

Accessories 44

Remarks / Safety classification 46

IP Code 47

Summary of Part Numbers 48

C 091 A

Main Features

- Metal locking ring; screw locking according to DIN EN 60130-9 / IEC 60130-9
- Number of contacts: 2 – 8, 12 and 14 contacts
- Internal strain relief
- Good shielding effectiveness when mated and locked
- Male and female cable connectors
  - Straight or right angled
  - Solder connection: 2 – 8, 12 and 14 contacts
  - Crimp connection: 2 – 8 contacts
  - With cable sleeve for max. cable diameter 6 mm, or
  - With cable glands for cable diameter 4 – 6 mm or 6 – 8 mm
- Male and female receptacles
  - Panel mount types for front or rear panel mounting
  - Pcb mount types, straight or right angled
  - With dip solder contacts of various contact lengths
  - Solder connection: 2 – 8, 12 and 14 contacts
  - Crimp connection: 2 – 8 contacts
- Coloured back shells optional
- UL registered under file number E 63 093 UL

[1)]

UNDERWRITERS LABORATORIES INC.

[1)] In general approvals refer to representative versions of the connector series. Test report upon request.

C 091 A

Characteristics

General Characteristics	Standard	Characteristics									
Number of contacts View on termination side of male contact insert		2*+ 3	4	5	5 Stereo	6	7	7	8	12	14
		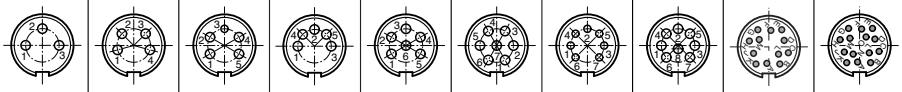									
Contact arrangement acc. to DIN Contact arrangement acc. to IEC		41 524 60130-9	– 60120-9	– –	41 524 60130-9	45 322 60130-9	– –	45 329 60130-9	45 326 60130-9	– –	– –
Electrical Characteristics											
Rated voltage	IEC 60664-1	300 V ≈			100 V ≈	300 V ≈		100 V ≈		150 V ≈	
Rated voltage	UL 1977	250 V								60 V	
Rated impulse withstand voltage	IEC 60664-1	1500 V			1200 V	1500 V		1200 V			
Pollution degree	IEC 60664-1	1									
Installation category	IEC 60664-1	I									
Insulation group	IEC 60664-1	II, 400 ≤ CTI < 600									
Current rating	IEC 60512-5-2 Test 5 b UL 1977	5 A / + 40 °C / + 104 °F please refer also to current derating curves page 45								3 A / + 40 °C / + 104 °F	
Insulation resistance	IEC 60512-3-1 Test 3 a	> 10^{10} Ω									
Contact resistance	IEC 60512-2-1 Test 2 a	< 5 m Ω									
Climatic Characteristics											
Climatic category	IEC 60068-1	40 / 100 / 56									
Temperature range	IEC 60068-1	- 40 °C ... + 100 °C / - 40 °F ... + 212 °F									
Mechanical Characteristics											
IP-degree	IEC 60529	IP 40									
Insertion and withdrawal forces	IEC 60512-13-2 Test 13 b	25 N 90.oz	30 N 110.oz	35 N 125.oz		50 N 180.oz	55 N 200.oz		60 N 220.oz	50 N 180.oz	
Mechanical operation	IEC 60512 Test 9 a	Silver ≥ 500 mating cycles Gold ≥ 1000 mating cycles									
Materials											
Housing material		coupling ring brass, strain relief, die cast, nickel plated									
Dielectric material		thermoplastic									
Contact plating		silver plated / gold plated **									
Further Characteristics											
Termination technique		solder, crimp								solder	
Wire gauge		solder: ≤ 0,5 mm² / 20 AWG crimp: 2 - 6 pol (excluding 5S): 0,09 - 1,00 mm² / 28 - 18 AWG crimp: 5S, 7, 7S and 8-pol.: 0,09 - 0,75 mm² / 28 - 20 AWG								≤ 0,25 mm²/24 AWG	
Flammability		UL 94 V0									
Locking system	IEC 60130-9	metal screw coupling; tightening torque 0,7 Nm									

Caution: Do not connect or disconnect under load. Metal housing parts shall be securely incorporated to protected ground.

*** 2 contact version: contact loading 1+3**

**** Remark for gold plated contacts:** In order to avoid brittle inter-metallic connections, gold-plated terminals have to be tin-plated in the solder area.

IEC 60 664 ≙ DIN VDE 0110 ; IEC 60 512-x ≙ DIN EN 60 512-x; IEC 60 130-9 ≙ DIN EN 60 130-9

C 091 A

Male cable connector, screw locking, straight

Cable diameter 4-6 mm

Cable diameter 6-8 mm

Cable diameter 4-6 mm

Cable diameter 4-6 mm

Description	Drawing	No. of cont.	Part Number solder termination: Contact plating silver	Part Number solder termination: Contact plating gold [2]	Part Number Crimp termination [1]
Male cable connector, for cable diameter 4-6 mm, termination: solder or crimp, contact plating: silver or gold.	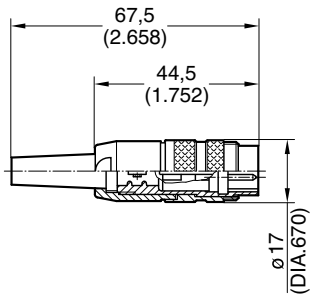	2	T 3200 001	T 3200 018	–
		3 [3]	T 3260 001	T 3260 018	T 3260 551
		4 [3]	T 3300 001	T 3300 018	T 3300 551
		5	T 3360 001	T 3360 018	T 3360 551
		5 S [3]	T 3360 010	T 3356 018 [4]	T 3356 551
		6 [3]	T 3400 001	T 3400 018	T 3400 551
		7	T 3475 001	T 3475 018	T 3475 551
		7 [3]	T 3484 001	T 3484 018 [4]	T 3484 551
		8 [3]	T 3504 001	T 3504 018	T 3504 551
		12	T 3635 001	T 3635 000	–
		14	T 3650 001	T 3650 000	–
Male cable connector, for cable diameter 6-8 mm, termination: solder or crimp, with clamping ring, contact plating: silver or gold.	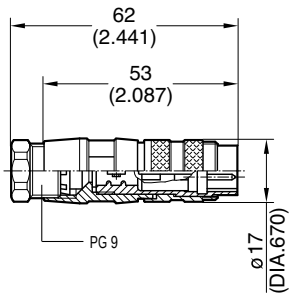	2	T 3200 002	T 3200 028	–
		3 [3]	T 3260 002	T 3260 028	T 3260 552
		4 [3]	T 3300 002	T 3300 028	T 3300 552
		5	T 3360 002	T 3360 028	T 3360 552
		5 S [3]	T 3360 020	T 3356 028 [4]	T 3356 552
		6 [3]	T 3400 002	T 3400 028	T 3400 552
		7	T 3475 002	T 3475 028	T 3475 552
		7 [3]	T 3484 002	T 3484 028	T 3484 552
		8 [3]	T 3504 002	T 3504 028	T 3504 552
		12	–	T 3635 002	–
		14	–	T 3650 002	–
Male cable connector, for cable diameter 4-6 mm, termination: solder or crimp, contact plating: silver or gold.	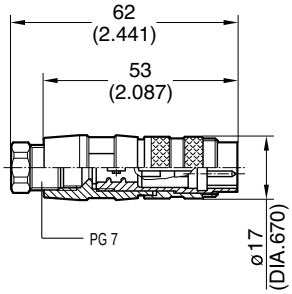	2	T 3200 004	T 3200 048	–
		3 [3]	T 3260 004	T 3260 048	T 3260 554
		4 [3]	T 3300 004	T 3300 048	T 3300 554 [4]
		5	T 3360 004	T 3360 048	T 3360 554 [4]
		5 S [3]	T 3356 004	T 3356 048 [4]	T 3356 554
		6 [3]	T 3400 004	T 3400 048	T 3400 554 [4]
		7	T 3475 004	T 3475 048	T 3475 554 [4]
		7 [3]	T 3484 004	T 3484 048	T 3484 554 [4]
		8 [3]	T 3504 004	T 3504 048	T 3504 554
		12	–	T 3635 004	–
		14	–	T 3650 004	–
Male cable connector, for cable diameter 4-6 mm, solder termination, plastic coated coupling ring, contact plating: silver.	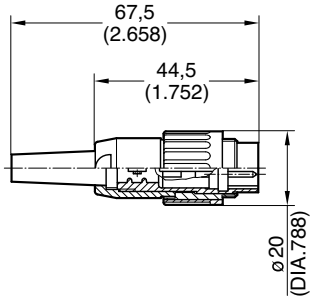	2	T 3200 013	–	–
		3 [3]	T 3260 013	–	–
		4 [3]	T 3300 013	–	–
		5	T 3360 013	–	–
		5 S [3]	T 3360 130	–	–
		6 [3]	T 3400 013	T 3400 038	–
		7	T 3475 013	T 3475 038	–
		7 [3]	T 3484 013 [4]	–	–
		8 [3]	T 3504 013	–	–
		12	–	–	–
		14	–	–	–

[1] Please order crimp contacts separately, see page 43 [2] see remark page 5 [3] Contact order for DIN EN 60 130-9 [4] Available upon request.

C 091 A

Male cable connector, screw locking, right-angled

Description	Drawing	No. of cont.	Part Number solder termination Contact plating silver	Part Number solder termination Contact plating gold [2]	Part Number Crimp termination [1]
Male cable connector, right-angled, for cable diameter 4-6 mm, termination: solder or crimp, contact plating: silver or gold.	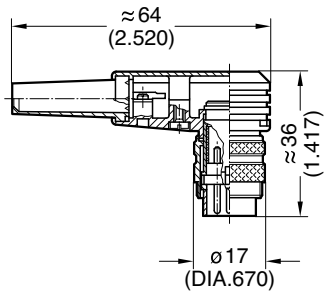	2	T 3200 005	–	–
		3 [3]	T 3260 005	T 3260 058 [4]	T 3260 055
		4 [3]	T 3300 005	T 3300 058 [4]	T 3300 055
		5	T 3360 005	T 3360 058	T 3360 055
		5 S [3]	T 3356 005	T 3356 058 [4]	T 3356 055
		6 [3]	T 3400 005	T 3400 058	T 3400 055
		7	T 3475 005	T 3475 058 [4]	T 3475 055
		7 [3]	T 3484 005	T 3484 058 [4]	T 3484 055
		8 [3]	T 3504 005	T 3504 058 [4]	T 3504 055
		12	T 3635 005	T 3635 058	–
		14	T 3650 005	T 3650 058	–

[1] Please order crimp contacts separately, see page 43 [2] See remark page 6 [3] Contact order for DIN EN 60 130-9 [4] Available upon request.

Assembly instructions [6]
male cable connector, cable diameter 4-6 mm

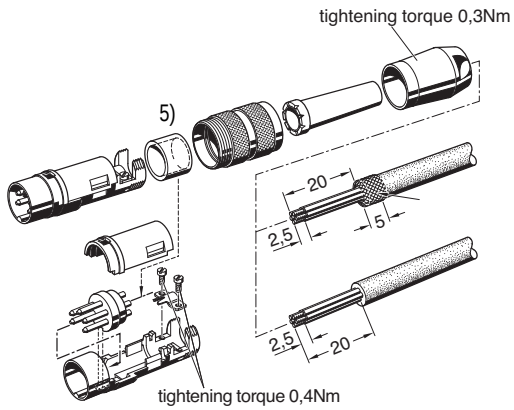

Assembly instructions [6]
male cable connector, cable diameter 4-6 mm or 6-8 mm

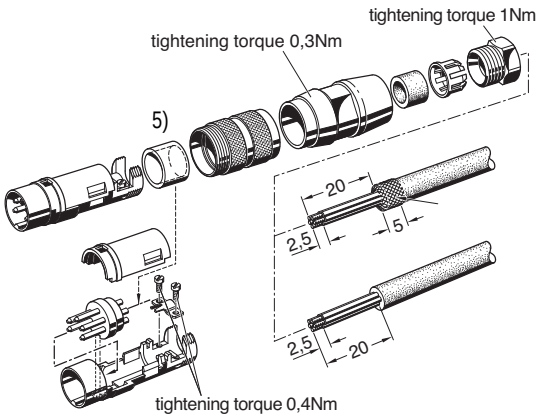

Assembly instructions [6]
male cable connector, right-angled, can be keyed to 8 angle positions

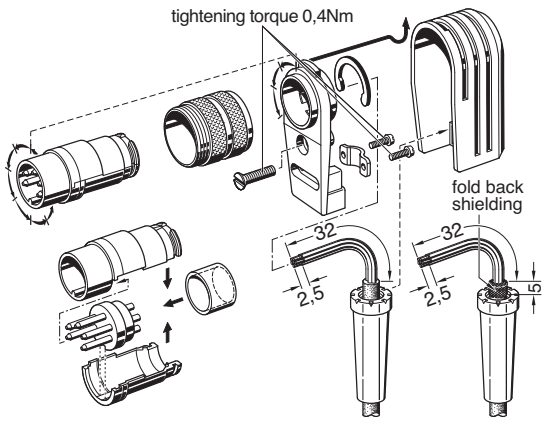

[5] Solder version only [6] Assembly Instructions please refer to page 46, conneting instructions

C 091 A

Female cable connector, screw locking, straight

Cable diameter 4-6 mm

Cable diameter 6-8 mm

Cable diameter 4-6 mm

Cable diameter 4-6 mm

Description	Drawing	No. of cont.	Part Number solder termination: Contact plating silver	Part Number solder termination: Contact plating gold [2]	Part Number Crimp termination[1]
Female cable connector, for cable diameter 4-6 mm, termination: solder or crimp, contact plating: silver or gold.	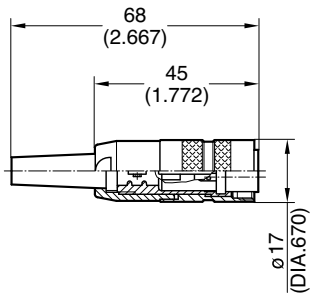	2	T 3201 001	T 3201 018	–
		3 [3]	T 3261 001	T 3261 018	T 3261 551
		4 [3]	T 3301 001	T 3301 018	T 3301 551
		5	T 3361 001	T 3361 018	T 3361 551
		5 S [3]	T 3361 010	T 3357 018 [4]	T 3357 551
		6 [3]	T 3401 001	T 3401 018	T 3401 551
		7	T 3476 001	T 3476 018	T 3476 551
		7 [3]	T 3485 001	T 3485 018	T 3485 551
		8 [3]	T 3505 001	T 3505 018	T 3505 551
		12	T 3636 001	T 3636 000	–
		14	T 3651 001	T 3651 000	–
Female cable connector, for cable diameter 6-8 mm, termination: solder or crimp, with clamping ring, contact plating: silver or gold.	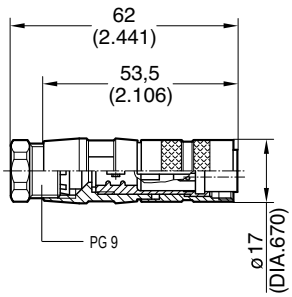	2	T 3201 002	T 3201 028	–
		3 [3]	T 3261 002	T 3261 028	T 3261 552 [4]
		4 [3]	T 3301 002	T 3301 028	T 3301 552 [4]
		5	T 3361 002	T 3361 028	T 3361 552
		5 S [3]	T 3361 020	T 3357 028 [4]	T 3357 552 [4]
		6 [3]	T 3401 002	T 3401 028	T 3401 552 [4]
		7	T 3476 002	T 3476 028	T 3476 552
		7 [3]	T 3485 002	T 3485 028	T 3485 552 [4]
		8 [3]	T 3505 002	T 3505 028	T 3505 552
		12	–	T 3636 002	–
		14	–	T 3651 002	–
Female cable connector, for cable diameter 4-6 mm, termination: solder or crimp, contact plating: silver or gold.	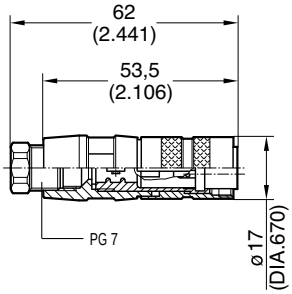	2	–	–	–
		3 [3]	T 3261 004	T 3261 048	T 3261 554 [4]
		4 [3]	T 3301 004	T 3301 048	T 3301 554
		5	T 3361 004	T 3361 048 [4]	T 3361 554 [4]
		5 S [3]	T 3357 004	T 3357 048 [4]	T 3357 554
		6 [3]	T 3401 004	T 3401 048	T 3401 554 [4]
		7	T 3476 004	T 3476 048	T 3476 554 [4]
		7 [3]	T 3485 004	T 3485 048	T 3485 554 [4]
		8 [3]	T 3505 004	T 3505 048	T 3505 554
		12	–	T 3636 004	–
		14	–	T 3651 004	–
Female cable connector, for cable diameter 4-6 mm, solder termination, plastic coated coupling ring, contact plating: silver.	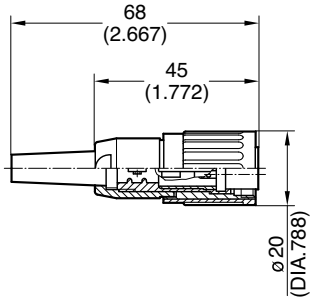	2	T 3201 013	–	–
		3 [3]	T 3261 013	–	–
		4 [3]	T 3301 013	–	–
		5	T 3361 013	–	–
		5 S [3]	T 3361 130	–	–
		6 [3]	T 3401 013	–	–
		7	T 3476 013	T 3476 038	–
		7 [3]	T 3485 013	–	–
		8 [3]	T 3505 013	–	–
		12	–	–	–
		14	–	–	–

[1] Please order crimp contacts separately, see page 43 [2] See remark page 6 [3] Contact order for DIN EN 60 130-9 [4] Available upon request.

C 091 A

Female cable connector, screw locking, right-angled

Description	Drawing	No. of cont.	Part Number solder termination: Contact plating silver	Part Number solder termination: Contact plating gold [2]	Part Number Crimp termination [1]
Female cable connector, right-angled, for cable diameter 4-6 mm, termination: solder or crimp, contact plating: silver or gold.	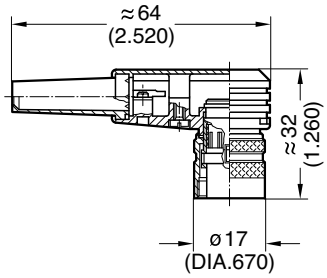	2	T 3201 005	–	–
		3 [3]	T 3261 005	T 3261 058 [4]	T 3261 055
		4 [3]	T 3301 005	T 3301 058 [4]	T 3301 055
		5	T 3361 005	T 3361 058 [4]	T 3361 055
		5 S [3]	T 3357 005	T 3357 058	T 3357 055
		6 [3]	T 3401 005	T 3401 058	T 3401 055
		7	T 3476 005	T 3476 058 [4]	T 3476 055
		7 [3]	T 3485 005	T 3485 058 [4]	T 3485 055
		8 [3]	T 3505 005	T 3505 058 [4]	T 3505 055
		12	T 3636 005	T 3636 058	–
		14	T 3651 005	T 3651 058 [4]	–

[1] Please order crimp contacts separately, see page 43 [2] See remark page 6 [3] Contact order for DIN EN 60 130-9 [4] Available upon request.

Assembly instructions [6]
female cable connector, cable diameter 4-6 mm

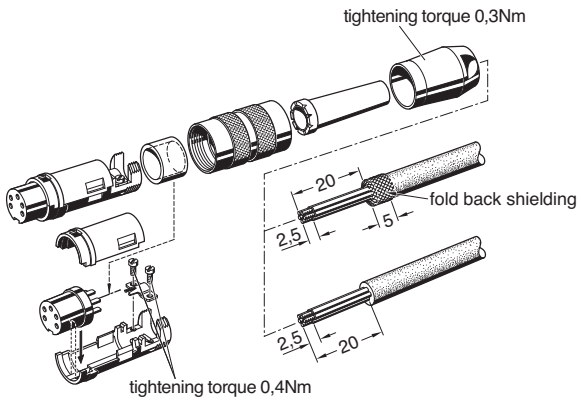

Assembly instructions [6]
female cable connector, cable diameter 4-6 mm or 6-8 mm

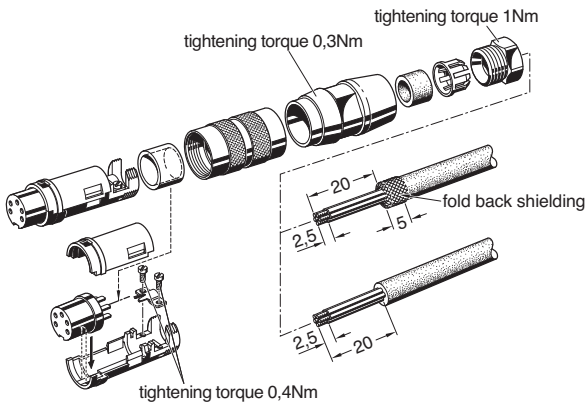

Assembly instructions [6]
female cable connector, right-angled, can be keyed to 8 angle positions

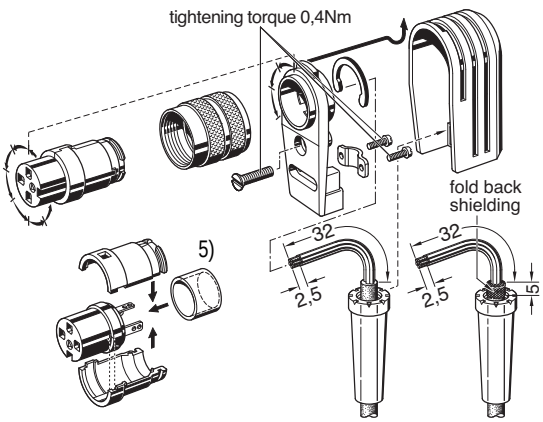

[5] Solder version only [6] Assembly instructions please refer to page 46, conneting instructions

C 091 A

Female receptacle, screw locking, front mounting

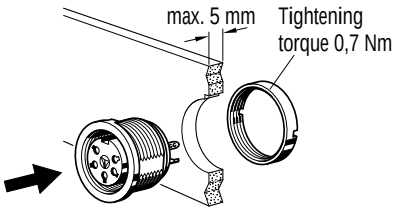

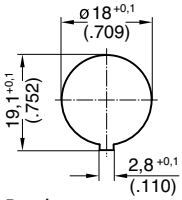

Panel cutout

Description	Drawing	No. of cont.	Part Number solder termination: Contact plating silver, ring nut	Part Number solder termination: Contact plating silver, hex nut	Part Number solder termination: Contact plating gold [2] ring nut	Part No. Crimp termination [1] ring nut
Female receptacle, termination: solder or crimp, panel mounting with ring or hex nut, contact plating: silver or gold.	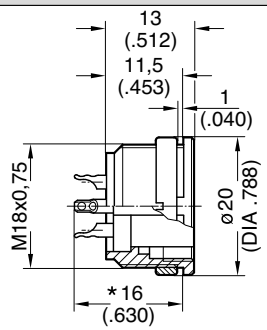 *Measure 12- and 14-pol.=14±0,3	2	T 3203 000	T 3203 009	T 3203 018	–
		3 [3]	T 3263 000	T 3263 009	T 3263 018	T 3263 550
		4 [3]	T 3303 000	T 3303 009	T 3303 018	T 3303 550
		5	T 3363 000	T 3363 009	T 3363 018	T 3363 550
		5 S [3]	T 3363 010	T 3359 009	T 3359 018	T 3359 550
		6 [3]	T 3403 000	T 3403 009	T 3403 018	T 3403 550
		7	T 3478 000	T 3478 009	T 3478 018	T 3478 550
		7 [3]	T 3487 000	T 3487 009	T 3487 018 [4]	T 3487 550
		8 [3]	T 3507 000	T 3507 009	T 3507 018	T 3507 550
		12	T 3638 000	T 3638 009	T 3638 004	–
		14	T 3653 000	T 3653 009	T 3653 004	–
Female receptacle, termination: straight dip solder, pin length 15 mm from flange, panel mounting with ring nut, contact plating: silver or gold, solder area: tin plated.	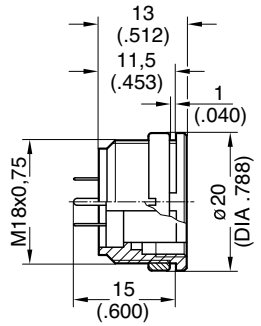	2	–	–	–	–
		3 [3]	T 3263 300	–	–	–
		4 [3]	T 3303 300	–	–	–
		5	T 3363 300	–	–	–
		5 S [3]	T 3359 300	–	–	–
		6 [3]	T 3403 300	–	–	–
		7	T 3478 300	–	–	–
		7 [3]	T 3487 300	–	–	–
		8 [3]	T 3507 300	–	–	–
		12	–	–	T 3638 304	–
		14	–	–	T 3653 304	–
Female receptacle, termination: straight dip solder, pin length 19 mm from flange, panel mounting with ring nut, contact plating: silver, solder area: tin plated.	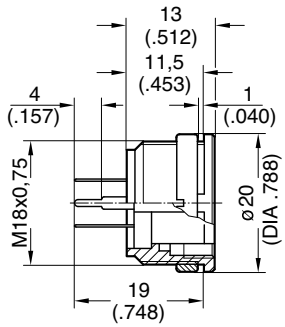	2	–	–	–	–
		3 [3]	T 3263 320	–	–	–
		4 [3]	T 3303 320	–	–	–
		5	T 3363 320	–	–	–
		5 S [3]	T 3359 320	–	–	–
		6 [3]	T 3403 320	–	–	–
		7	T 3478 320	–	–	–
		7 [3]	T 3487 320	–	–	–
		8 [3]	T 3507 320	–	–	–
		12	–	–	–	–
		14	–	–	–	–
Female receptacle, termination: straight dip solder, pin length 24 mm from flange, panel mounting with ring nut, contact plating: silver, solder area: tin plated.	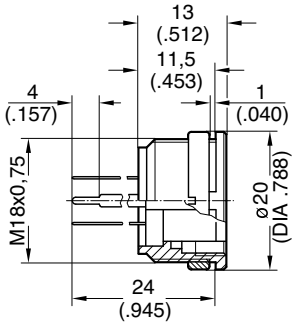	2	–	–	–	–
		3 [3]	T 3263 330	–	–	–
		4 [3]	T 3303 330	–	–	–
		5	T 3363 330	–	–	–
		5 S [3]	T 3359 330	–	–	–
		6 [3]	T 3403 330	–	–	–
		7	T 3478 330	–	–	–
		7 [3]	T 3487 330	–	–	–
		8 [3]	T 3507 330	–	–	–
		12	–	–	–	–
		14	–	–	–	–

[1] Please order crimp contacts separately, see page 43 [2] See remark page 6 [3] Contact order for DIN EN 60 130-9 [4] Available upon request.

C 091 A

Female receptacle, screw locking, rear mounting

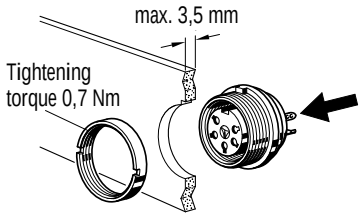

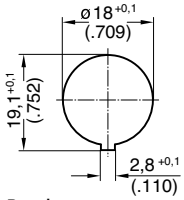

Panel cutout

Description	Drawing	No. of cont.	Part Number solder termination – Contact plating silver – ring nut	Part Number solder termination – Contact plating silver – hex nut	Part Number solder termination – Contact plating gold [2] – ring nut	Part No. Crimp termination [1] – ring nut
Female receptacle, termination: solder or crimp, panel mounting with ring or hex nut, contact plating: silver or gold.	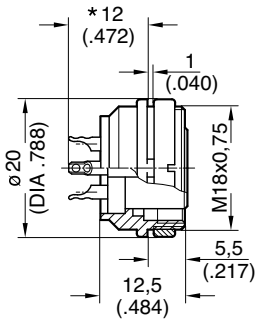 *Measure 12- and 14-pol.=10±0,3	2	T 3203 100	T 3203 109	–	–
		3 [3]	T 3263 100	T 3263 109 [4]	T 3263 118 [4]	T 3263 150 [4]
		4 [3]	T 3303 100	T 3303 109 [4]	T 3303 118	T 3303 150
		5	T 3363 100	T 3363 109	T 3363 118 [4]	T 3363 150
		5 S [3]	T 3359 100	T 3359 109	T 3359 118 [4]	T 3359 150
		6 [3]	T 3403 100	T 3403 109	T 3403 118 [4]	T 3403 150
		7	T 3478 100	T 3478 109 [4]	T 3478 118	T 3478 150
		7 [3]	T 3487 100	T 3487 109 [4]	T 3487 118	T 3487 150 [4]
		8 [3]	T 3507 100	T 3507 109	T 3507 118	T 3507 150
		12	T 3638 100	T 3638 109 [4]	T 3638 118	–
		14	T 3653 100	T 3653 109 [4]	T 3653 118	–
Female receptacle, termination: straight dip solder, pin length 10.5 mm from flange, panel mounting with ring nut, contact plating: silver or gold, solder area: tin plated.	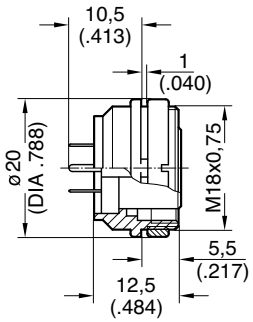	2	T 3203 400	–	–	–
		3 [3]	T 3263 400	–	–	–
		4 [3]	T 3303 400	–	–	–
		5	T 3363 400	–	T 3363 404	–
		5 S [3]	T 3359 400	–	–	–
		6 [3]	T 3403 400	–	–	–
		7	T 3478 400	–	T 3478 404	–
		7 [3]	T 3487 400	–	–	–
		8 [3]	T 3507 400	–	T 3507 404	–
		12	–	–	T 3638 404	–
		14	–	–	T 3653 404	–
Female receptacle, termination: straight dip solder, pin length 14.5 mm from flange, panel mounting with ring nut, contact plating: silver, solder area: tin plated.	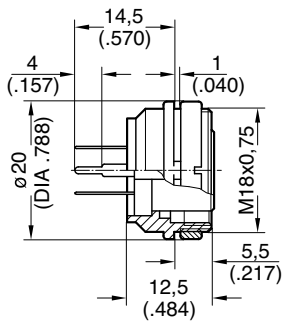	2	–	–	–	–
		3 [3]	T 3263 420	–	–	–
		4 [3]	T 3303 420	–	–	–
		5	T 3363 420	–	–	–
		5 S [3]	T 3359 420	–	–	–
		6 [3]	T 3403 420	–	–	–
		7	T 3478 420	–	–	–
		7 [3]	T 3487 420	–	–	–
		8 [3]	T 3507 420	–	–	–
		12	–	–	–	–
		14	–	–	–	–
Female receptacle, termination: straight dip solder, pin length 19.5 mm from flange, panel mounting with ring nut, contact plating: silver, solder area: tin plated.	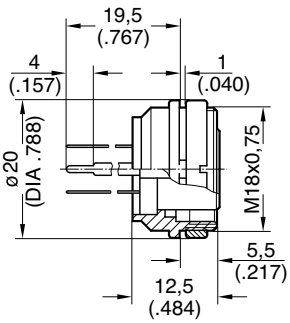	2	–	–	–	–
		3 [3]	T 3263 430	–	T 3263 434	–
		4 [3]	T 3303 430	–	T 3303 434	–
		5	T 3363 430	–	T 3363 434	–
		5 S [3]	T 3359 430	–	–	–
		6 [3]	T 3403 430	–	T 3403 434	–
		7	T 3478 430	–	T 3478 434	–
		7 [3]	T 3487 430	–	–	–
		8 [3]	T 3507 430	–	–	–
		12	–	–	–	–
		14	–	–		–

[1] Please order crimp contacts separately, see page 43 [2] See remark page 6 [3] Contact order for DIN EN 60 130-9 [4] Available upon request.

C 091 A

Female receptacle, screw locking, right-angled

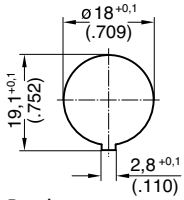

Panel cutout

Description	Drawing	No. of cont.	Part Number solder termination: Contact plating silver	Part Number solder termination: Contact plating gold [2]	Part Number Crimp termination [1]
Female receptacle, right-angled, PCB mounting, contact plating: gold, solder area: tin plated.	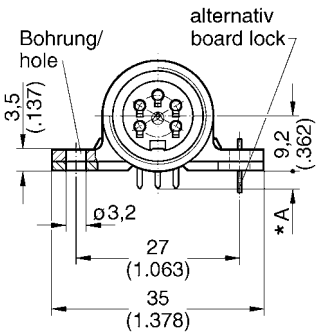	2	–	–	–
		3 [3]	–	–	–
		4 [3]	–	–	–
		5	–	T 3363 ... [3]	–
		5 S [3]	–	–	–
		6 [3]	–	T 3403 ... [3]	–
		7	–	–	–
		7 [3]	–	–	–
		8 [3]	–	–	–
		12	–	–	–
		14	–	–	–

[3] *A	Best.-Nr.
3	...218
8,3	...228

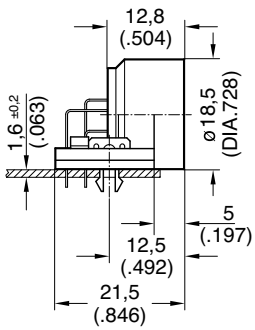

PCB-layout
components side

5 Pol.

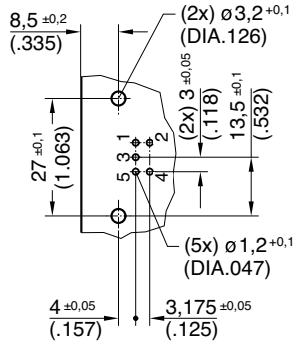

6 Pol.

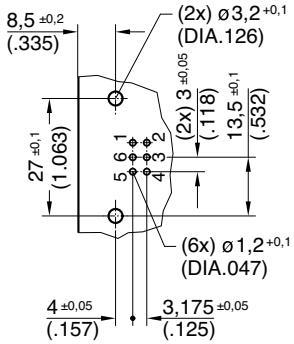

Description	Drawing	No. of cont.	Part Number solder termination: Contact plating silver	Part Number solder termination: Contact plating gold [2]	Part Number Crimp termination [1]
Female receptacle, right-angled, rear mounting, panel mounting with ring nut, contact plating: gold, solder area: tin plated.	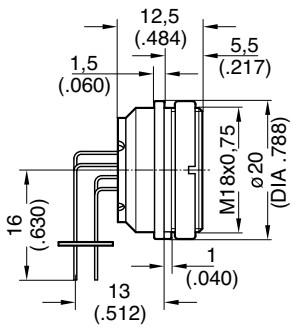	2	–	–	–
		3 [3]	–	–	–
		4 [3]	–	–	–
		5	–	T 3363 902	–
		5 S [3]	–	–	–
		6 [3]	–	T 3403 902	–
		7	–	–	–
		7 [3]	–	–	–
		8 [3]	–	–	–
		12	–	–	–
		14	–	–	–

PCB-layout
components side

5 Pol.

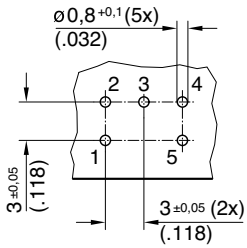

6 Pol.

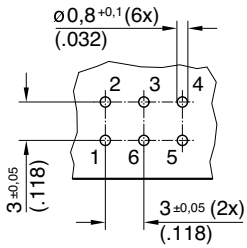

[1] Please order crimp contacts separately, see page 43 [2] see remark page 6 [3] Contact order for DIN EN 60 130-9

C 091 A

Female receptacle, screw locking, right-angled

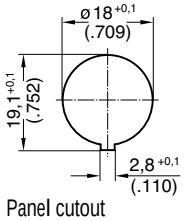

Panel cutout

Description	Drawing	No. of cont.	Part Number solder termination: Contact plating silver	Part Number solder termination: Contact plating gold [2]	Part Number Crimp termination [1]
Female receptacle, right-angled, PCB mounting, contact plating: silver.	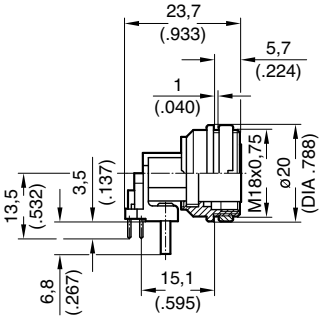	2	–	–	–
		3 [3]	T 3263 900	–	–
		4 [3]	–	–	–
		5	–	–	–
		5 S [3]	T 3359 900	–	–
		6 [3]	–	–	–
		7	–	–	–
		7 [3]	T 3487 900	–	–
		8 [3]	T 3507 900	–	–
		12	–	–	–
		14	–	–	–

PCB layout
components side

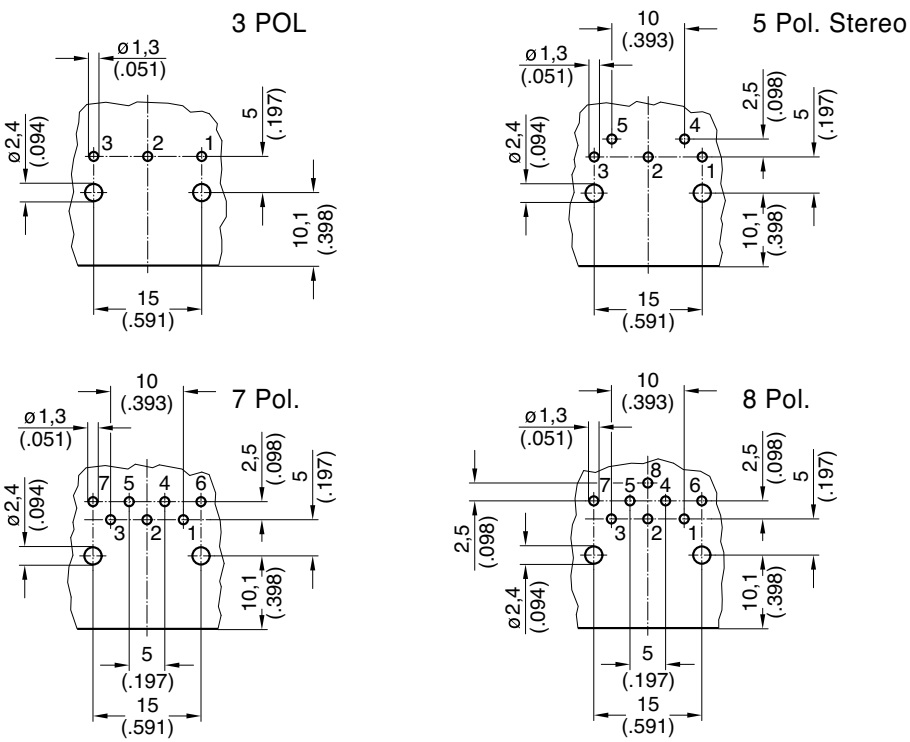

[1] Please order crimp contacts separately, see page 43 [2] see remark page 6 [3] Contact order for DIN EN 60 130-9

C 091 A

Male receptacle, screw locking, front mounting

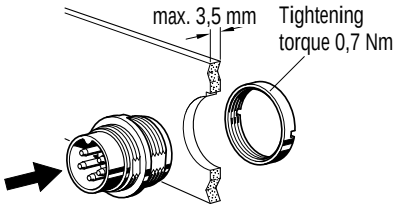

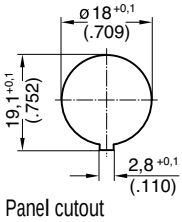

Description	Drawing	No. of cont.	Part Number solder termination Contact plating silver ring nut	hex nut	Contact plating gold [2] ring nut	Part No. Crimp termination [1] ring nut
Male receptacle, termination: solder or crimp, panel mounting with ring or hex nut, contact plating: silver or gold.	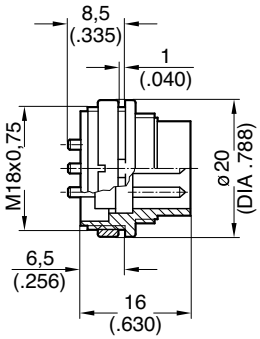	2	T 3202 000	T 3202 009	T 3202 018	–
		3 [3]	T 3262 000	T 3262 009	T 3262 018	T 3262 550
		4 [3]	T 3302 000	T 3302 009	T 3302 018	T 3302 550
		5	T 3362 000	T 3362 009	T 3362 018	T 3362 550
		5 S [3]	T 3362 010	T 3358 009	T 3358 018	T 3358 550 [4]
		6 [3]	T 3402 000	T 3402 009	T 3402 018	T 3402 550
		7	T 3477 000	T 3477 009	T 3477 018	T 3477 550
		7 [3]	T 3486 000	T 3486 009	T 3486 018	T 3486 550 [4]
		8 [3]	T 3506 000	T 3506 009	T 3506 018	T 3506 550 [4]
		12	T 3637 001	T 3637 009	T 3637 000	–
		14	T 3652 001	T 3652 009	T 3652 000	–
Male receptacle, termination: straight dip solder, pin length 10.5 mm from flange, panel mounting with ring nut, contact plating: silver or gold.	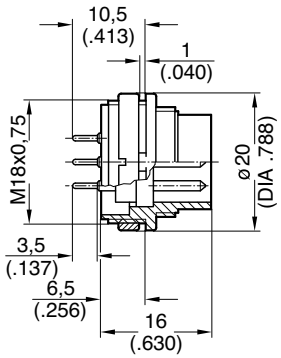	2	–	–	–	–
		3 [3]	T 3262 300	–	–	–
		4 [3]	T 3302 300 [4]	–	–	–
		5	T 3362 300 [4]	–	–	–
		5 S [3]	T 3358 300 [4]	–	–	–
		6 [3]	T 3402 300 [4]	–	–	–
		7	T 3477 300 [4]	–	–	–
		7 [3]	T 3486 300 [4]	–	–	–
		8 [3]	T 3506 300	–	–	–
		12	–	–	T 3637 304 [4]	–
		14	–	–	T 3652 304 [4]	–

[1] Please order crimp contacts separately, see page 43 [2] see remark page 6 [3] Contact order for DIN EN 60 130-9 [4] Available upon request.

C 091 A

Male receptacle, screw locking, rear mounting

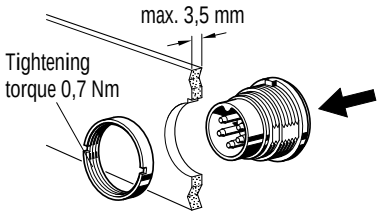

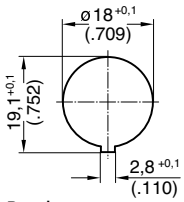

Panel cutout

Description	Drawing	No. of cont.	Part Number solder termination Contact plating silver ring nut	hex nut	Contact plating gold [2] ring nut	Part No. Crimp termination [1] ring nut
Male receptacle, termination: solder or crimp, panel mounting with ring nut, contact plating: silver or gold.	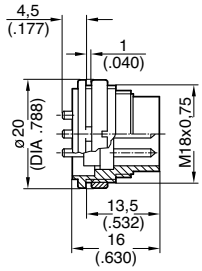	2	T 3202 100	–	–	–
		3 [3]	T 3262 100	–	–	T 3262 150 [4]
		4 [3]	T 3302 100	–	–	T 3302 150 [4]
		5	T 3362 100	–	–	T 3362 150
		5 S [3]	T 3358 100	–	–	T 3358 150 [4]
		6 [3]	T 3402 100	–	–	T 3402 150 [4]
		7	T 3477 100	–	–	T 3477 150 [4]
		7 [3]	T 3486 100	–	–	T 3486 150 [4]
		8 [3]	T 3506 100	–	–	T 3506 150 [4]
		12	–	–	T 3637 100	–
		14	–	–	T 3652 100	–
Male receptacle, termination: straight dip solder, pin length 10,5 mm from flange, panel mounting with ring nut, contact plating: silver or gold.	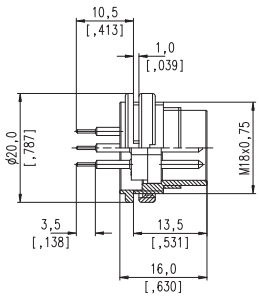	3 [3]	T 3262 400	–	–	–
		4 [3]	T 3302 400	–	–	–
		5	T 3362 400	–	–	–
		5 S [3]	T 3358 400	–	–	–
		6 [3]	T 3402 400	–	–	–
		7	T 3477 400	–	–	–
		7 [3]	T 3486 400	–	–	–
		8 [3]	T 3506 400	–	–	–
		12	–	–	T 3637 404	–
		14	–	–	T 3652 404 [4]	–
Male receptacle, termination: straight dip solder, pin length 14,5 mm from flange, panel mounting with ring nut, contact plating: silver or gold.	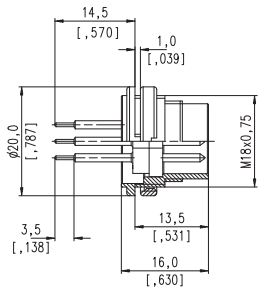	3 [3]	T 3262 420 [4]	–	–	–
		4 [3]	T 3302 420 [4]	–	–	–
		5	T 3362 420 [4]	–	–	–
		5 S [3]	T 3358 420 [4]	–	–	–
		6 [3]	T 3402 420	–	–	–
		7	T 3477 420 [4]	–	–	–
		7 [3]	T 3486 420	–	–	–
		8 [3]	T 3506 420	–	–	–
Male receptacle, termination: straight dip solder, pin length 19,5 mm from flange, panel mounting with ring nut, contact plating: silver or gold.	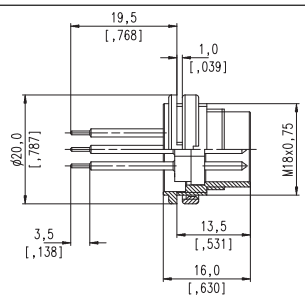	3 [3]	T 3262 430	–	–	–
		4 [3]	T 3302 430 [4]	–	–	–
		5	T 3362 430 [4]	–	–	–
		5 S [3]	T 3358 430 [4]	–	–	–
		6 [3]	T 3402 430	–	–	–
		7	T 3477 430	–	–	–
		7 [3]	T 3486 430 [4]	–	–	–
		8 [3]	T 3506 430 [4]	–	–	–

[1] Please order crimp contacts separately, see page 43 [2] see remark page 6 [3] Contact order for DIN EN 60 130-9 [4] Available upon request.

PCB-layout

Male Receptacles

These hole patterns on PCB are valid for male receptacles with **straight dip solder pins.**
Components side of circuit board

3 POL*

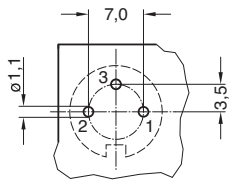

4 POL*

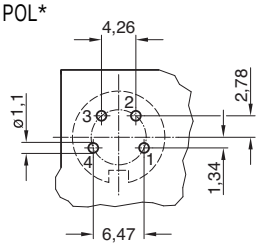

5 POL

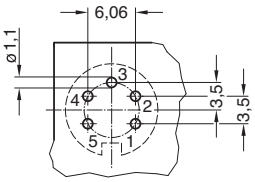

5 POL S*

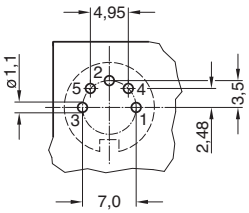

6 POL*

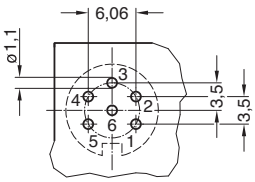

7 POL

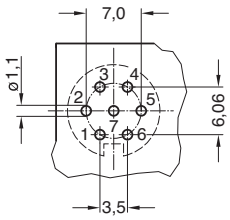

7 POL*

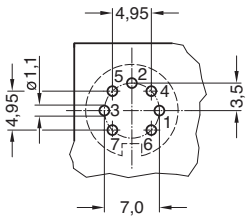

8 POL*

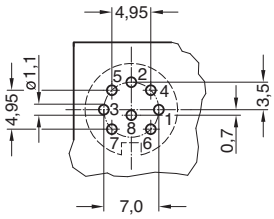

12 POL

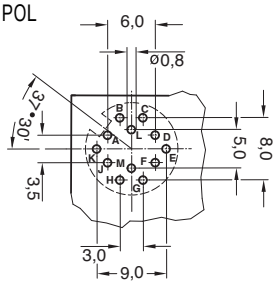

14 POL

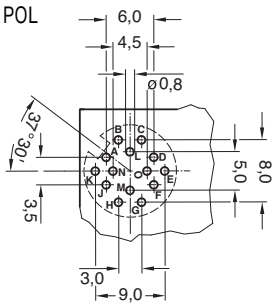

Female Receptacles

These hole patterns on PCB are valid for female receptacles with **straight dip solder pins.**
Components side of circuit board

3 POL*

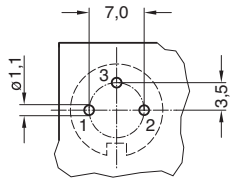

4 POL*

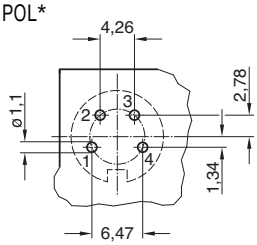

5 POL

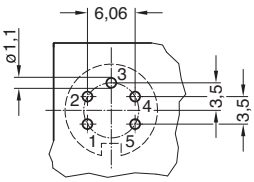

5 POL S*

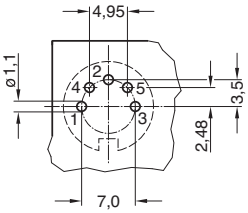

6 POL*

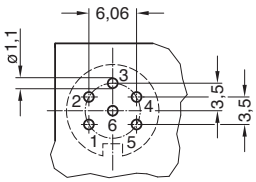

7 POL

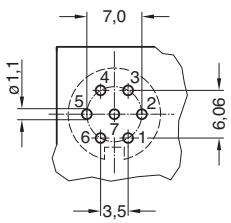

7 POL*

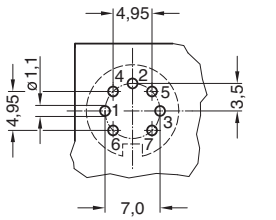

8 POL*

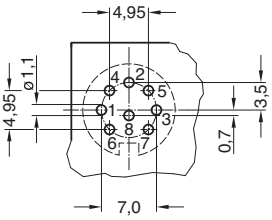

12 POL

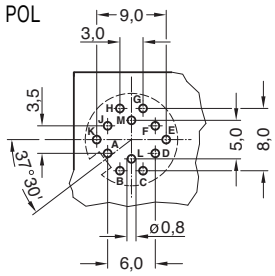

14 POL

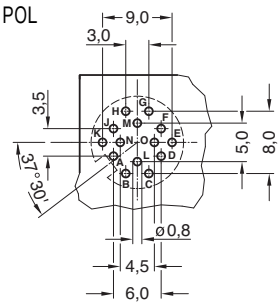

* Contact order for DIN EN 130-9

C 091 B

Main Features

- Plastic locking ring; bayonet locking
- Number of contacts: 3 – 8, 12 and 14 contacts
- Internal strain relief
- Good shielding effectiveness when mated and locked
- Male and female cable connectors
  - Straight or right angled
  - Solder connection: 3 – 8, 12 and 14 contacts
  - Crimp connection: 3 – 8 contacts
  - With cable sleeve for max. cable diameter 6 mm, or
  - With cable glands for cable diameter 4 – 6 mm or 6 – 8 mm
- Male and female receptacles
  - Panel mount types for front or rear panel mounting
  - Pcb mount types
  - Solder connection: 3 – 8, 12 and 14 contacts
  - Crimp connection: 3 – 8 contacts
- Coloured back shells optional
- UL registered under file number E 63 093 UL

[1]

UNDERWRITERS LABORATORIES INC.

[1] In general approvals refer to representative versions of the connector series.
Test report upon request.

C 091 B

Characteristics

General Characteristics	Standard	Characteristics									
Number of contacts View on termination side of contact insert		3	4	5	5 Stereo	6	7	7	8	12	14
Contact arrangement acc. to DIN Contact arrangement acc. to IEC		41 524 60130-9	– 60130-9	– –	41 524 60130-9	45 322 60130-9	– –	45 329 60130-9	45 326 60130-9	– –	– –
Electrical Characteristics											
Rated voltage	IEC 60664-1	300 V ≈			100 V ≈	300 V ≈		150 V ≈			
Rated voltage	UL 1977	250 V								60 V	
Rated impulse withstand voltage	IEC 60664-1	1500 V			1200 V	1500 V		1200 V			
Pollution degree	IEC 60664-1	1									
Installation category	IEC 60664-1	I									
Insulation group	IEC 60664-1	II, 400 ≤ CTI < 600									
Current rating	IEC 60512-5-2 Test 5 b UL 1977	5 A / + 40 °C / + 104 °F please refer also to current derating curves page 45								3 A / + 40 °C / + 104 °F	
Insulation resistance	IEC 60512-3-1 Test 3 a	> 10^{10} Ω									
Contact resistance	IEC 60512-2-1 Test 2 a	< 5 m Ω									
Climatic Characteristics											
Climatic category	IEC 60668-1	40 / 100 / 56									
Temperature range	IEC 60668-1	- 40 °C ... + 100 °C / - 40 °F ... + 212 °F									
Mechanical Characteristics											
IP-degree	IEC 60529	IP 40									
Insertion and withdrawal forces	IEC 60512-13-2 Test 13 b	25 N 90.oz	30 N 110.oz	35 N 125.oz		50 N 180.oz	55 N 200.oz		60 N 220.oz	50 N 180.oz	
Mechanical operation	IEC 60512 Test 9 a	Silver ≥ 500 mating cycles Gold ≥ 1000 mating cycles									
Materials											
Housing material		die cast, nickel plated									
Dielectric material		thermoplastic									
Contact plating		silver plated / gold plated *									
Further Characteristics											
Termination technique		solder, crimp								solder	
Wire gauge		solder: ≤ 0,5 mm² / 20 AWG crimp: 2 - 6 pol (excluding 5S): 0,09 - 1,00 mm² / 28 - 18 AWG crimp: 5S, 7, 7S and 8-pol.: 0,09 - 0,75 mm² / 28 - 20 AWG								≤ 0,25 mm²/24 AWG	
Flammability		UL 94 V0									
Locking system		bayonet									

Caution: Do not connect or disconnect under load. Metal housing parts shall be securely incorporated to protected ground.

*** Remark for gold plated contacts:** In order to avoid brittle inter-metallic connections, gold-plated terminals have to be tin-plated in the solder area.

IEC 60 664 ≙ DIN VDE 0110 ; IEC 60 512-x ≙ DIN EN 60 512-x

C 091 B

Male cable connector, bayonet locking inside

Cable diameter 4-6 mm

Cable diameter 6-8 mm

Cable diameter 4-6 mm

Right-angled

Description	Drawing	No. of cont.	Part Number solder termination: Contact plating silver	Part Number solder termination: Contact plating gold [2]	Part Number Crimp termination [1]
Male cable connector, for cable diameter 4-6 mm, termination: solder or crimp, contact plating: silver or gold, cable sleeve: black.	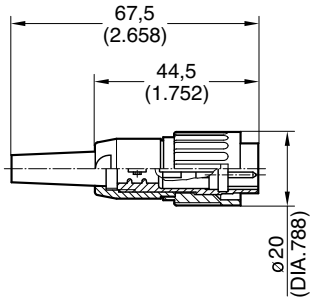	3 [3]	T 3274 501	T 3274 518	T 3274 551
		4 [3]	T 3324 501	T 3324 518	T 3324 551
		5	T 3374 501	T 3374 518	T 3374 551
		5 S [3]	T 3394 501	T 3394 518	T 3394 551
		6 [3]	T 3424 501	T 3424 518	T 3424 551
		7	T 3434 501	T 3434 518 [4]	T 3434 551
		7 [3]	T 3444 501	T 3444 518 [4]	T 3444 551 [4]
		8 [3]	T 3524 501	T 3524 518 [4]	T 3524 551
		12	T 3624 501	T 3624 518 [4]	–
		14	T 3644 501	T 3644 518	–
Male cable connector, for cable diameter 6-8 mm, termination: solder or crimp with clamping ring, contact plating: silver or gold.	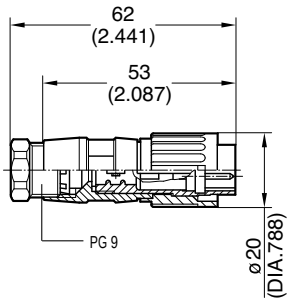	3 [3]	T 3274 502	T 3274 528 [4]	T 3274 552
		4 [3]	T 3324 502	T 3324 528 [4]	T 3324 552
		5	T 3374 502	T 3374 528 [4]	T 3374 552
		5 S [3]	T 3394 502	T 3394 528 [4]	T 3394 552 [4]
		6 [3]	T 3424 502	T 3424 528 [4]	T 3424 552
		7	T 3434 502	T 3434 528 [4]	T 3434 552
		7 [3]	T 3444 502 [4]	T 3444 528 [4]	T 3444 552 [4]
		8 [3]	T 3524 502	T 3524 528	T 3524 552 [4]
		12	T 3624 502	T 3624 528 [4]	–
		14	T 3644 502	T 3644 528 [4]	–
Male cable connector, for cable diameter 4-6 mm, termination: solder or crimp, contact plating: silver or gold.	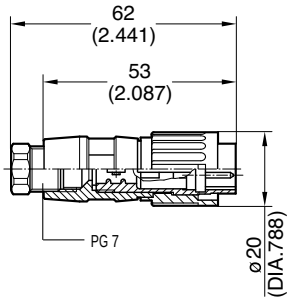	3 [3]	T 3274 504 [4]	T 3274 548 [4]	T 3274 554 [4]
		4 [3]	T 3324 504 [4]	T 3324 548 [4]	T 3324 554 [4]
		5	T 3374 504	T 3374 548 [4]	T 3374 554 [4]
		5 S [3]	T 3394 504 [4]	T 3394 548 [4]	T 3394 554 [4]
		6 [3]	T 3424 504 [4]	T 3424 548 [4]	T 3424 554 [4]
		7	T 3434 504 [4]	T 3434 548 [4]	T 3434 554 [4]
		7 [3]	T 3444 504 [4]	T 3444 548 [4]	T 3444 554 [4]
		8 [3]	T 3524 504 [4]	T 3524 548	T 3524 554 [4]
		12	T 3624 504 [4]	T 3624 548 [4]	–
		14	T 3644 504 [4]	T 3644 548 [4]	–
Male cable connector, right-angled, for cable diameter 4-6 mm, termination: solder or crimp, contact plating: silver or gold, cable sleeve: black.	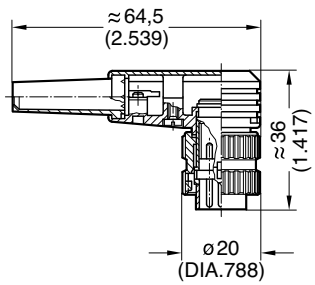	3 [3]	T 3274 005	T 3274 058	T 3274 055 [4]
		4 [3]	T 3324 005	T 3324 058	T 3324 055 [4]
		5	T 3374 005	T 3374 058	T 3374 055
		5 S [3]	T 3394 005	T 3394 058 [4]	T 3394 055 [4]
		6 [3]	T 3424 005	T 3424 058 [4]	T 3424 055
		7	T 3434 005	T 3434 058 [4]	T 3434 055 [4]
		7 [3]	T 3444 005 [4]	T 3444 058 [4]	T 3444 055 [4]
		8 [3]		T 3524 058 [4]	T 3524 055 [4]
		12	T 3624 005	T 3624 058 [4]	–
		14	T 3644 005	T 3644 058 [4]	–

[1] Please order crimp contacts separately, see page 43 [2] see remark page 20 [3] Contact order for DIN EN 60 130-9 [4] Available upon request.

C 091 B

Male cable connector, bayonet locking inside, assembly instructions

Male cable connector, cable diameter 4-6 mm [6]

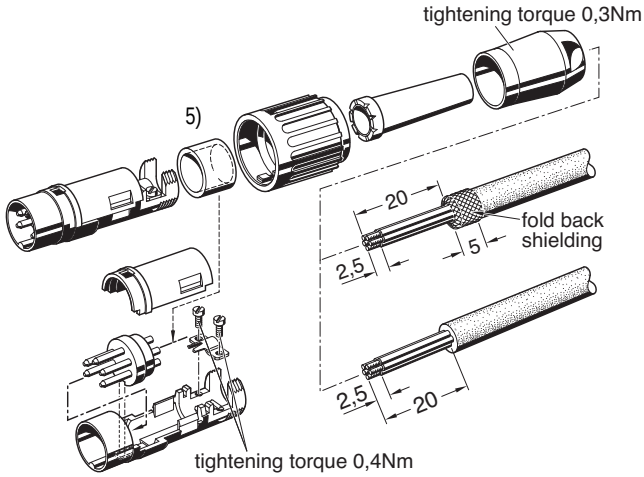

Male cable connector, cable diameter 4-6 mm or 6-8 mm [6]

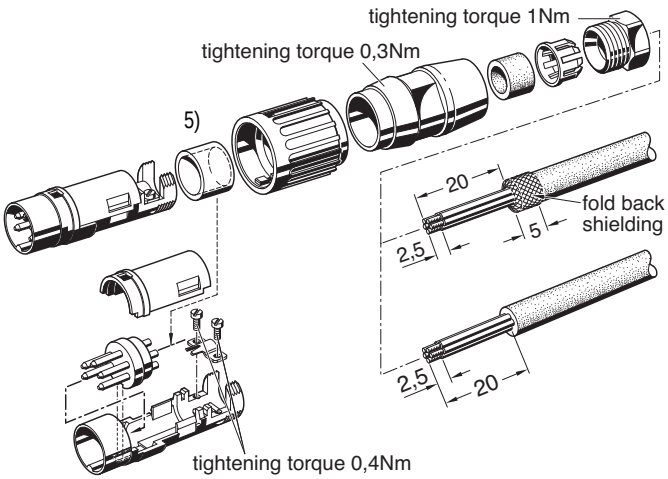

Male cable connector, right-angled, can be keyed in 8 angle positions[6]

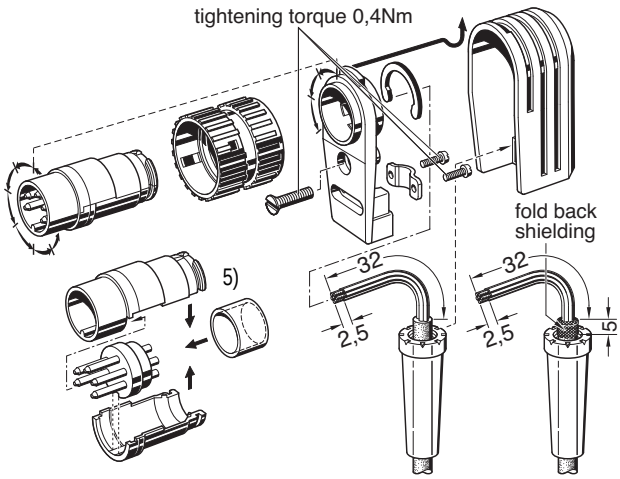

[5] Solder version only [6] Assembly instructions please refer to page 46, conneting instructions

C 091 B

Male cable connector, bayonet locking outside

Cable diameter 4-6 mm

Cable diameter 6-8 mm

Cable diameter 4-6 mm

Description	Drawing	No. of cont.	Part Number solder termination: Contact plating silver	Part Number solder termination: Contact plating gold [2]	Part Number Crimp termination [1]
Male cable connector, for cable diameter 4-6 mm, termination: solder or crimp, contact plating: silver or gold, cable sleeve: black.	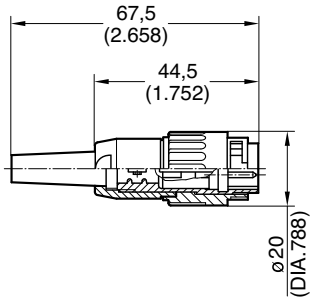	3 [3]	T 3279 501	T 3279 518 [4]	T 3279 551
		4 [3]	T 3329 501	T 3329 518 [4]	T 3329 551
		5	T 3379 501	T 3379 518 [4]	T 3379 551
		5 S [3]	T 3399 501	T 3399 518 [4]	T 3399 551 [4]
		6 [3]	T 3429 501	T 3429 518 [4]	T 3429 551
		7	T 3439 501	T 3439 518 [4]	T 3439 551
		7 [3]	T 3449 501 [4]	T 3449 518 [4]	T 3449 551 [4]
		8 [3]	T 3529 501 [4]	T 3529 518 [4]	T 3529 551 [4]
		12	T 3629 501 [4]	T 3629 518 [4]	–
		14	T 3649 501	T 3649 518 [4]	–
Male cable connector, for cable diameter 6-8 mm, termination: solder or crimp with clamping ring, contact plating: silver or gold.	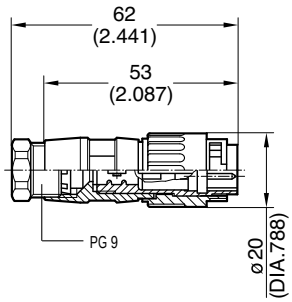	3 [3]	T 3279 502	T 3279 528 [4]	T 3279 552
		4 [3]	T 3329 502	T 3329 528 [4]	T 3329 552
		5	T 3379 502	T 3379 528 [4]	T 3379 552
		5 S [3]	T 3399 502	T 3399 528 [4]	T 3399 552 [4]
		6 [3]	T 3429 502	T 3429 528 [4]	T 3429 552
		7	T 3439 502	T 3439 528 [4]	T 3439 552
		7 [3]	T 3449 502 [4]	T 3449 528 [4]	T 3449 552 [4]
		8 [3]	T 3529 502	T 3529 528 [4]	T 3529 552 [4]
		12	T 3629 502 [4]	T 3629 528 [4]	–
		14	T 3649 502	T 3649 528 [4]	–
Male cable connector, for cable diameter 4-6 mm, termination: solder or crimp, contact plating: silver or gold.	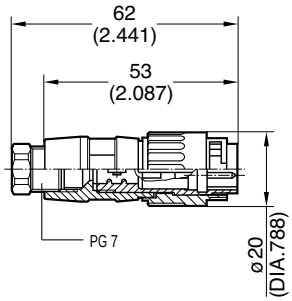	3 [3]	T 3279 504	T 3279 548 [4]	T 3279 554 [4]
		4 [3]	T 3329 504 [4]	T 3329 548 [4]	T 3329 554 [4]
		5	T 3379 504 [4]	T 3379 548 [4]	T 3379 554 [4]
		5 S [3]	T 3399 504 [4]	T 3399 548 [4]	T 3399 554 [4]
		6 [3]	T 3429 504 [4]	T 3429 548 [4]	T 3429 554 [4]
		7	T 3439 504 [4]	T 3439 548 [4]	T 3439 554 [4]
		7 [3]	T 3449 504 [4]	T 3449 548 [4]	T 3449 554 [4]
		8 [3]	T 3529 504 [4]	T 3529 548 [4]	T 3529 554 [4]
		12	T 3629 504 [4]	T 3629 548 [4]	–
		14	T 3649 504 [4]	T 3649 548 [4]	–

[1] Please order crimp contacts separately, see page 43 [2] see remark page 20 [3] Contact order for DIN EN 60 130-9 [4] Available upon request.

C 091 B

Male cable connector, bayonet locking outside, assembly instructions

Male cable connector, cable diameter 4-6 mm [6]

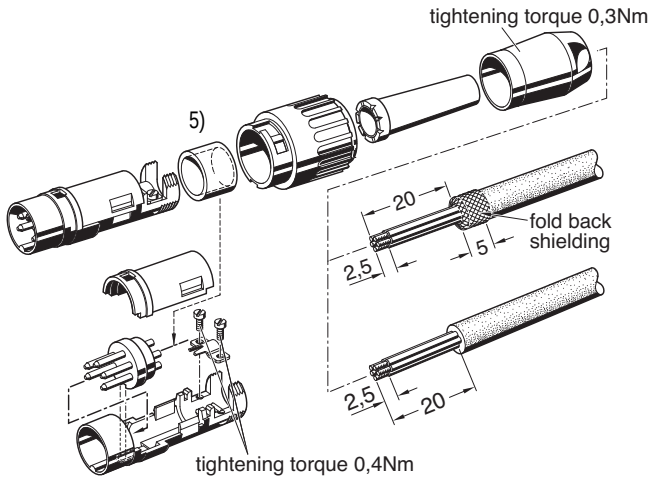

Male cable connector, cable diameter 4-6 mm or 6-8 mm [6]

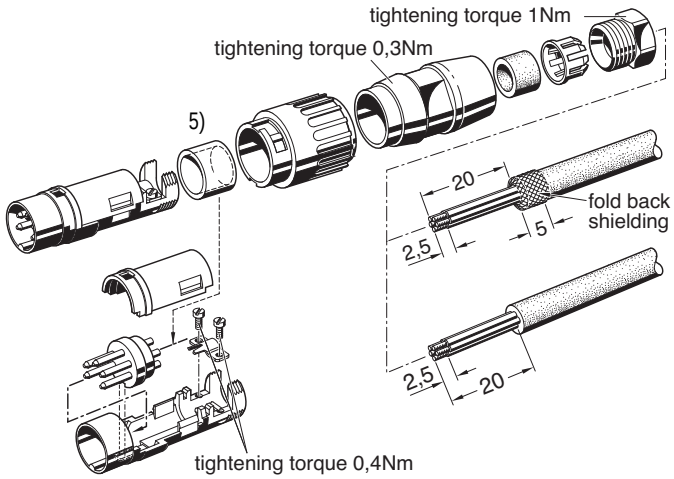

[5] Solder version only [6] Assembly instructions please refer to page 46, conneting instructions

C 091 B

Female cable connector, bayonet locking inside

Cable diameter 4-6 mm

Cable diameter 6-8 mm

Cable diameter 4-6 mm

Right-angled

Description	Drawing	No. of cont.	Part Number solder termination: Contact plating silver	Part Number solder termination: Contact plating gold [2]	Part Number Crimp termination [1]
Female cable connector, for cable diameter 4-6 mm, termination: solder or crimp, contact plating: silver or gold, cable sleeve: black.	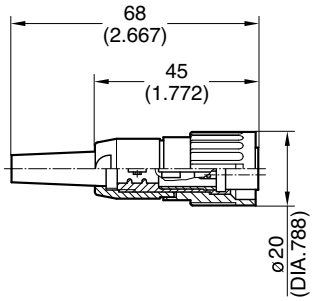	3 [3]	T 3275 501	T 3275 518 [4]	T 3275 551
		4 [3]	T 3325 501	T 3325 518 [4]	T 3325 551
		5	T 3375 501	T 3375 518 [4]	T 3375 551
		5 S [3]	T 3395 501 [4]	T 3395 518 [4]	T 3395 551 [4]
		6 [3]	T 3425 501	T 3425 518 [4]	T 3425 551
		7	T 3435 501	T 3435 518 [4]	T 3435 551
		7 [3]	T 3445 501 [4]	T 3445 518 [4]	T 3445 551 [4]
		8 [3]	T 3525 501 [4]	T 3525 518 [4]	T 3525 551 [4]
		12	T 3625 501 [4]	T 3625 518 [4]	–
		14	T 3645 501 [4]	T 3645 518 [4]	–
Female cable connector, for cable diameter 6-8 mm, termination: solder or crimp with clamping ring, contact plating: silver or gold.	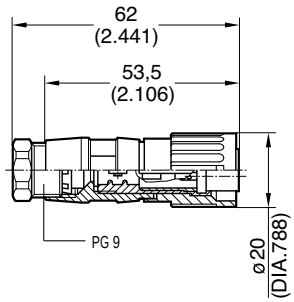	3 [3]	T 3275 502	T 3275 528 [4]	T 3275 552
		4 [3]	T 3325 502	T 3325 528 [4]	T 3325 552
		5	T 3375 502	T 3375 528 [4]	T 3375 552
		5 S [3]	T 3395 502 [4]	T 3395 528 [4]	T 3395 552 [4]
		6 [3]	T 3425 502	T 3425 528 [4]	T 3425 552
		7	T 3435 502	T 3435 528 [4]	T 3435 552
		7 [3]	T 3445 502 [4]	T 3445 528 [4]	T 3445 552 [4]
		8 [3]	T 3525 502 [4]	T 3525 528 [4]	T 3525 552 [4]
		12	T 3625 502 [4]	T 3625 528 [4]	–
		14	T 3645 502	T 3645 528 [4]	–
Female cable connector, for cable diameter 4-6 mm, termination: solder or crimp, contact plating: silver or gold.	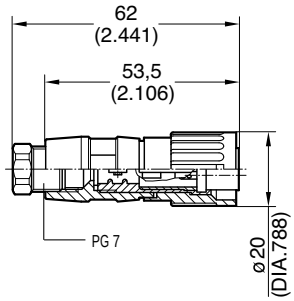	3 [3]	T 3275 504 [4]	T 3275 548 [4]	T 3275 554 [4]
		4 [3]	T 3325 504 [4]	T 3325 548 [4]	T 3325 554 [4]
		5	T 3375 504 [4]	T 3375 548 [4]	T 3375 554 [4]
		5 S [3]	T 3395 504 [4]	T 3395 548 [4]	T 3395 554 [4]
		6 [3]	T 3425 504 [4]	T 3425 548 [4]	T 3425 554 [4]
		7	T 3435 504 [4]	T 3435 548 [4]	T 3435 554 [4]
		7 [3]	T 3445 504 [4]	T 3445 548 [4]	T 3445 554 [4]
		8 [3]	T 3525 504 [4]	T 3525 548 [4]	T 3525 554 [4]
		12	T 3625 504 [4]	T 3625 548 [4]	–
		14	T 3645 504 [4]	T 3645 548 [4]	–
Female cable connector, right-angled, for cable diameter 4-6 mm, termination: solder or crimp, contact plating: silver or gold, cable sleeve: black.	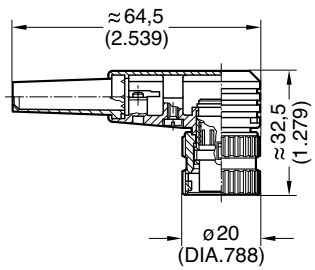	3 [3]	T 3275 005	T 3275 058 [4]	T 3275 055 [4]
		4 [3]	T 3325 005	T 3325 058 [4]	T 3325 055 [4]
		5	T 3375 005	T 3375 058 [4]	T 3375 055 [4]
		5 S [3]	T 3395 005	T 3395 058 [4]	T 3395 055 [4]
		6 [3]	T 3425 005	T 3425 058 [4]	T 3425 055 [4]
		7	T 3435 005	T 3435 058 [4]	T 3435 055 [4]
		7 [3]	T 3445 005 [4]	T 3445 058 [4]	T 3445 055 [4]
		8 [3]		T 3525 058 [4]	T 3525 055
		12	T 3625 005	T 3625 058 [4]	–
		14	T 3645 005	T 3645 058 [4]	–

[1] Please order crimp contacts separately, see page 43 [2] see remark page 20 [3] Contact order for DIN EN 60 130-9 [4] Available upon request.

C 091 B

Female cable connector, bayonet locking inside, assembly instructions

Female cable connector, cable diameter 4-6 mm [6]

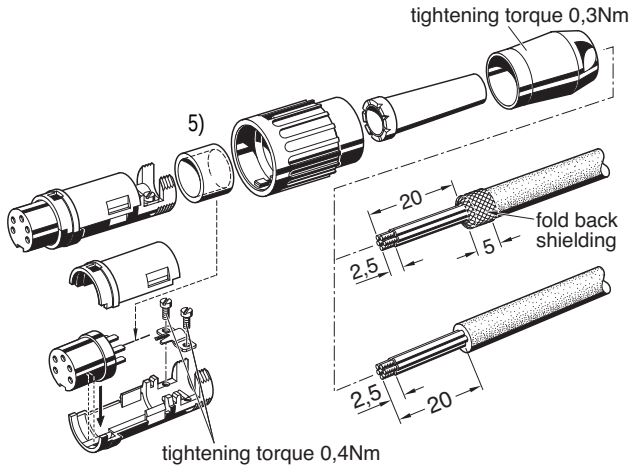

Female cable connector, cable diameter 4-6 mm or 6-8 mm [6]

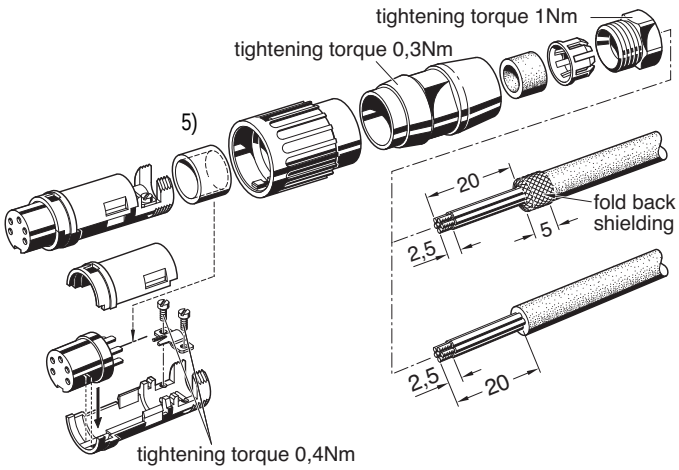

Female cable connector, right-angled, can be keyed to 8 angle positions [6]

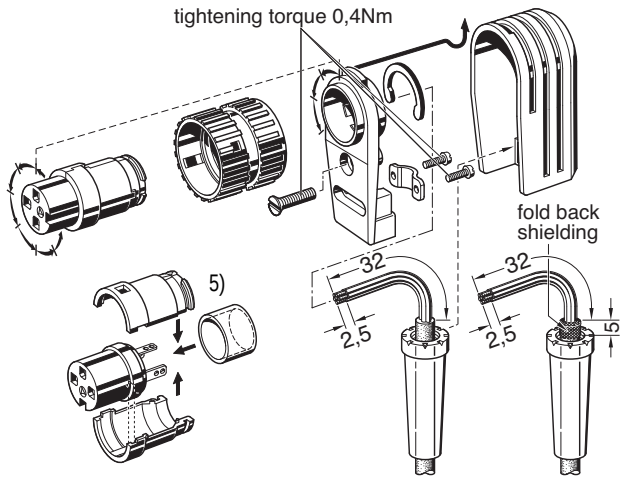

[5] Solder version only [6] Assembly instructions please refer to page 46, conneting instructions

C 091 B

Female cable connector, bayonet locking outside

Cable diameter 4-6 mm

Cable diameter 6-8 mm

Cable diameter 4-6 mm

Description	Drawing	No. of cont.	Part Number solder termination: Contact plating silver	Part Number solder termination: Contact plating gold [2]	Part Number Crimp termination [1]
Female cable connector, for cable diameter 4-6 mm, termination: solder or crimp, contact plating: silver or gold, cable sleeve: black.	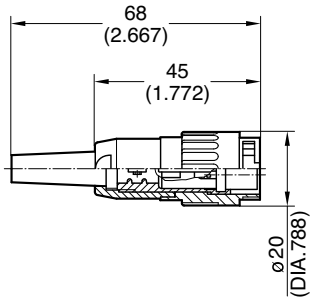	3 [3]	T 3278 501	T 3278 518	T 3278 551
		4 [3]	T 3328 501	T 3328 518	T 3328 551
		5	T 3378 501	T 3378 518	T 3378 551
		5 S [3]	T 3398 501	T 3398 518	T 3398 551 [4]
		6 [3]	T 3428 501	T 3428 518	T 3428 551
		7	T 3438 501	T 3438 518 [4]	T 3438 551
		7 [3]	T 3448 501 [4]	T 3448 518 [4]	T 3448 551 [4]
		8 [3]	T 3528 501	T 3528 518 [4]	T 3528 551
		12	T 3628 501 [4]	T 3628 518 [4]	–
		14	T 3648 501 [4]	T 3648 518 [4]	–
Female cable connector, for cable diameter 6-8 mm, termination: solder or crimp with clamping ring, contact plating: silver or gold.	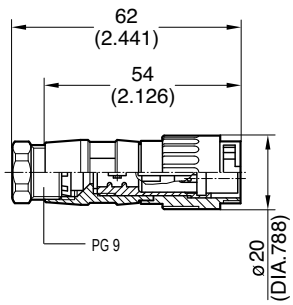	3 [3]	T 3278 502	T 3278 528 [4]	T 3278 552
		4 [3]	T 3328 502	T 3328 528 [4]	T 3328 552
		5	T 3378 502	T 3378 528 [4]	T 3378 552
		5 S [3]	T 3398 502 [4]	T 3398 528 [4]	T 3398 552 [4]
		6 [3]	T 3428 502	T 3428 528 [4]	T 3428 552
		7	T 3438 502	T 3438 528 [4]	T 3438 552
		7 [3]	T 3448 502 [4]	T 3448 528 [4]	T 3448 552 [4]
		8 [3]	T 3528 502	T 3528 528 [4]	T 3528 552 [4]
		12	T 3628 502	T 3628 528 [4]	–
		14	T 3648 502 [4]	T 3648 528 [4]	–
Female cable connector, for cable diameter 4-6 mm, termination: solder or crimp, contact plating: silver or gold.	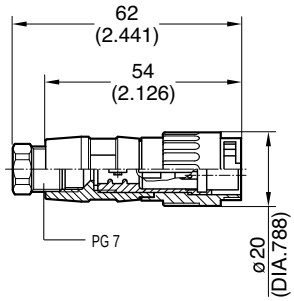	3 [3]	T 3278 504 [4]	T 3278 548 [4]	T 3278 554 [4]
		4 [3]	T 3328 504 [4]	T 3328 548 [4]	T 3328 554 [4]
		5	T 3378 504 [4]	T 3378 548 [4]	T 3378 554 [4]
		5 S [3]	T 3398 504 [4]	T 3398 548 [4]	T 3398 554 [4]
		6 [3]	T 3428 504 [4]	T 3428 548 [4]	T 3428 554 [4]
		7	T 3438 504 [4]	T 3438 548 [4]	T 3438 554 [4]
		7 [3]	T 3448 504 [4]	T 3448 548 [4]	T 3448 554 [4]
		8 [3]	T 3528 504 [4]	T 3528 548 [4]	T 3528 554 [4]
		12	T 3628 504 [4]	T 3628 548 [4]	–
		14	T 3648 504 [4]	T 3648 548 [4]	–

[1] Please order crimp contacts separately, see page 43 [2] see remark page 20 [3] Contact order for DIN EN 60 130-9 [4] Available upon request.

C 091 B

Female cable connector, bayonet locking outside, assembly instructions

Female cable connector, cable diameter 4-6 mm [6]

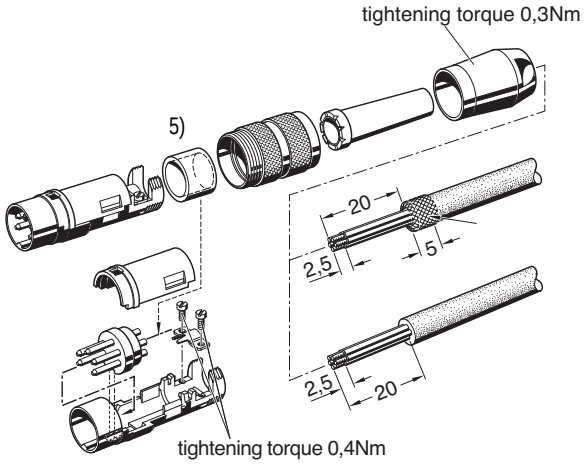

Female cable connector, cable diameter 4-6 mm or 6-8 mm [6]

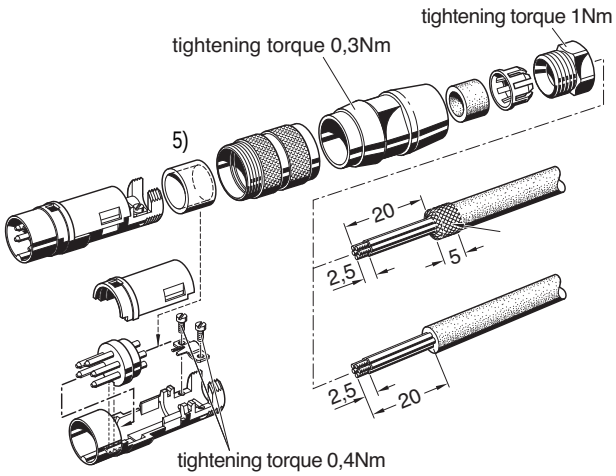

[5] Solder version only [6] Assembly instructions please refer to page 46, conneting instructions

C 091 B

Male and female cable connector, full plastic, bayonet locking

Description	Drawing	No. of cont.	Part Number solder termination: Contact plating silver	Part Number solder termination: Contact plating gold [2]	Part Number Crimp termination [1]
Male cable connector, bayonet locking inside, for cable diameter 4-6 mm, termination: solder or crimp, contact plating: silver or gold, cable sleeve: transparent except of 5S which is black.	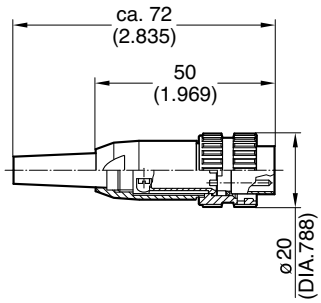	3 [3]	T 3274 991	–	T 3274 951
		4 [3]	T 3324 991	–	T 3324 951
		5	T 3374 991	–	T 3374 951
		5 S [3]	T 3394 991	T 3394 998	–
		6 [3]	T 3424 991	T 3424 998	T 3424 951
		7	T 3434 991	–	T 3434 951
		8	–	–	T 3524 951
Female cable connector, bayonet locking inside, for cable diameter 4-6 mm, termination: solder or crimp, contact plating: silver or gold, cable sleeve: transparent.	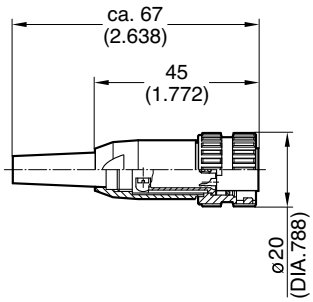	3 [3]	T 3275 991	–	T 3275 951 [4]
		4 [3]	T 3325 991	–	T 3325 951 [4]
		5	T 3375 991	–	T 3375 951
		6 [3]	T 3425 991	–	T 3425 951 [4]
		7	T 3435 991	–	T 3435 951 [4]
Female cable connector, bayonet locking outside, for cable diameter 4-6 mm, termination: solder or crimp, contact plating: silver or gold, cable sleeve: black.	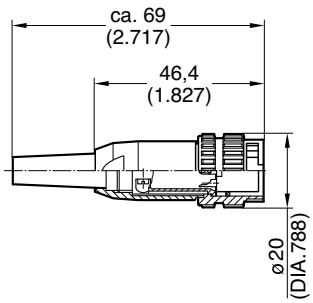	3 [3]	T 3278 991 [4]	–	T 3278 951 [4]
		4 [3]	T 3328 991	–	T 3328 951 [4]
		5	T 3378 991	–	T 3378 951 [4]
		6 [3]	T 3428 991	–	T 3428 951
		7	T 3438 991 [4]	–	T 3438 951 [4]

[1] Please order crimp contacts separately, see page 43 [2] see remark page 20 [3] Contact order for DIN EN 60 130-9 [4] Available upon request.

C 091 B

Female receptacle, bayonet locking

Ring nut

Bayonet outside

Bayonet inside

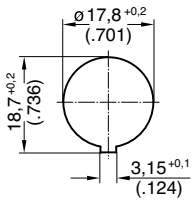

Panel cutout

Description	Drawing	No. of cont.	Part Number solder termination Contact plating silver	Part Number solder termination Contact plating gold [2]	Part Number Crimp termination [1]
Female receptacle, bayonet locking outside, shell: full plastic, front mounting, termination: solder or crimp, panel mounting with ring nut [3], contact plating: silver or gold.	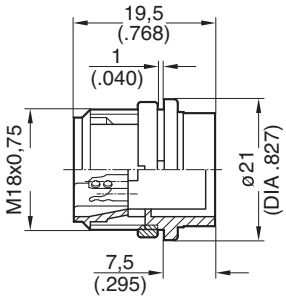	3 [5]	T 3277 000	T 3277 018	T 3277 050
		4 [5]	T 3327 000	T 3327 018	T 3327 050
		5	T 3377 000	T 3377 018	T 3377 050
		5 S [5]	–	–	–
		6 [5]	T 3427 000	T 3427 018	T 3427 050
		7	T 3437 000	T 3437 018	T 3437 050
		7 [5]	–	–	–
		8 [5]	–	–	–
		12	–	–	–
		14	–	–	–
Female receptacle, bayonet locking outside, shell: full plastic, front mounting, termination: solder or crimp, snap-in-mounting, contact plating: silver or gold.	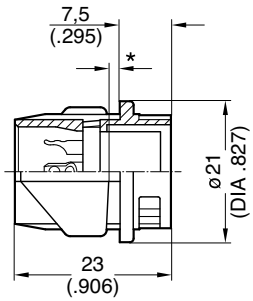 max. panel thickness 1,5 +0,25	3 [5]	T 3277 500	T 3277 518	T 3277 550
		4 [5]	T 3327 500	T 3327 518	T 3327 550
		5	T 3377 500	T 3377 518	T 3377 550
		5 S [5]	T 3397 500	T 3397 518	T 3397 550 [4]
		6 [5]	T 3427 500	T 3427 518	T 3427 550
		7	T 3437 500	T 3437 518	T 3437 550
		7 [5]	T 3447 500	T 3447 518	T 3447 550 [4]
		8 [5]	T 3527 500	T 3527 518 [4]	–
		12	T 3627 500	T 3627 518 [4]	–
		14	T 3647 500	T 3647 518 [4]	–
Female receptacle, bayonet locking inside, shell: full plastic, front mounting termination: solder or crimp, snap-in-mounting, contact plating: silver or gold.	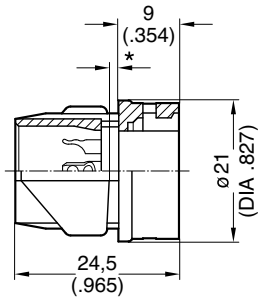 max. panel thickness 1,5 +0,25	3 [5]	T 3271 500	T 3271 518 [4]	T 3271 550
		4 [5]	T 3321 500	T 3321 518 [4]	T 3321 550
		5	T 3371 500	T 3371 518 [4]	T 3371 550
		5 S [5]	T 3391 500 [4]	T 3391 518 [4]	T 3391 550 [4]
		6 [5]	T 3421 500	T 3421 518 [4]	T 3421 550
		7	T 3431 500	T 3431 518 [4]	T 3431 550
		7 [5]	T 3441 500	T 3441 518 [4]	T 3441 550 [4]
		8 [5]	T 3521 500	T 3521 518 [4]	T 3521 550 [4]
		12	T 3621 500	T 3621 518 [4]	–
		14	T 3641 500	T 3641 518 [4]	–
Female receptacle, bayonet locking outside, shell: metal, rear mounting, termination: solder or crimp, panel mounting with ring nut [3], contact plating: silver.	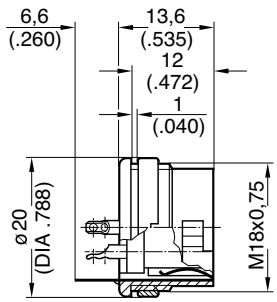 panel cutout see page 16	3 [5]	T 3277 100	–	T 3277 150
		4 [5]	T 3327 100	–	T 3327 150 [4]
		5	T 3377 100	–	T 3377 150 [4]
		5 S [5]	T 3397 100	–	T 3397 150
		6 [5]	T 3427 100	–	T 3427 150 [4]
		7	T 3437 100 [4]	–	T 3437 150 [4]
		7 [5]	T 3447 100	–	T 3447 150
		8 [5]	T 3527 100	–	T 3527 150
		12	T 3627 100 [4]	–	–
		14	T 3647 100 [4]	–	–

[1] Please order crimp contacts separately, see page 43 [2] see remark page 20 [3] Panel mounting with hex nut upon request
[4] Available upon request.

C 091 B

Female receptacle, bayonet locking outside right-angled, pcb mount type

full plastic

metal

Description	Drawing	No. of cont.	Part Number solder termination contact plating silver
Female receptacle, bayonet locking outside, right- angled, shell: full plastic black, contact plating: silver.	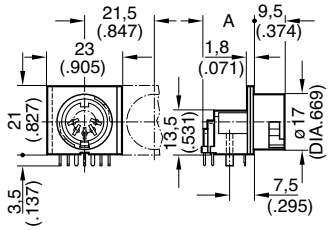 C091B-49a	3 [1]	T 3277 600
		4 [1]	–
		5	T 3377 600
		5 S [1]	T 3397 600
		6 [1]	T 3427 600
		7	–
		7 [1]	–
		8 [1]	–
		12	–
		14	–

PCB-layout components side

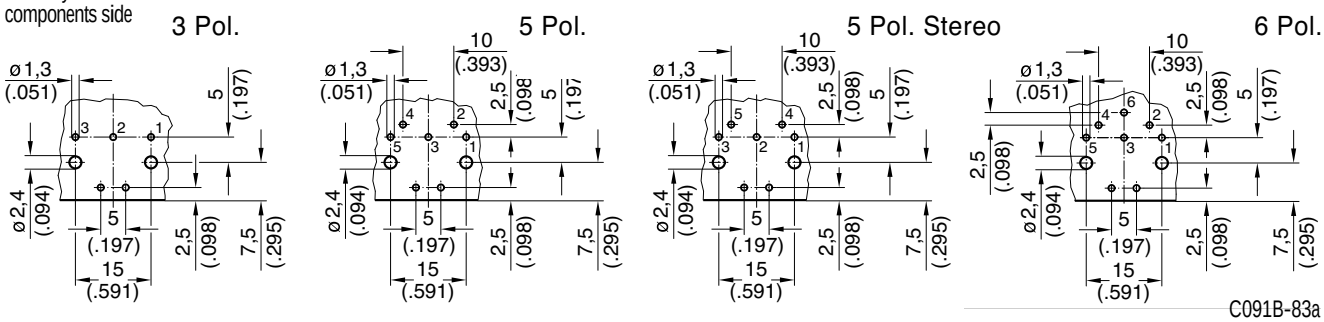

C091B-83a

[1] Contact order for DIN EN 60 130-9

Description	Drawing	No. of cont.	Part Number solder termination contact plating silver
Female receptacle, bayonet locking outside, right- angled, shell: metal, contact plating: silver.	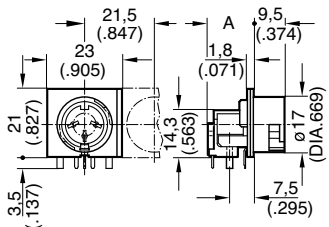 C091B-52a	3 [1]	T 3277 900
		4 [1]	–
		5	–
		5 S [1]	T 3397 900
		6 [1]	–
		7	–
		7 [1]	T 3447 900
		8 [1]	T 3527 900
		12	–
		14	–

PCB-layout components side

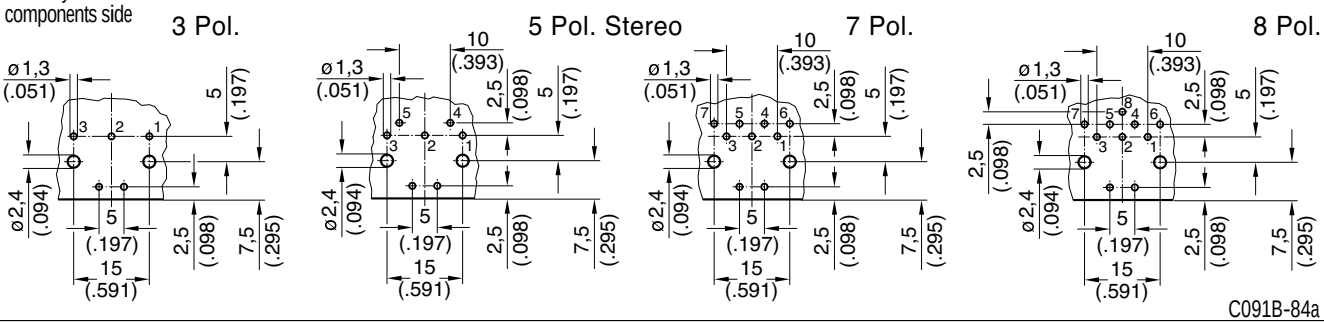

C091B-84a

C 091 B

Male receptacle, bayonet locking, outside

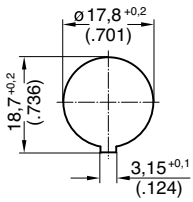

Panel cutout

Description	Drawing	No. of cont.	Part Number solder termination: Contact plating silver	Part Number solder termination: Contact plating gold [2]	Part Number Crimp termination [1]
Male receptacle, bayonet locking outside, front mounting, shell: full plastic, termination: solder or crimp, snap-in-mounting, contact plating: silver or gold.	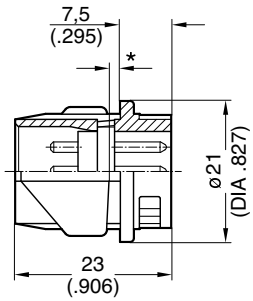 max. panel thickness 1,5 +0,25 C091B-85a	3 [5]	T 3276 500	T 3276 518 [4]	T 3276 550
		4 [5]	T 3326 500	T 3326 518 [4]	T 3326 550
		5	T 3376 500	T 3376 518 [4]	T 3376 550
		5 S [5]	T 3396 500 [4]	T 3396 518 [4]	T 3396 550 [4]
		6 [5]	T 3426 500	T 3426 518 [4]	T 3426 550
		7	T 3436 500	T 3436 518 [4]	T 3436 550
		7 [5]	T 3446 500 [4]	T 3446 518 [4]	T 3446 550 [4]
		8 [5]	T 3526 500 [4]	T 3526 518 [4]	T 3526 550
		12	T 3626 500 [4]	T 3626 518 [4]	–
		14	T 3646 500 [4]	T 3646 518 [4]	–

[1] Please order crimp contacts separately, see page 43 [2] see remark page 20 [3] Panel mounting with hex nut upon request
[4] Available upon request. [5] Contact order for DIN EN 60 130-9

Panel Version 1
for female receptacle e.g. T 3277 200

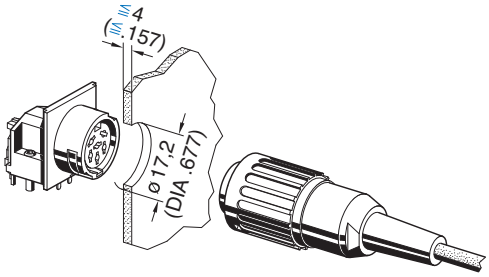

Panel Version 2
for female receptacle e.g. T 3277 200

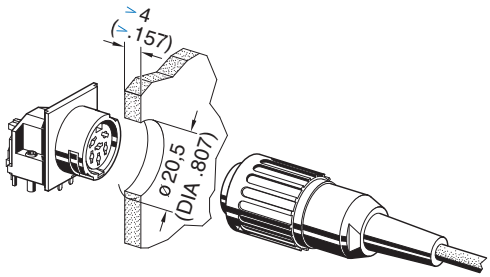

C 091 D

Main Features

- Metal locking ring; screw locking according to DIN EN 60130-9 / IEC 60130-9
- Full metal construction
- Protection class IP 65 and IP 67
- Number of contacts: 3 – 8, 12 and 14 contacts
- Internal strain relief
- Good shielding effectiveness when mated and locked
- Male and female cable connectors
  - Straight or right angled
  - Solder connection: 3 – 8, 12 and 14 contacts
  - Crimp connection: 3 – 8 contacts
  - With cable glands for cable diameter 4 – 6 mm or 6 – 8 mm
- Male and female receptacles
  - Panel mount types for front or rear panel mounting
  - Pcb mount types, straight
  - With 4-hole flange
  - With dip solder contacts of various contact lengths
  - Solder connection: 3 – 8, 12 and 14 contacts
  - Crimp connection: 3 – 8 contacts
- UL registered under file number E 63 093 UL [1)]

UNDERWRITERS LABORATORIES INC.

[1)] In general approvals refer to representative versions of the connector series. Test report upon request.

C 091 D

Characteristics

General Characteristics	Standard	Characteristics									
Number of contacts		3	4	5	5 Stereo	6	7	7	8	12	14
View on termination side of contact insert											
Contact arrangement acc. to DIN		41 524	–	–	41 524	45 322	–	45 329	45 326	–	–
Contact arrangement acc. to IEC		60130-9	60130-9	–	60130-9	60130-9	–	60130-9	60130-9	–	–
Electrical Characteristics											
Rated voltage	IEC 60664-1	300 V ≈			100V ≈	300 V ≈		100 V ≈		150 V ≈	
Rated voltage	UL 1977	250 V								60 V	
Rated impulse withstand voltage	IEC 60664-1	1500 V			1200 V	1500 V		1200 V			
Pollution degree	IEC 60664-1	1									
Installation category	IEC 60664-1	I									
Insulation group	IEC 60664-1	II, 400 ≤ CTI < 600									
Current rating	IEC 60512-5-2 Test 5 b UL 1977	5 A / + 40 °C / + 104 °F please refer also to current derating curves page 45								3 A / + 40 °C / + 104 °F	
Insulation resistance	IEC 60512-3-1 Test 3 a	> 10^{10} Ω									
Contact resistance	IEC 60512-2-1 Test 2 a	< 5 m Ω									
Climatic Characteristics											
Climatic category	IEC 60668-1	40 / 100 / 56									
Temperature range	IEC 60668-1	- 40 °C ... + 100 °C / - 40 °F ... + 212 °F									
Mechanical Characteristics											
IP-degree	IEC 60529	IP 67 / IP 65									
Insertion and withdrawal forces	IEC 60512-13-2 Test 13 b	25 N 90.oz	30 N 110.oz	35 N 125.oz		50 N 180.oz	55 N 200.oz		60 N 220.oz	50 N 180.oz	
Mechanical operation	IEC 60512 Test 9 a	Silver ≥ 500 mating cycles Gold ≥ 1000 mating cycles									
Materials											
Housing material		die cast, nickel plated									
Dielectric material		thermoplastic									
Sealing material		neoprene									
Contact plating		silver plated / gold plated *									
Further Characteristics											
Termination technique		solder, crimp								solder	
Wire gauge		solder: ≤ 0,5 mm^2 / 20 AWG crimp: 2 - 6 pol (excluding 5S): 0,09 - 1,00 mm^2 / 28 - 18 AWG crimp: 5S, 7, 7S and 8-pol.: 0,09 - 0,75 mm^2 / 28 - 20 AWG								≤ 0,25 mm^2/24 AWG	
Flammability		UL 94 V0									
Locking system	IEC 60130-9	metal screw coupling; tightening torque 0,5 - 0,7 Nm									
UL	UL 1977	Conditions of acceptability									

Caution: Do not connect or disconnect under load. Metal housing parts shall be securely incorporated to protected ground.

*** Remark for gold plated contacts:** In order to avoid brittle inter-metallic connections, gold-plated terminals have to be tin-plated in the solder area.

IEC 60 664 ≙ DIN VDE 0110 ; IEC 60 512-x ≙ DIN EN 60 512-x

C 091 D

Male cable connector

Description	Drawing	No. of cont.	Part Number solder termination: Contact plating silver	Part Number solder termination: Contact plating gold [2]	Part Number Crimp termination [1]
Male cable connector, straight, for cable diameter 4-6 mm, termination: solder or crimp, contact plating: silver or gold.	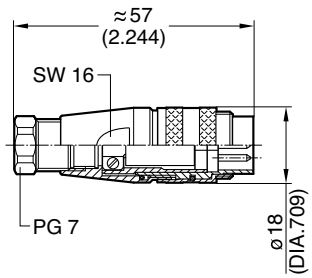	3 [3]	C091 31H003 100 2	–	C091 11H003 000 2
		4 [3]	C091 31H004 100 2	–	C091 11H004 000 2
		5	C091 31H005 100 2	C091 31H005 200 2	C091 11H005 000 2
		5S [3]	C091 31H105 100 2	C091 31H105 200 2	C091 11H105 000 2
		6 [3]	C091 31H006 100 2	C091 31H006 200 2	C091 11H006 000 2
		7	C091 31H007 100 2	–	C091 11H007 000 2
		7 [3]	C091 31H107 100 2	C091 31H107 200 2	C091 11H107 000 2
		8 [3]	C091 31H008 100 2	C091 31H008 200 2	C091 11H008 000 2
		12	C091 31H012 100 2	C091 31H012 200 2	–
		14	C091 31H014 100 2	C091 31H014 200 2	–
Male cable connector, straight, for cable diameter 6-8 mm, termination: solder or crimp, contact plating: silver or gold.	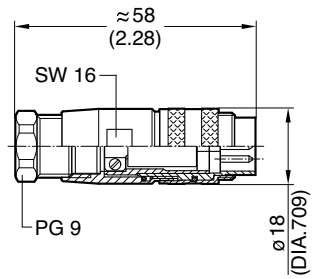	3 [3]	C091 31H003 101 2	–	C091 11H003 001 2
		4 [3]	C091 31H004 101 2	–	C091 11H004 001 2
		5	C091 31H005 101 2	–	C091 11H005 001 2
		5S [3]	C091 31H105 101 2	–	C091 11H105 001 2
		6 [3]	C091 31H006 101 2	–	C091 11H006 001 2
		7	C091 31H007 101 2	C091 31H007 201 2	C091 11H007 001 2
		7 [3]	C091 31H107 101 2	–	C091 11H107 001 2
		8 [3]	C091 31H008 101 2	C091 31H008 201 2	C091 11H008 001 2
		12	C091 31H012 101 2	C091 31H012 201 2	–
		14	–	C091 31H014 201 2	–

[1] Please order crimp contacts separately, see page 43 [2] see remark page 34 [3] Contact order for DIN EN 60 130-9

Assembly instructions [6]

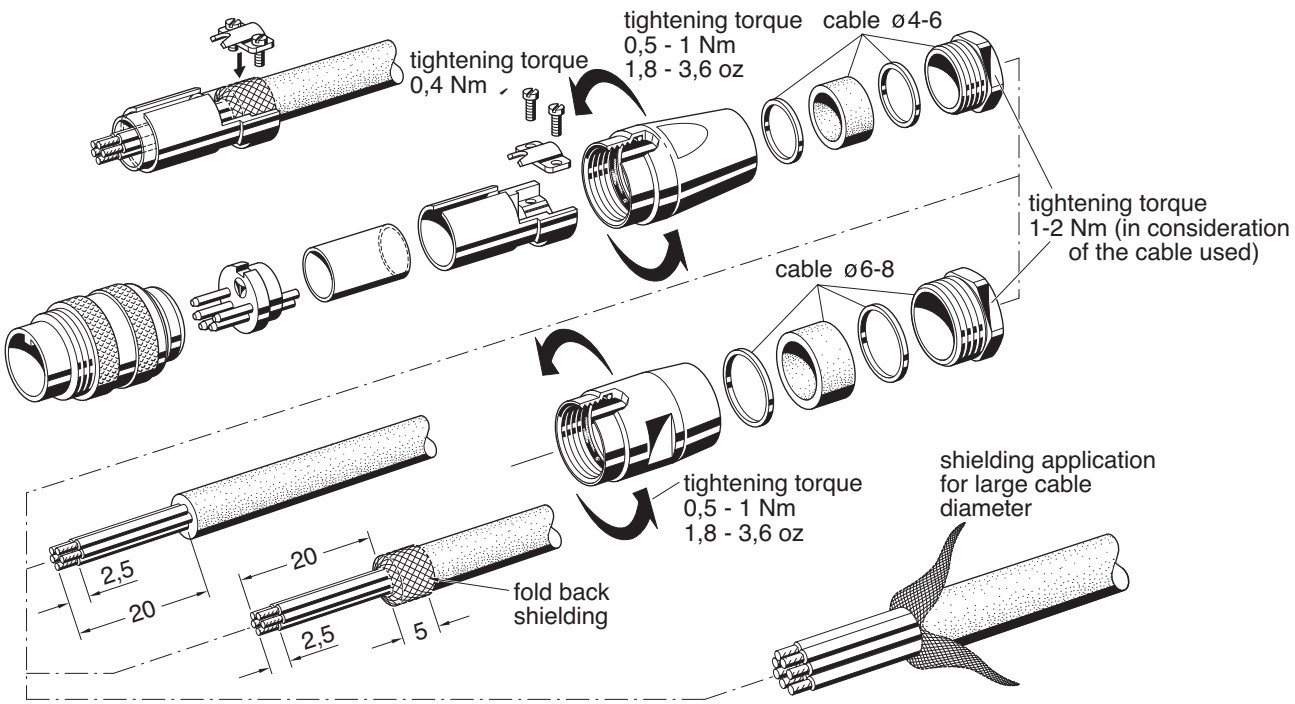

[5] Solder version only [6] Assembly instructions please refer to page 46, conneting instructions

C 091 D

Female cable connector

Description	Drawing	No. of cont.	Part Number solder termination: Contact plating silver	Part Number solder termination: Contact plating gold [2]	Part Number Crimp termination [1]
Female cable connector, straight, for cable diameter 4-6 mm, termination: solder or crimp, contact plating: silver or gold.	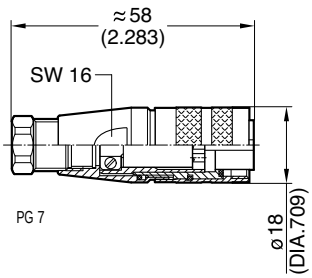	3 [3]	C091 31D003 100 2	–	C091 11D003 000 2
		4 [3]	C091 31D004 100 2	–	C091 11D004 000 2
		5	C091 31D005 100 2	C091 31D005 200 2	C091 11D005 000 2
		5S [3]	C091 31D105 100 2	–	C091 11D105 000 2
		6 [3]	C091 31D006 100 2	C091 31D006 200 2	C091 11D006 000 2
		7	C091 31D007 100 2	–	C091 11D007 000 2
		7 [3]	C091 31D107 100 2	–	C091 11D107 000 2
		8 [3]	C091 31D008 100 2	C091 31D008 200 2	C091 11D008 000 2
		12	C091 31D012 100 2	C091 31D012 200 2	–
		14	C091 31D014 100 2	C091 31D014 200 2	–
Female cable connector, straight, for cable diameter 6-8 mm, termination: solder or crimp, contact plating: silver or gold.	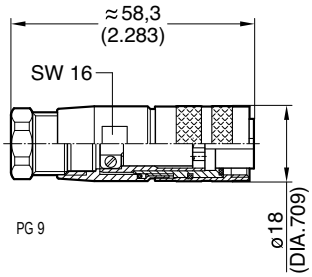	3 [3]	C091 31D003 101 2	–	C091 11D003 001 2
		4 [3]	C091 31D004 101 2	–	C091 11D004 001 2
		5	C091 31D005 101 2	–	C091 11D005 001 2
		5S [3]	C091 31D105 101 2	–	C091 11D105 001 2
		6 [3]	C091 31D006 101 2	–	C091 11D006 001 2
		7	C091 31D007 101 2	C091 31D007 201 2	C091 11D007 001 2
		7 [3]	C091 31D107 101 2	–	C091 11D107 001 2
		8 [3]	C091 31D008 101 2	C091 31D008 201 2	C091 11D008 001 2
		12	–	C091 31D012 201 2	–
		14	–	C091 31D014 201 2	–

[1] Please order crimp contacts separately, see page 43 [2] see remark page 34 [3] Contact order for DIN EN 60 130-9

Assembly instructions [6]

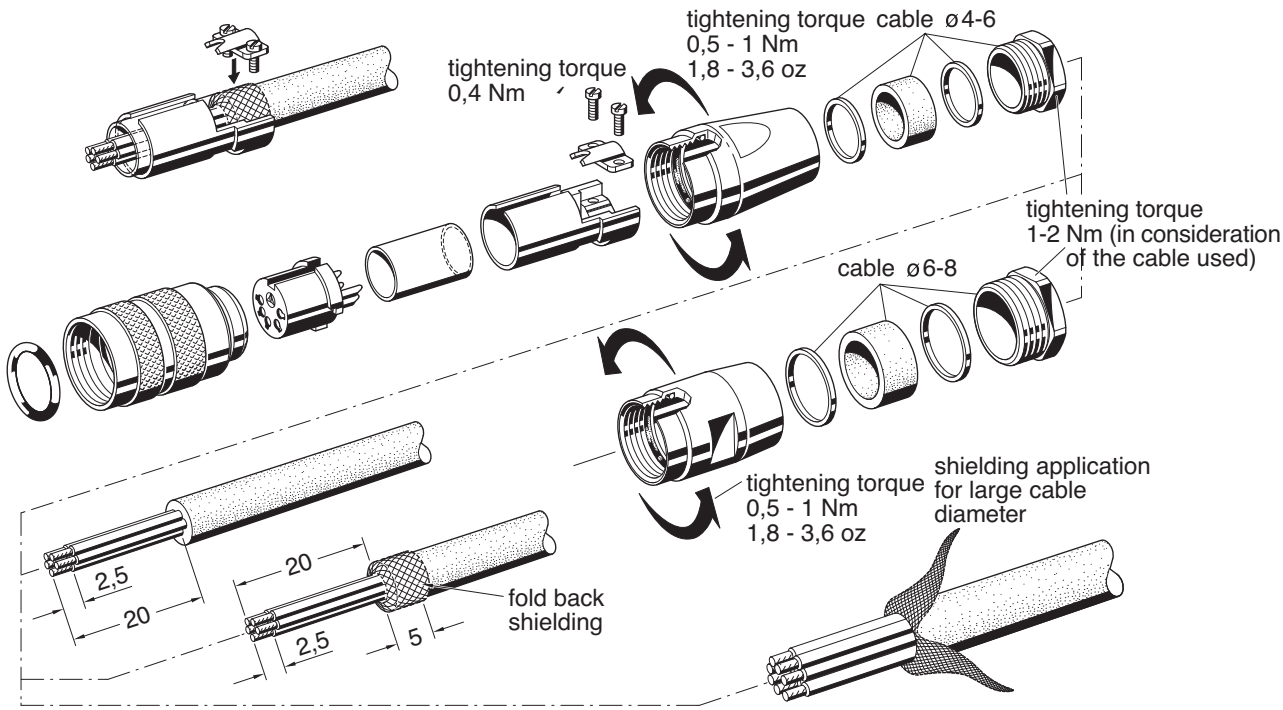

[5] Solder version only [6] Assembly instructions please refer to page 46 , conneting instructions

C 091 D

Connector Right Angle

Description	Drawing	No. of cont.	Part Number solder termination Contact plating silver	Part Number Crimp termination [1]
Male cable connector, right angled, for cable diameter 4-6 mm, termination: solder or crimp. Dimension A = 55,5 mm	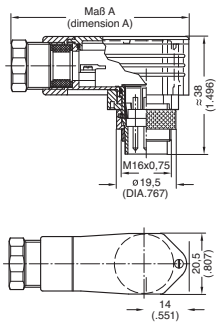	3 [3]	C091 31K003 100 2	C091 11K003 000 2
		4 [3]	C091 31K004 100 2	C091 11K004 000 2
		5	C091 31K005 100 2	C091 11K005 000 2
		5S [3]	C091 31K105 100 2	C091 11K105 000 2
		6 [3]	C091 31K006 100 2	C091 11K006 000 2
		7	C091 31K007 100 2	C091 11K007 000 2
		7 [3]	C091 31K107 100 2	C091 11K107 000 2
		8 [3]	C091 31K008 100 2	C091 11K008 000 2
		12	C091 31K012 100 2	–
		14	C091 31K014 100 2	–
Male cable connector, right angled, for cable diameter 6-8 mm, termination: solder or crimp. Dimension A = 57,5 mm	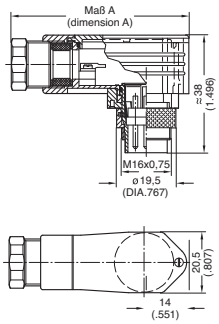	3 [3]	C091 31K003 101 2 [5]	C091 11K003 001 2 [5]
		4 [3]	C091 31K004 101 2 [5]	C091 11K004 001 2 [5]
		5	C091 31K005 101 2	C091 11K005 001 2 [5]
		5S [3]	C091 31K105 101 2	C091 11K105 001 2 [5]
		6 [3]	C091 31K006 101 2	C091 11K006 001 2
		7	C091 31K007 101 2	C091 11K007 001 2
		7 [3]	C091 31K107 101 2	C091 11K107 001 2
		8 [3]	C091 31K008 101 2	C091 11K008 001 2
		12	C091 31K012 101 2	–
		14	C091 31K014 101 2	–

[1] Please order crimp contacts separately, see page 43 [3] Contact order for DIN EN 60 130-9 [5] Available upon request.

Assembly instructions [4]

Can be keyed to 8 angle positions

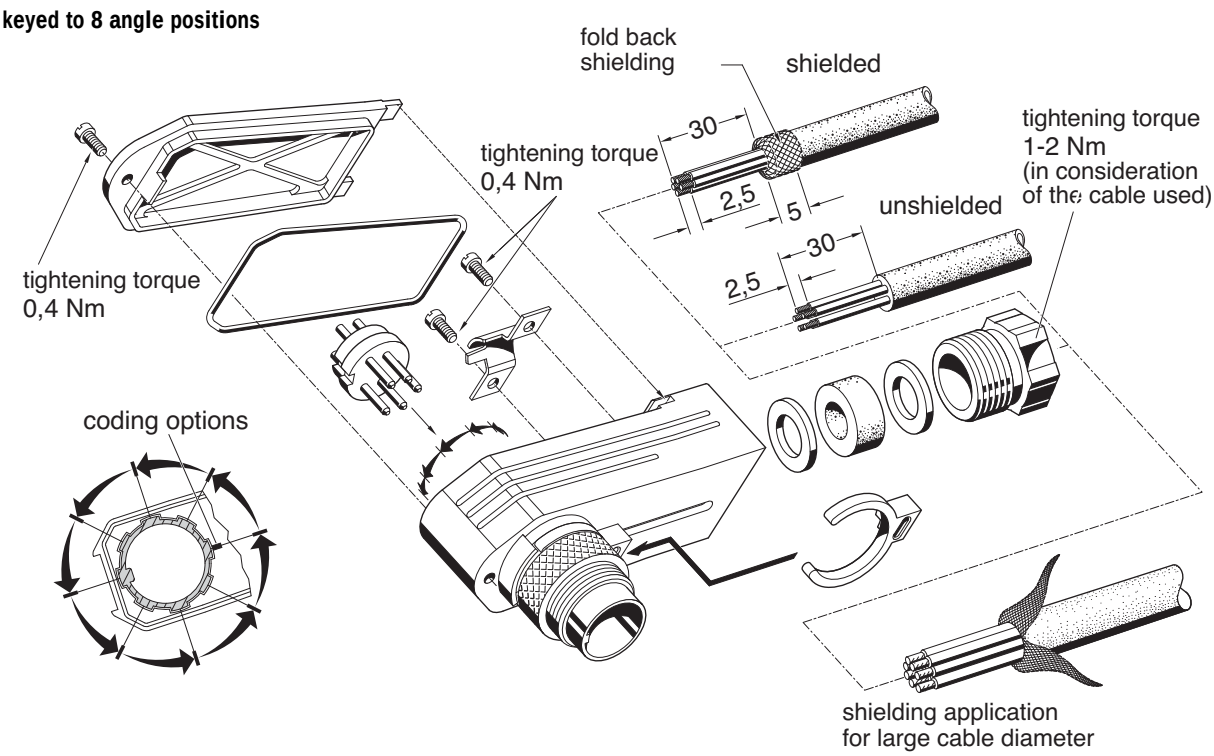

[4] For assembly Instructions please refer to page 46, conneting instructions

C 091 D

Connector Right Angle

Description	Drawing	No. of cont.	Part Number solder termination Contact plating silver	Part Number Crimp termination [1]
Female cable connector, right angled, for cable diameter 4-6 mm, termination: solder or crimp. Dimension A = 55,5 mm	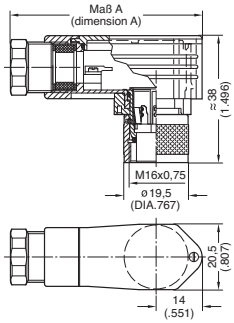	3 [3]	C091 31F003 100 2	C091 11F003 000 2
		4 [3]	C091 31F004 100 2	C091 11F004 000 2
		5	C091 31F005 100 2	C091 11F005 000 2
		5S [3]	C091 31F105 100 2	C091 11F105 000 2
		6 [3]	C091 31F006 100 2	C091 11F006 000 2
		7	C091 31F007 100 2	C091 11F007 000 2
		7 [3]	C091 31F107 100 2	C091 11F107 000 2
		8 [3]	C091 31F008 100 2	C091 11F008 000 2
		12	C091 31F012 100 2	–
		14	C091 31F014 100 2	–
Female cable connector, right angled, for cable diameter 6-8 mm, termination: solder or crimp. Dimension A = 57,5 mm	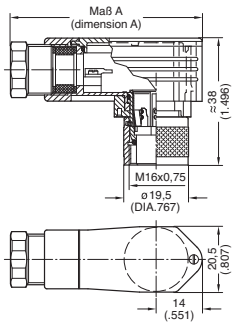	3 [3]	C091 31F003 101 2 [5]	C091 11F003 001 2 [5]
		4 [3]	C091 31F004 101 2 [5]	C091 11F004 001 2 [5]
		5	C091 31F005 101 2	C091 11F005 001 2 [5]
		5S [3]	C091 31F105 101 2	C091 11F105 001 2 [5]
		6 [3]	C091 31F006 101 2	C091 11F006 001 2
		7	C091 31F007 101 2	C091 11F007 001 2
		7 [3]	C091 31F107 101 2	C091 11F107 001 2
		8 [3]	C091 31F008 101 2	C091 11F008 001 2
		12	C091 31F012 101 2	–
		14	C091 31F014 101 2	–

[1] Please order crimp contacts separately, see page 43 [3] Contact order for DIN EN 60 130-9 [5] Available upon request

Assembly instructions [4]

Can be keyed to 8 angle positions

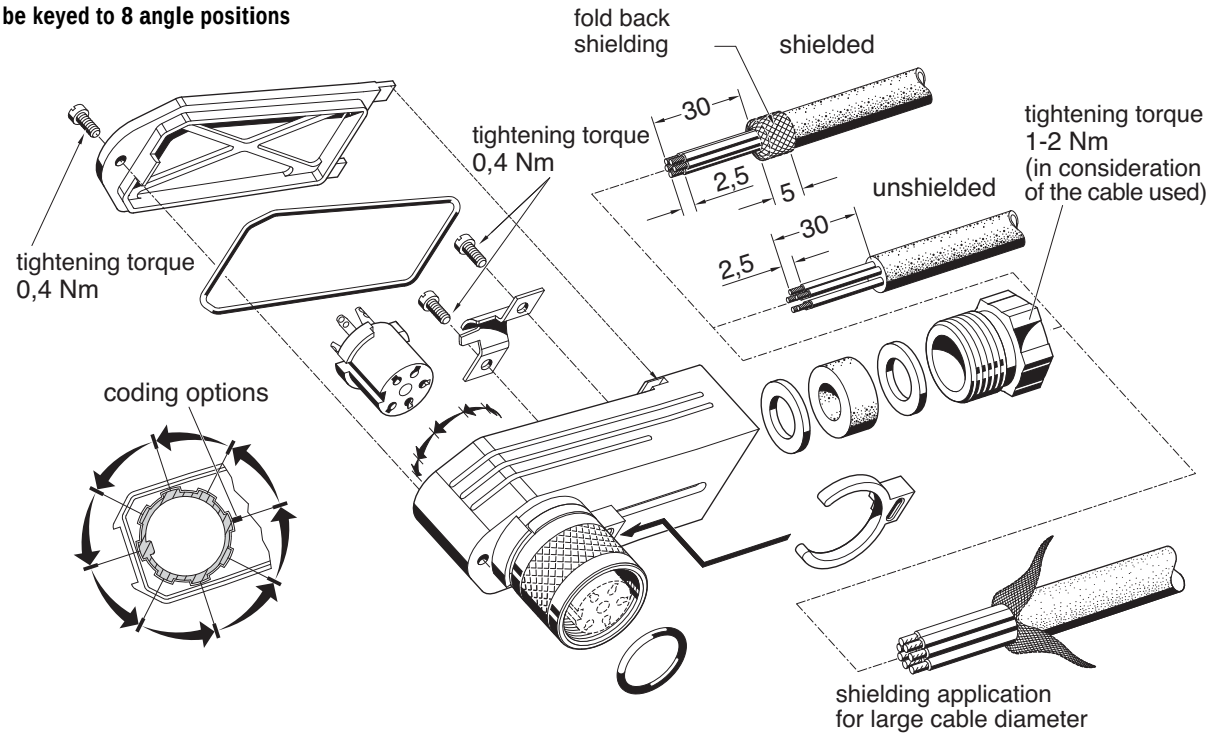

[4] For assembly Instructions please refer to page 46, conneting instructions

C 091 D

Female receptacle for front mounting

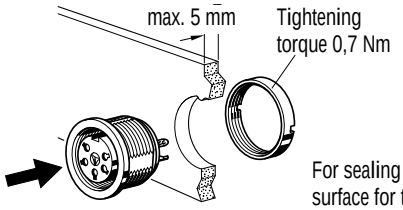

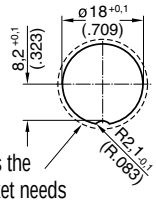

For sealing reasons the surface for the gasket needs to be level and free of burrs.

Panel cutout

Description	Drawing	No. of cont.	Part Number solder termination: Contact plating silver	Part Number solder termination: Contact plating gold [2]	Part Number Crimp termination [1]
Female receptacle, termination: solder or crimp, contact plating: silver or gold, panel mounting with ring nut, sealing with O-Ring.	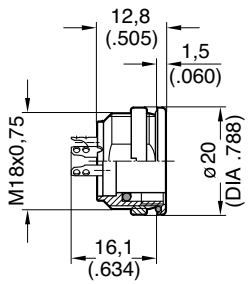	3 [3]	C091 31N003 100 2	–	C091 11N003 000 2
		4	C091 31N004 100 2	–	C091 11N004 000 2
		5	C091 31N005 100 2	C091 31N005 200 2	C091 11N005 000 2
		5S [3]	C091 31N105 100 2	–	C091 11N105 000 2
		6 [3]	C091 31N006 100 2	–	C091 11N006 000 2
		7	C091 31N007 100 2	–	C091 11N007 000 2
		7 [3]	C091 31N107 100 2	–	C091 11N107 000 2
		8 [3]	C091 31N008 100 2	C091 31N008 200 2	C091 11N008 000 2
		12	C091 31N012 100 2	C091 31N012 200 2	–
		14	C091 31N014 100 2	C091 31N014 200 2	–
Female receptacle, termination: straight dip solder, contact plating: silver or gold, pin length 15 mm from flange, panel mounting with ring nut, sealing with O-Ring, solder area: tin plated.	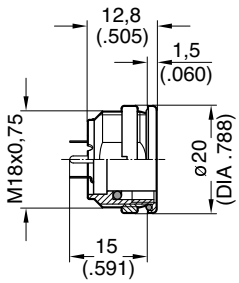	3 [3]	C091 61N003 110 2	–	–
		4 [3]	C091 61N004 110 2	–	–
		5	C091 61N005 110 2	–	–
		5S [3]	C091 61N105 110 2	–	–
		6	C091 61N006 110 2	–	–
		7	C091 61N007 110 2	–	–
		7 [3]	C091 61N107 110 2	–	–
		8 [3]	C091 61N008 110 2	–	–
		12	–	C091 61N012 210 2	–
		14	–	C091 61N014 210 2	–
Female receptacle, termination: straight dip solder, contact plating: silver, pin length 19 mm from flange, panel mounting with ring nut, sealing with O-Ring, solder area: tin plated.	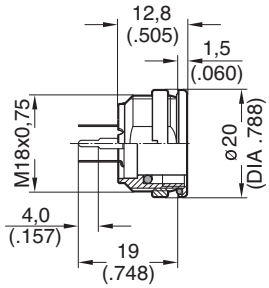	3 [3]	C091 61N003 120 2	–	–
		4 [3]	C091 61N004 120 2	–	–
		5	C091 61N005 120 2	–	–
		5S [3]	C091 61N105 120 2	–	–
		6 [3]	C091 61N006 120 2	–	–
		7	C091 61N007 120 2	–	–
		7 [3]	C091 61N107 120 2	–	–
		8 [3]	C091 61N008 120 2	–	–
		12	–	–	–
		14	–	–	–
Female receptacle, termination: straight dip solder, contact plating: silver, pin length 24 mm from flange, panel mounting with ring nut, sealing with O-Ring, solder area: tin plated.	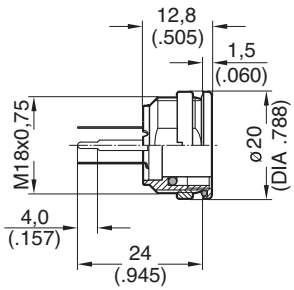	3 [3]	C091 61N003 130 2	–	–
		4 [3]	C091 61N004 130 2	–	–
		5	C091 61N005 130 2	–	–
		5S [3]	C091 61N105 130 2	–	–
		6 [3]	C091 61N006 130 2	–	–
		7	C091 61N007 130 2	–	–
		7 [3]	C091 61N107 130 2	–	–
		8 [3]	C091 61N008 130 2	–	–
		12	–	–	–
		14	–	–	–

[1] Please order crimp contacts separately, see page 43 [2] see remark page 34 [3] Contact order for DIN EN 60 130-9 [4] Available upon request.

C 091 D

Female receptacle for rear mounting

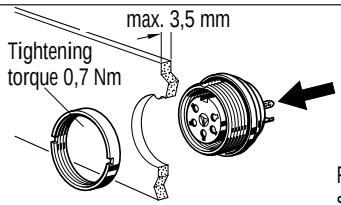

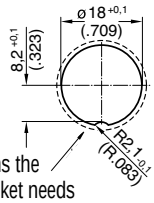

For sealing reasons the surface for the gasket needs to be level and free of burrs.

Panel cutout

Description	Drawing	No. of cont.	Part Number solder termination: Contact plating silver	Part Number solder termination: Contact plating gold [2]	Part Number Crimp termination [1]
Female receptacle, termination: solder or crimp, contact plating: silver or gold, panel mounting with ring nut, sealing with O-Ring.	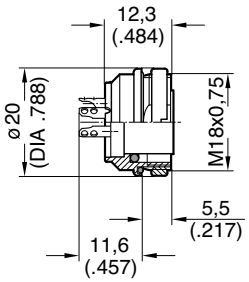	3 [3]	C091 31G003 100 2	–	C091 11G003 000 2
		4 [3]	C091 31G004 100 2	C091 31G004 200 2	C091 11G004 000 2
		5	C091 31G005 100 2	C091 31G005 200 2	C091 11G005 000 2
		5S [3]	C091 31G105 100 2	–	C091 11G105 000 2
		6 [3]	C091 31G006 100 2	–	C091 11G006 000 2
		7	C091 31G007 100 2	C091 31G007 200 2	C091 11G007 000 2
		7 [3]	C091 31G107 100 2	–	C091 11G107 000 2
		8 [3]	C091 31G008 100 2	C091 31G008 200 2	C091 11G008 000 2
		12	C091 31G012 100 2	C091 31G012 200 2	–
		14	C091 31G014 100 2	C091 31G014 200 2	–
Female receptacle, termination: straight dip solder, contact plating: silver or gold, pin length 10.5 mm from flange, panel mounting with ring nut, sealing with O-Ring, solder area: tin plated.	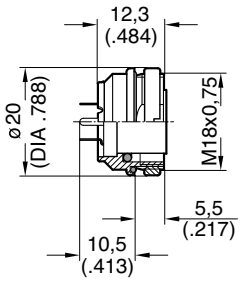	3 [3]	C091 61G003 110 2	–	–
		4 [3]	C091 61G004 110 2	–	–
		5	C091 61G005 110 2	–	–
		5S [3]	C091 61G105 110 2	–	–
		6 [3]	C091 61G006 110 2	C091 G006 210 2	–
		7	C091 61G007 110 2	–	–
		7 [3]	C091 61G107 110 2	–	–
		8 [3]	C091 61G008 110 2	–	–
		12	C091 61G012 110 2	C091 61G012 210 2	–
		14	C091 61G014 110 2	C091 61G014 210 2	–
Female receptacle, termination: straight dip solder, contact plating: silver, pin length 14,5 mm from flange, panel mounting with ring nut, sealing with O-Ring, solder area: tin plated.	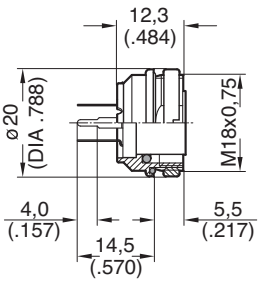	3 [3]	C091 61G003 120 2	–	–
		4 [3]	C091 61G004 120 2	–	–
		5	C091 61G005 120 2	–	–
		5S [3]	C091 61G105 120 2	–	–
		6 [3]	C091 61G006 120 2	–	–
		7	C091 61G007 120 2	–	–
		7 [3]	C091 61G107 120 2	–	–
		8 [3]	C091 61G008 120 2	–	–
		12	–	–	–
		14	–	–	–
Female receptacle, termination: straight dip solder, contact plating: silver, pin length 19,5 mm from flange, panel mounting with ring nut, sealing with O-Ring, solder area: tin plated.	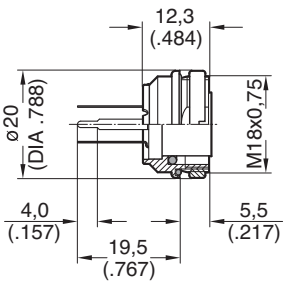	3 [3]	C091 61G003 130 2	–	–
		4 [3]	C091 61G004 130 2	–	–
		5	C091 61G005 130 2	–	–
		5S [3]	C091 61G105 130 2	–	–
		6 [3]	C091 61G006 130 2	–	–
		7	C091 61G007 130 2	–	–
		7 [3]	C091 61G107 130 2	–	–
		8 [3]	C091 61G008 130 2	–	–
		12	–	–	–
		14	–	–	–

[1] Please order crimp contacts separately, see page 43
[2] see remark page 34
[3] Contact order for DIN EN 60 130-9
[4] Available upon request.

C 091 D

Female receptacle for flange mounting

For sealing reasons the surface for the gasket needs to be level and free of burrs. Provide suitable sealing for the screws.

Panel Cutout

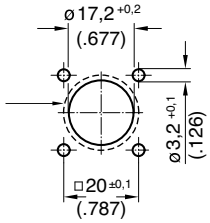

Description	Drawing	No. of cont.	Part Number solder termination: Contact plating silver	Part Number solder termination: Contact plating gold [2]	Part Number Crimp termination [1]
Female receptacle, sealing with O-Ring, termination: solder or crimp, contact plating: silver or gold, with sealing gasket.	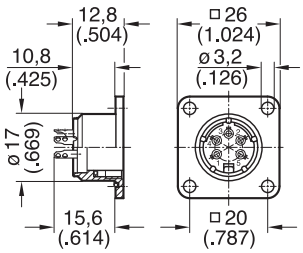	3 [3]	C091 31T003 100 2	C091 31T003 200 2	–
		4 [3]	C091 31T004 100 2	C091 31T004 200 2	–
		5	C091 31T005 100 2	–	C091 11T005 000 2
		5S [3]	C091 31T105 100 2	–	–
		6 [3]	C091 31T006 100 2	C091 31T006 200 2	–
		7	C091 31T007 100 2	C091 31T007 200 2	C091 11T007 000 2
		7 [3]	C091 31T107 100 2	–	C091 11T107 000 2
		8 [3]	C091 31T008 100 2	–	–
		12	C091 31T012 100 2	C091 31T012 200 2	–
		14	C091 31T014 100 2	C091 31T014 200 2	–

C 091 D

Male receptacle for front mounting

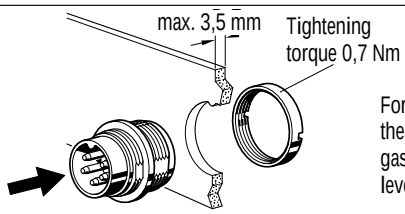

For sealing reasons the surface for the gasket needs to be level and free of burrs.

Panel Cutout

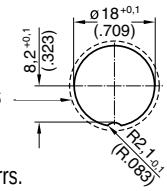

Description	Drawing	No. of cont.	Part Number solder termination: Contact plating silver	Part Number solder termination: Contact plating gold [2]	Part Number Crimp termination [1]
Male receptacle, termination: solder or crimp, contact plating: silver or gold, panel mounting with ring nut, sealing with O-Ring.	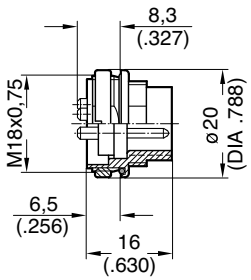	3 [3]	C091 31W003 100 2	C091 31W003 200 2	C091 11W003 000 2
		4 [3]	C091 31W004 100 2	C091 31W004 200 2	C091 11W004 000 2
		5	C091 31W005 100 2	C091 31W005 200 2	C091 11W005 000 2
		5S [3]	C091 31W105 100 2	C091 31W105 200 2	C091 11W105 000 2
		6 [3]	C091 31W006 100 2	C091 31W006 200 2	C091 11W006 000 2
		7	C091 31W007 100 2	C091 31W007 200 2	C091 11W007 000 2
		7 [3]	C091 31W107 100 2	C091 31W107 200 2	C091 11W107 000 2
		8 [3]	C091 31W008 100 2	C091 31W008 200 2	C091 11W008 000 2
		12	C091 31W012 100 2	C091 31W012 200 2	–
		14	C091 31W014 100 2	C091 31W014 200 2	–

[1] Please order crimp contacts separately, see page 43 [2] see remark page 34 [3] Contact order for DIN EN 60 130-9

C 091 D

Male receptacle for rear mounting

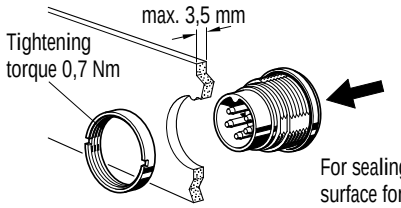

For sealing reasons the surface for the gasket needs to be level and free of burrs.

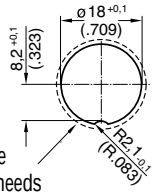

Panel Cutout

Description	Drawing	No. of cont.	Part Number solder termination: Contact plating silver	Part Number solder termination: Contact plating gold [2]	Part Number Crimp termination [1]
Male receptacle, termination: solder or crimp, contact plating: silver or gold, panel mounting with ring nut, sealing with O-Ring.	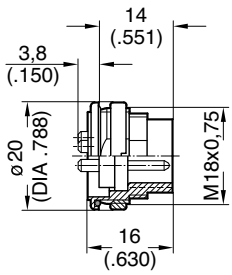	3 [3]	C091 31C003 100 2	C091 31C003 200 2	C091 11C003 000 2
		4 [3]	C091 31C004 100 2	C091 31C004 200 2	C091 11C004 000 2
		5	C091 31C005 100 2	C091 31C005 200 2	C091 11C005 000 2
		5S [3]	C091 31C105 100 2	C091 31C105 200 2	C091 11C105 000 2
		6 [3]	C091 31C006 100 2	C091 31C006 200 2	C091 11C006 000 2
		7	C091 31C007 100 2	C091 31C007 200 2	C091 11C007 000 2
		7 [3]	C091 31C107 100 2	C091 31C107 200 2	C091 11C107 000 2
		8 [3]	C091 31C008 100 2	C091 31C008 200 2	C091 11C008 000 2
		12	C091 31C012 100 2	C091 31C012 200 2	–
		14	C091 31C014 100 2	C091 31C014 200 2	–

C 091 D

Male receptacle for flange mounting

For sealing reasons the surface for the gasket needs to be level and free of burrs. Provide suitable sealing for the screws.

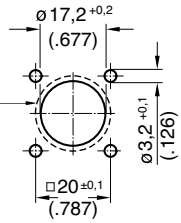

Panel Cutout

Description	Drawing	No. of cont.	Part Number solder termination: Contact plating silver	Part Number solder termination: Contact plating gold [2]	Part Number Crimp termination [1]
Male receptacle, sealing with O-Ring, termination: solder or crimp, contact plating: silver or gold, with sealing gasket.	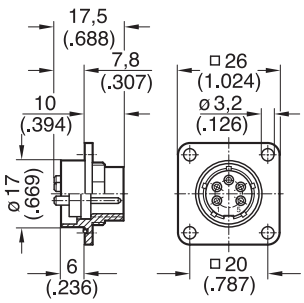	3 [3]	C091 31S003 100 2	–	C091 11S003 000 2
		4 [3]	C091 31S004 100 2	–	–
		5	C091 31S005 100 2	–	C091 11S005 000 2
		5S [3]	C091 31S105 100 2	–	–
		6 [3]	C091 31S006 100 2	C091 31S006 200 2	–
		7	C091 31S007 100 2	–	C091 11S007 000 2
		7 [3]	C091 31S107 100 2	–	C091 11S107 000 2
		8 [3]	C091 31S008 100 2	C091 31S008 200 2	–
		12	C091 31S012 100 2	C091 31S012 200 2	–
		14	C091 31S014 100 2	C091 31S014 200 2	–

[1] Please order crimp contacts separately, see page 43 [2] see remark page 34 [3] Contact order for DIN EN 60 130-9

C 091

Crimp contacts

Stamped single contacts

packaging unit 100 pcs

Stamped contacts on reel for hand crimping tools

200 pcs

Stamped contacts on reel for crimp machines

2000 pcs (feeding left or right hand side)

Type of Contact	Contact Ø	Wire Gauge	max. Insul. Ø	Supplied as	Pcs.	Part Number silver	Part Number gold
Pin contact	1.5 mm	0.09-0.25 mm²	0.7-1.6	single contact	100	VN01 015 0052 (1)	VN01 015 0052 (2)
				contacts on reel	200	ZN01 015 0052 (1)	ZN01 015 0052 (2)
				right	2000	HN01 015 0052 (1)	HN01 015 0052 (2)
				left	2000	TN01 015 0052 (1)	TN01 015 0052 (2)
		0.35-0.50 mm²	1.0-2.0	single contact	100	VN01 015 0046 (1)	VN01 015 0046 (2)
				contacts on reel	200	ZN01 015 0046 (1)	ZN01 015 0046 (2)
				right	2000	HN01 015 0046 (1)	HN01 015 0046 (2)
				left	2000	TN01 015 0046 (1)	TN01 015 0046 (2)
		0.75-1.0 mm²	1.6-2.1	single contact	100	VN01 015 0047 (1)	VN01 015 0047 (2)
				contacts on reel	200	ZN01 015 0047 (1)	ZN01 015 0047 (2)
				right	2000	HN01 015 0047 (1)	HN01 015 0047 (2)
				left	2000	TN01 015 0047 (1)	TN01 015 0047 (2)
Socket contact	1.5 mm	0.09-0.25 mm²	0.7-1.6	single contact	100	VN02 015 0052 (1)	VN02 015 0052 (2)
				contacts on reel	200	ZN02 015 0052 (1)	ZN02 015 0052 (2)
				right	2000	HN02 015 0052 (1)	HN02 015 0052 (2)
				left	2000	TN02 015 0052 (1)	TN02 015 0052 (2)
		0.35-0.50 mm²	1.0-2.0	single contact	100	VN02 015 0046 (1)	VN02 015 0046 (2)
				contacts on reel	200	ZN02 015 0046 (1)	ZN02 015 0046 (2)
				right	2000	HN02 015 0046 (1)	HN02 015 0046 (2)
				left	2000	TN02 015 0046 (1)	TN02 015 0046 (2)
		0.75-1.0 mm²	1.6-2.1	single contact	100	VN02 015 0047 (1)	VN02 015 0047 (2)
				contacts on reel	200	ZN02 015 0047(1)	ZN02 015 0047 (2)
				right	2000	HN02 015 0047 (1)	HN02 015 0047 (2)
				left	2000	TN02 015 0047 (1)	TN02 015 0047 (2)

Connecting Range mm²	Wire Gauge mm²	Wire Gauge AWG	Stripping length mm	Crimp height (average values) mm 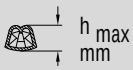 h max mm	Crimp retention force acc. DIN EN 60352-2 N
0.09-0.25	0.09	28	3.0 + 0.5	0.85-0.89	11
		26			15
	0.14			0.86-0.90	18
		24			28
	0.25			0.91-0.97	32
0.35-0.50	0.35	22	3.0 + 0.5	0.90-1.06	40
	0.50	20		0.95-1.11	60
0.75-1,00	0.75		3.5 + 1.0	1.33-1.50	85
		18			90
	1.00			1.36-1.53	108

These min. values are based on the copper wire tensile strength with $\delta_B \approx 230$ N/mm².

C 091

Accessories

Description	for Series	Drawing	Part Number
Spanner wrench for receptacles with ring nut.	C 091 A C 091 B C 091 D		N 45 091-000 1
Spanner wrench for male and female cable connectors.	C 091 A C 091 B C 091 D		FH 0300-091
Protective cover for male cable connectors and male receptacles.	C 091 A C 091 D	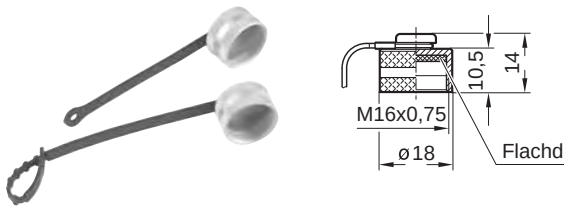	for male cable connectors C 091 00U000 120 2 L = 85 mm for male receptacles C 091 00U000 130 2 L = 60 mm C 091 00U000 131 2 L = 100 mm
Protective cover for female cable connectors and female receptacles, brass nickel plated.	C 091 A C 091 D	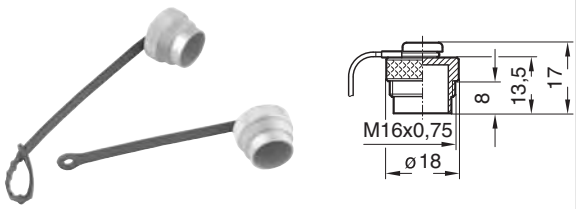	for female cable connectors C 091 00V000 120 2 L = 85 mm for female receptacles C 091 00V000 130 2 L = 60 mm C 091 00V000 131 2 L = 100 mm
Knurled ring-nut for male and female receptacles.	C 091 A C 091 D		T1336 060 9
Colored back-shells thermoplast.	C 091 A C 091 B		

Colour	Pieces	Part Number
blue	10	T 2993 510 9X
	100	T 2993 510 9C
red	10	T 2993 511 9X
	100	T 2993 511 9C
yellow	10	T 2993 512 9X
	100	T 2993 512 9C
green	10	T 2993 513 9X
	100	T 2993 513 9C

C 091

Current-Derating-Curves acc. DIN IEC 60512

The following current derating curves refer to the stated numbers of contacts and wire gauges, when all contacts are simultaneously loaded with the same current.
The maximum ambient teperature for the series C091 is 100°C.

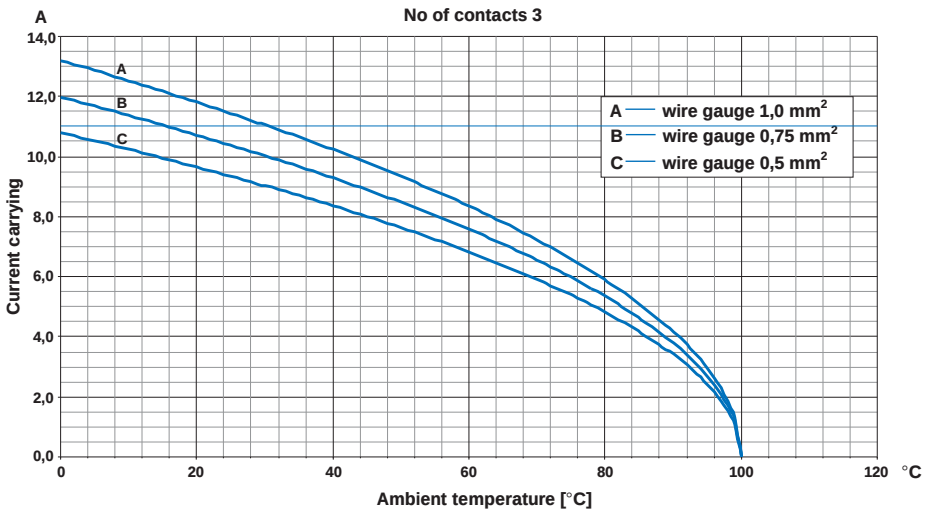

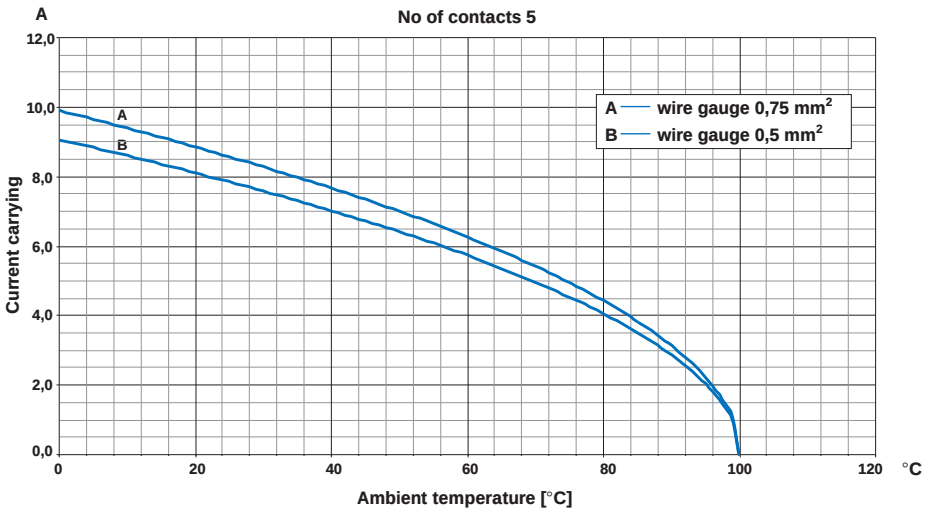

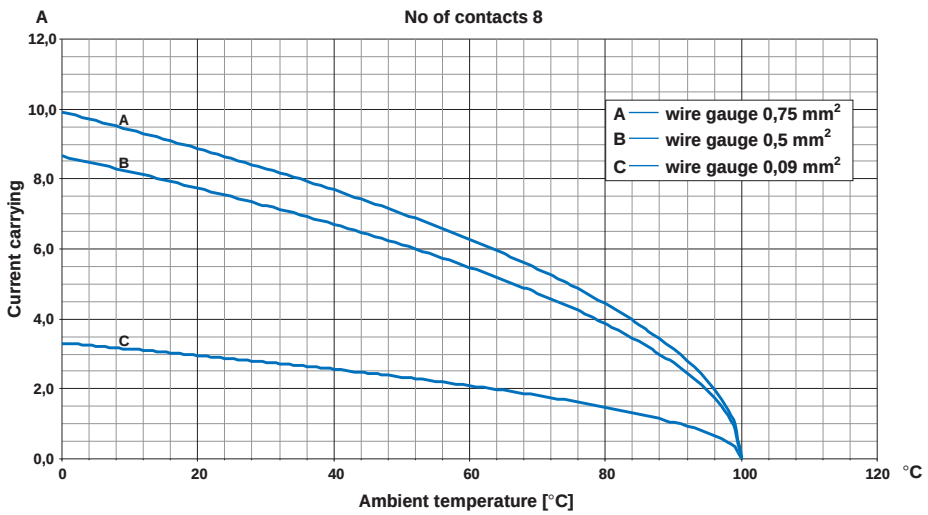

1. General Remarks

These connectors are designed and produced in conformity with the low voltage directive (73/23/EWG) respectively Gerätesicherheitsgesetz (German law) and are especially in accordance with the standards DIN EN 61984 (VDE 0627); IEC 60664-1 (VDE 0110-1) and IEC 60529.
The connectors may be used only within the technical ratings.
All technical data refer to mated connectors under live conditions. The safety of the connector system depends on the correct selection of products, proper assembly of the connector device, and a precise fit of the connectors.

2. Application Remarks

Connectors with / without breaking capacity must be used according to specified technical ratings.
The technical data represent the initial value of mated parts under predetermined conditions and length of time.These values could change with different test parameters or product requirements.
The C 091 Series connectors are used in a wide variety of industries and equipment. Some of these include industrial machines and controls, data processing, instrumentation and test equipment, medical devices, telecommunication's network and equipment, plus outdoor and marine applications.
All rated data for the connectors listed in this catalog are based on over-voltage category and pollution degree for electronic applications. Connectors were completely mated according to their respective safety locking mechanism. Selection and testing of connectors with / without breaking capacity to meet specific product or industrial requirements such as rated voltage and the related clearances and creepage distances are the responsibility of the user.

3. Assembling Remarks

Certain appliances and equipment include protective measures that relate to the coupling devices of the male and female receptacle housings.
(see also DIN VDE 0100 part 410; IEC 60364-4-41).
Care must be taken to insure the parts are correctly mated and screws are tightened with the proper torque. Protection against electrical shock on the termination side of the connector (receptacles, contact insert) shall be secured by suitable mounting.

4. Termination Remarks

The dimensions as stated in the assembly instructions are for general information only and can vary depending on cable styles and types.
Please note in the case of an internal strain relief: Always clamp the outer cable mantle (not the individual lead wires) to avoid damage of the lead wire insulation. In case of shielded cables, fold the braid over the outer mantle to avoid damage of the lead wire insulation when clamping the braid.
In case of clamping rings, make sure that the lead wire insulation is not damaged when connecting (clamping) the braid.
Cable connectors are effectively secured when using the internal cable clamp. When the connector contains a simple gland bushing for retention the cable should have a strain relief close behind the connector. All cable properties or specifications must be compatible with the connector design and materials.
Designated wire conductors must be terminated to the correct poles in the connector. Please make sure that the usability of the cable in conjunction with the clamping ring is given.
Crimp contacts must be fully inserted into the plastic housing and retention assured with a slight tug on the wire.
Wire should be stripped correctly according to printed specifications to ensure no electrical contact can be made between the conductors. There should be no nicked or cut strains during the stripping action.

5. Classification according to DIN EN 61984 / IEC 61984 (VDE 0627)

Style	*enclosed*	*unenclosed*	*protective earthing contact*	*cable clamp*	*finger safety mated*	*finger safety unmated*	*hand back safety mated*	*Connetor with breaking capacity* [1]	*rewirable*	*Cable clamp*	
										with	*without*
Male cable connector		X		X	X				X	X	
Female cable connector	X			X	X	X	X		X	X	
Male panel connector					X[1]				X		X
Female panel connector		X			X[1]	X[1]	X[1]		X		X

[1] Protection against electrical shock on the termination side has to be secured by proper mounting.

Degree of protection

Electrical devices to which connectors belong have to be protected for safety reasons from outside influences like dust, foreign objects, direct contact, moisture and water. This protection is provided on industrial connectors by their housings with their latching devices and sealed cable entries.
The degree of protection can be selected depending on the type of intended use. The standard IEC 60529 and/or DIN EN 60529 has specified the degree of protection and divided into several classes.

The degree of protection is indicated in the following way:

IP 65

Code letters (Ingress Protection)
1st charact. numeral (degree of protection against access to hazardous parts and against solid foreign objects)
2nd charact. numeral (degree of protection against ingress of water)
The following charts give an overview about all protection degrees.

1st charact. numeral	Brief description	Definition
0	Non-protected	–
1	Protected against access to hazardous parts with the back of a hand. Protected against solid foreign objects of ≥50mm Ø.	The probe, sphere of 50mm Ø, shall not fully penetrate and shall have adequate clearance from hazardous parts.
2	Protected against access to hazardous parts with a finger. Protected against solid foreign objects of ≥12.5mm Ø.	The jointed test finger of 12mm Ø, 80mm length, shall have adequate clearance from hazardous parts. The probe, sphere of 12.5mm Ø, shall not fully penetrate.
3	Protected against access to hazardous parts with a tool. Protected against solid foreign objects of ≥2.5mm Ø.	The probe of 2.5mm Ø shall not penetrate at all.
4	Protected against access to hazardous parts with a wire.Protected against solid foreign objects of ≥1mm Ø.	The probe of 1mm Ø shall not penetrate at all.
5	Protected against access to hazardous parts with a wire. Dust-protected.	The probe of 1mm Ø shall not penetrate. Intrusion of dust is not totally prevented, but dust shall not penetrate in a quantity to interfere with satisfactory operation of the device or to impair safety.
6	Protected against access to hazardous parts with a wire. Dust-tight.	The probe of 1mm Ø shall not penetrate. No intrussion of dust.

2nd charact. numeral	Brief description	Definition
0	Non-protected	–
1	Protected against vertically falling water drops	Vertically falling drops shall have no harmful effects.
2	Protected against vertically falling water drops when enclosure tilted up to 15°	Vertically falling drops shall have no harmful effects when the enclosure is tilted at any angle up to 15° on either side of the vertical.
3	Protected against spraying water	Water sprayed at an angle up to 60° on either side of the vertical shall have no harmful effects.
4	Protected against splashing water	Water splashed against the enclosure from any direction shall have no harmful effects.
5	Protected against water jets	Water projected in jets against the enclosure from any direction shall have no harmful effects.
6	Protected against powerful water jets	Water projected in powerful jets against the enclosure from any direction shall have no harmful effects.
7	Protected against the effects of temporary immersion in water	Intrusion of water in quantities causing harmful effects shall not be possible when the enclosure is temporally immersed in water for 30 min. in 1m depth.
8	Protected against the effects of continous immersion in water	Intrusion of water in quantities causing harmful effects shall not be possible when the enclosure is continuously immersed in water under conditions which shall be agreed between manufacturer and user but which are more severe than for numeral 7.
9 K [1)]	Protected against water during high pressure/steam jet cleaning	Water projected in powerful jets with high pressure against the enclosure from any direction shall have no harmful effects.

1) Remark: Numeral acc. to DIN 40050 part 9, vehicles IP code

C 091

Summary of Part Numbers

Part Number	Page	Part Number	Page	Part Number	Page	Part Number	Page	Part Number	Page	Part Number	Page
C091 11C003 000 2	42	C091 11K007 000 2	37	C091 31D014 200 2	36	C091 31K003 101 2	37	C091 31W007 200 2	41	C 091 00V000 131 2	44
C091 11C004 000 2	42	C091 11K007 001 2	37	C091 31D014 201 2	36	C091 31K004 100 2	37	C091 31W008 100 2	41	FH 0300-091	44
C091 11C005 000 2	42	C091 11K008 000 2	37	C091 31D105 100 2	36	C091 31K004 101 2	37	C091 31W008 200 2	41	HN01 015 0046 (1)	43
C091 11C006 000 2	42	C091 11K008 001 2	37	C091 31D105 101 2	36	C091 31K005 100 2	37	C091 31W012 100 2	41	HN01 015 0046 (2)	43
C091 11C007 000 2	42	C091 11K105 000 2	37	C091 31D107 100 2	36	C091 31K005 101 2	37	C091 31W012 200 2	41	HN01 015 0047 (1)	43
C091 11C008 000 2	42	C091 11K105 001 2	37	C091 31D107 101 2	36	C091 31K006 100 2	37	C091 31W014 100 2	41	HN01 015 0047 (2)	43
C091 11C105 000 2	42	C091 11K107 000 2	37	C091 31F003 100 2	38	C091 31K006 101 2	37	C091 31W014 200 2	41	HN01 015 0052 (1)	42
C091 11C107 000 2	42	C091 11K107 001 2	37	C091 31F003 101 2	38	C091 31K007 100 2	37	C091 31W105 100 2	41	HN01 015 0052 (2)	43
C091 11D003 000 2	36	C091 11N003 000 2	39	C091 31F004 100 2	38	C091 31K007 101 2	37	C091 31W105 200 2	41	HN02 015 0046 (1)	43
C091 11D003 001 2	36	C091 11N004 000 2	39	C091 31F004 101 2	38	C091 31K008 100 2	37	C091 31W107 100 2	41	HN02 015 0046 (2)	43
C091 11D004 000 2	36	C091 11N005 000 2	39	C091 31F005 100 2	38	C091 31K008 101 2	37	C091 31W107 200 2	41	HN02 015 0047 (1)	43
C091 11D004 001 2	36	C091 11N006 000 2	39	C091 31F005 101 2	38	C091 31K012 100 2	37	C091 31 H012 101 2	35	HN02 015 0047 (2)	43
C091 11D005 000 2	36	C091 11N007 000 2	39	C091 31F006 100 2	38	C091 31K012 101 2	37	C091 61G003 110 2	40	HN02 015 0052 (1)	43
C091 11D005 001 2	36	C091 11N008 000 2	39	C091 31F006 101 2	38	C091 31K014 100 2	37	C091 61G003 120 2	40	HN02 015 0052 (2)	43
C091 11D006 000 2	36	C091 11N105 000 2	39	C091 31F007 100 2	38	C091 31K014 101 2	37	C091 61G003 130 2	40	N 45 091-000 1	44
C091 11D006 001 2	36	C091 11N107 000 2	39	C091 31F007 101 2	38	C091 31K105 100 2	37	C091 61G004 110 2	40	T1336 060 9	44
C091 11D007 000 2	36	C091 11S003 000 2	42	C091 31F008 100 2	38	C091 31K105 101 2	37	C091 61G004 120 2	40	TN01 015 0046 (1)	43
C091 11D007 001 2	36	C091 11S005 000 2	42	C091 31F008 101 2	38	C091 31K107 100 2	37	C091 61G004 130 2	40	TN01 015 0046 (2)	43
C091 11D008 000 2	36	C091 11S007 000 2	42	C091 31F012 100 2	38	C091 31K107 101 2	37	C091 61G005 110 2	40	TN01 015 0047 (1)	43
C091 11D008 001 2	36	C091 11S107 000 2	42	C091 31F012 101 2	38	C091 31N003 100 2	39	C091 61G005 120 2	40	TN01 015 0047 (2)	43
C091 11D105 000 2	36	C091 11T005 000 2	41	C091 31F014 100 2	38	C091 31N004 100 2	39	C091 61G005 130 2	40	TN01 015 0052 (1)	43
C091 11D105 001 2	36	C091 11T007 000 2	41	C091 31F014 101 2	38	C091 31N005 100 2	39	C091 61G006 110 2	40	TN01 015 0052 (2)	43
C091 11D107 000 2	36	C091 11T107 000 2	41	C091 31F105 100 2	38	C091 31N005 200 2	39	C091 61G006 120 2	40	TN02 015 0046 (1)	43
C091 11D107 001 2	36	C091 11W003 000 2	41	C091 31F105 101 2	38	C091 31N006 100 2	39	C091 61G006 130 2	40	TN02 015 0046 (2)	43
C091 11F003 000 2	38	C091 11W004 000 2	41	C091 31F107 100 2	38	C091 31N007 100 2	39	C091 61G006 210 2	40	TN02 015 0047 (1)	43
C091 11F003 001 2	38	C091 11W005 000 2	41	C091 31F107 101 2	38	C091 31N008 100 2	39	C091 61G007 110 2	40	TN02 015 0047 (2)	43
C091 11F004 000 2	38	C091 11W006 000 2	41	C091 31G003 100 2	40	C091 31N008 200 2	39	C091 61G007 120 2	40	TN02 015 0052 (1)	43
C091 11F004 001 2	38	C091 11W007 000 2	41	C091 31G004 100 2	40	C091 31N012 100 2	39	C091 61G007 130 2	40	TN02 015 0052 (2)	43
C091 11F005 000 2	38	C091 11W008 000 2	41	C091 31G004 200 2	40	C091 31N012 200 2	39	C091 61G008 110 2	40	T 2993 510 9C	44
C091 11F005 001 2	38	C091 11W105 000 2	41	C091 31G005 100 2	40	C091 31N014 100 2	39	C091 61G008 120 2	40	T 2993 510 9X	44
C091 11F006 000 2	38	C091 11W107 000 2	41	C091 31G005 200 2	40	C091 31N014 200 2	39	C091 61G008 130 2	40	T 2993 511 9C	44
C091 11F006 001 2	38	C091 31C003 100 2	42	C091 31G006 100 2	40	C091 31N105 100 2	39	C091 61G012 110 2	40	T 2993 511 9X	44
C091 11F007 000 2	38	C091 31C003 200 2	42	C091 31G007 100 2	40	C091 31N107 100 2	39	C091 61G012 210 2	40	T 2993 512 9C	44
C091 11F007 001 2	38	C091 31C004 100 2	42	C091 31G007 200 2	40	C091 31S003 100 2	42	C091 61G014 110 2	40	T 2993 512 9X	44
C091 11F008 000 2	38	C091 31C004 200 2	42	C091 31G008 100 2	40	C091 31S004 100 2	42	C091 61G014 210 2	40	T 2993 513 9C	44
C091 11F008 001 2	38	C091 31C005 100 2	42	C091 31G008 200 2	40	C091 31S005 100 2	42	C091 61G105 110 2	40	T 2993 513 9X	44
C091 11F105 000 2	38	C091 31C005 200 2	42	C091 31G012 100 2	40	C091 31S006 100 2	42	C091 61G105 120 2	40	T 3200 001	7
C091 11F105 001 2	38	C091 31C006 100 2	42	C091 31G012 200 2	40	C091 31S006 200 2	42	C091 61G105 130 2	40	T 3200 002	7
C091 11F107 000 2	38	C091 31C006 200 2	42	C091 31G014 100 2	40	C091 31S007 100 2	42	C091 61G107 110 2	40	T 3200 004	7
C091 11F107 001 2	38	C091 31C007 100 2	42	C091 31G014 200 2	40	C091 31S008 100 2	42	C091 61G107 120 2	40	T 3200 005	8
C091 11G003 000 2	40	C091 31C007 200 2	42	C091 31G105 100 2	40	C091 31S008 200 2	42	C091 61G107 130 2	40	T 3200 013	7
C091 11G004 000 2	40	C091 31C008 100 2	42	C091 31G107 100 2	40	C091 31S012 100 2	42	C091 61N003 110 2	39	T 3200 018	7
C091 11G005 000 2	40	C091 31C008 200 2	42	C091 31H003 100 2	35	C091 31S012 200 2	42	C091 61N003 120 2	39	T 3200 028	7
C091 11G006 000 2	40	C091 31C012 100 2	42	C091 31H003 101 2	35	C091 31S014 100 2	42	C091 61N003 130 2	39	T 3200 048	7
C091 11G007 000 2	40	C091 31C012 200 2	42	C091 31H004 100 2	35	C091 31S014 200 2	42	C091 61N004 110 2	39	T 3201 001	9
C091 11G008 000 2	40	C091 31C014 100 2	42	C091 31H004 101 2	35	C091 31S105 100 2	42	C091 61N004 120 2	39	T 3201 002	9
C091 11G105 000 2	40	C091 31C014 200 2	42	C091 31H005 100 2	35	C091 31S107 100 2	42	C091 61N004 130 2	39	T 3201 005	10
C091 11G107 000 2	40	C091 31C105 100 2	42	C091 31H005 101 2	35	C091 31T003 100 2	41	C091 61N005 110 2	39	T 3201 013	9
C091 11H003 000 2	35	C091 31C105 200 2	42	C091 31H005 200 2	35	C091 31T003 200 2	41	C091 61N005 120 2	39	T 3201 018	9
C091 11H003 001 2	35	C091 31C107 100 2	42	C091 31H006 100 2	35	C091 31T004 100 2	41	C091 61N005 130 2	39	T 3201 028	9
C091 11H004 000 2	35	C091 31C107 200 2	42	C091 31H006 101 2	35	C091 31T004 200 2	41	C091 61N006 110 2	39	T 3202 000	15
C091 11H004 001 2	35	C091 31D003 100 2	36	C091 31H006 200 2	35	C091 31T005 100 2	41	C091 61N006 120 2	39	T 3202 009	15
C091 11H005 000 2	35	C091 31D003 101 2	36	C091 31H007 100 2	35	C091 31T006 100 2	41	C091 61N006 130 2	39	T 3202 018	15
C091 11H005 001 2	35	C091 31D004 100 2	36	C091 31H007 101 2	35	C091 31T006 200 2	41	C091 61N007 110 2	39	T 3202 100	16
C091 11H006 000 2	35	C091 31D004 101 2	36	C091 31H007 201 2	35	C091 31T007 100 2	41	C091 61N007 120 2	39	T 3203 000	11
C091 11H006 001 2	35	C091 31D005 100 2	36	C091 31H008 100 2	35	C091 31T007 200 2	41	C091 61N007 130 2	39	T 3203 009	11
C091 11H007 000 2	35	C091 31D005 101 2	36	C091 31H008 101 2	35	C091 31T008 100 2	41	C091 61N008 110 2	39	T 3203 018	11
C091 11H007 001 2	35	C091 31D005 200 2	36	C091 31H008 200 2	35	C091 31T012 100 2	41	C091 61N008 120 2	39	T 3203 100	12
C091 11H008 000 2	35	C091 31D006 100 2	36	C091 31H008 201 2	35	C091 31T012 200 2	41	C091 61N008 130 2	39	T 3203 109	12
C091 11H008 001 2	35	C091 31D006 101 2	36	C091 31H012 100 2	35	C091 31T014 100 2	41	C091 61N012 210 2	39	T 3203 400	12
C091 11H105 000 2	35	C091 31D006 200 2	36	C091 31H012 200 2	35	C091 31T014 200 2	41	C091 61N014 210 2	39	T 3260 001	7
C091 11H105 001 2	35	C091 31D007 100 2	36	C091 31H012 201 2	35	C091 31T105 100 2	41	C091 61N105 110 2	39	T 3260 002	7
C091 11H107 000 2	35	C091 31D007 101 2	36	C091 31H014 100 2	35	C091 31T107 100 2	41	C091 61N105 120 2	39	T 3260 004	7
C091 11H107 001 2	35	C091 31D007 201 2	36	C091 31H014 200 2	35	C091 31W003 100 2	41	C091 61N105 130 2	39	T 3260 005	8
C091 11K003 000 2	37	C091 31D008 100 2	36	C091 31H014 201 2	35	C091 31W003 200 2	41	C091 61N107 110 2	39	T 3260 013	7
C091 11K003 001 2	37	C091 31D008 101 2	36	C091 31H105 100 2	35	C091 31W004 100 2	41	C091 61N107 120 2	39	T 3260 018	7
C091 11K004 000 2	37	C091 31D008 200 2	36	C091 31H105 101 2	35	C091 31W004 200 2	41	C091 61N107 130 2	39	T 3260 028	7
C091 11K004 001 2	37	C091 31D008 201 2	36	C091 31H105 200 2	35	C091 31W005 100 2	41	C 091 00U000 120 2	44	T 3260 048	7
C091 11K005 000 2	37	C091 31D012 100 2	36	C091 31H107 100 2	35	C091 31W005 200 2	41	C 091 00U000 130 2	44	T 3260 055	8
C091 11K005 001 2	37	C091 31D012 200 2	36	C091 31H107 101 2	35	C091 31W006 100 2	41	C 091 00U000 131 2	44	T 3260 058	8
C091 11K006 000 2	37	C091 31D012 201 2	36	C091 31H107 200 2	35	C091 31W006 200 2	41	C 091 00V000 120 2	44	T 3260 551	7
C091 11K006 001 2	37	C091 31D014 100 2	36	C091 31K003 100 2	37	C091 31W007 100 2	41	C 091 00V000 130 2	44	T 3260 552	7

Summary of Part Numbers

Part Number	Page	Part Number	Page	Part Number	Page	Part Number	Page	Part Number	Page	Part Number	Page
T 3260 554	7	T 3276 518	32	T 3303 118	12	T 3356 004	7	T 3361 551	9	T 3377 518	30
T 3261 001	9	T 3276 550	32	T 3303 150	12	T 3356 005	8	T 3361 552	9	T 3377 550	30
T 3261 002	9	T 3277 000	30	T 3303 300	11	T 3356 018	7	T 3361 554	9	T 3377 600	31
T 3261 004	9	T 3277 018	30	T 3303 320	11	T 3356 028	7	T 3362 000	15	T 3378 501	27
T 3261 005	10	T 3277 050	30	T 3303 330	11	T 3356 048	7	T 3362 009	15	T 3378 502	27
T 3261 013	9	T 3277 100	30	T 3303 400	12	T 3356 055	8	T 3362 010	15	T 3378 504	27
T 3261 018	9	T 3277 150	30	T 3303 420	12	T 3356 058	8	T 3362 018	15	T 3378 518	27
T 3261 028	9	T 3277 500	30	T 3303 430	12	T 3356 551	7	T 3362 100	16	T 3378 528	27
T 3261 048	9	T 3277 518	30	T 3303 434	12	T 3356 552	7	T 3362 150	16	T 3378 548	27
T 3261 055	10	T 3277 550	30	T 3303 550	11	T 3356 554	7	T 3362 300	15	T 3378 551	27
T 3261 058	10	T 3277 600	31	T 3321 500	30	T 3357 004	9	T 3362 400	16	T 3378 552	27
T 3261 551	9	T 3277 900	31	T 3321 518	30	T 3357 005	10	T 3362 420	16	T 3378 554	27
T 3261 552	9	T 3278 501	27	T 3321 550	30	T 3357 018	9	T 3362 430	16	T 3378 951	29
T 3261 554	9	T 3278 502	7	T 3324 005	21	T 3357 028	9	T 3362 550	15	T 3378 991	29
T 3262 000	15	T 3278 504	27	T 3324 055	21	T 3357 048	9	T 3363 ...	13	T 3379 501	23
T 3262 009	15	T 3278 518	27	T 3324 058	21	T 3357 055	10	T 3363 000	11	T 3379 502	23
T 3262 018	15	T 3278 528	27	T 3324 501	21	T 3357 058	10	T 3363 009	11	T 3379 504	23
T 3262 100	16	T 3278 548	27	T 3324 502	21	T 3357 551	9	T 3363 010	11	T 3379 518	23
T 3262 150	16	T 3278 551	27	T 3324 504	21	T 3357 552	9	T 3363 018	11	T 3379 528	23
T 3262 300	15	T 3278 552	27	T 3324 518	21	T 3357 554	9	T 3363 100	12	T 3379 548	23
T 3262 400	16	T 3278 554	27	T 3324 528	21	T 3358 009	15	T 3363 109	12	T 3379 551	23
T 3262 420	16	T 3278 951	29	T 3324 548	21	T 3358 018	15	T 3363 118	12	T 3379 552	23
T 3262 430	16	T 3279 501	23	T 3324 551	21	T 3358 100	16	T 3363 150	12	T 3379 554	23
T 3262 550	15	T 3279 502	23	T 3324 552	21	T 3358 150	16	T 3363 300	11	T 3391 500	30
T 3263 000	11	T 3279 504	23	T 3324 554	21	T 3358 300	15	T 3363 320	11	T 3391 518	30
T 3263 009	11	T 3279 518	23	T 3324 951	29	T 3358 400	16	T 3363 330	11	T 3391 550	30
T 3263 018	11	T 3279 528	23	T 3324 991	29	T 3358 420	16	T 3363 400	12	T 3394 005	21
T 3263 100	12	T 3279 548	23	T 3325 005	25	T 3358 430	16	T 3363 404	12	T 3394 055	21
T 3263 109	12	T 3279 551	23	T 3325 055	25	T 3358 550	15	T 3363 420	12	T 3394 058	21
T 3263 118	12	T 3279 552	23	T 3325 058	25	T 3359 009	11	T 3363 430	12	T 3394 501	21
T 3263 150	12	T 3279 554	23	T 3325 501	25	T 3359 018	11	T 3363 434	12	T 3394 502	21
T 3263 300	11	T 3300 001	7	T 3325 502	25	T 3359 100	12	T 3363 550	11	T 3394 504	21
T 3263 320	11	T 3300 002	7	T 3325 504	25	T 3359 109	12	T 3363 902	13	T 3394 518	21
T 3263 330	11	T 3300 004	7	T 3325 518	25	T 3359 118	12	T 3371 500	30	T 3394 528	21
T 3263 400	12	T 3300 005	8	T 3325 528	25	T 3359 150	12	T 3371 518	30	T 3394 548	21
T 3263 420	12	T 3300 013	7	T 3325 548	25	T 3359 300	11	T 3371 550	30	T 3394 551	21
T 3263 430	12	T 3300 018	7	T 3325 551	25	T 3359 320	11	T 3374 005	21	T 3394 552	21
T 3263 434	12	T 3300 028	7	T 3325 552	25	T 3359 330	11	T 3374 058	21	T 3394 554	21
T 3263 550	11	T 3300 048	7	T 3325 554	25	T 3359 400	12	T 3374 501	21	T 3394 991	29
T 3263 900	14	T 3300 055	8	T 3325 951	29	T 3359 420	12	T 3374 502	21	T 3394 998	29
T 3271 500	30	T 3300 058	8	T 3325 991	29	T 3359 430	12	T 3374 504	21	T 3395 005	25
T 3271 518	30	T 3300 551	7	T 3326 500	32	T 3359 550	11	T 3374 518	21	T 3395 055	25
T 3271 550	30	T 3300 552	7	T 3326 518	32	T 3359 900	14	T 3374 528	21	T 3395 058	25
T 3274 005	21	T 3300 554	7	T 3326 550	32	T 3360 001	7	T 3374 548	21	T 3395 501	25
T 3274 055	21	T 3301 001	9	T 3327 000	30	T 3360 002	7	T 3374 551	21	T 3395 502	25
T 3274 058	21	T 3301 002	9	T 3327 018	30	T 3360 004	7	T 3374 552	21	T 3395 504	25
T 3274 501	21	T 3301 004	9	T 3327 050	30	T 3360 005	8	T 3374 554	21	T 3395 518	25
T 3274 502	21	T 3301 005	10	T 3327 100	30	T 3360 010	7	T 3374 951	29	T 3395 528	25
T 3274 504	21	T 3301 013	9	T 3327 150	30	T 3360 013	7	T 3374 991	29	T 3395 548	25
T 3274 518	21	T 3301 018	9	T 3327 500	30	T 3360 018	7	T 3375 005	25	T 3395 551	25
T 3274 528	21	T 3301 028	9	T 3327 518	30	T 3360 020	7	T 3375 055	25	T 3395 552	25
T 3274 548	21	T 3301 048	9	T 3327 550	30	T 3360 028	7	T 3375 058	25	T 3395 554	25
T 3274 551	21	T 3301 055	10	T 3328 501	27	T 3360 048	7	T 3375 501	25	T 3396 500	32
T 3274 552	21	T 3301 058	10	T 3328 502	27	T 3360 055	8	T 3375 502	25	T 3396 518	32
T 3274 554	21	T 3301 551	9	T 3328 504	27	T 3360 058	8	T 3375 504	25	T 3396 550	32
T 3274 951	29	T 3301 552	9	T 3328 518	27	T 3360 130	7	T 3375 518	25	T 3397 100	30
T 3274 991	29	T 3301 554	9	T 3328 528	27	T 3360 551	7	T 3375 528	25	T 3397 150	30
T 3275 005	25	T 3302 000	15	T 3328 548	27	T 3360 552	7	T 3375 548	25	T 3397 500	30
T 3275 055	25	T 3302 009	15	T 3328 551	27	T 3360 554	7	T 3375 551	25	T 3397 518	30
T 3275 058	25	T 3302 018	15	T 3328 552	27	T 3361 001	9	T 3375 552	25	T 3397 550	30
T 3275 501	25	T 3302 100	16	T 3328 554	27	T 3361 002	9	T 3375 554	25	T 3397 600	31
T 3275 502	25	T 3302 150	16	T 3328 951	29	T 3361 004	9	T 3375 951	29	T 3397 900	31
T 3275 504	25	T 3302 300	15	T 3328 991	29	T 3361 005	10	T 3375 991	29	T 3398 501	27
T 3275 518	25	T 3302 400	16	T 3329 501	23	T 3361 010	9	T 3376 500	32	T 3398 502	27
T 3275 528	25	T 3302 420	16	T 3329 502	23	T 3361 013	9	T 3376 518	32	T 3398 504	27
T 3275 548	25	T 3302 430	16	T 3329 504	23	T 3361 018	9	T 3376 550	32	T 3398 518	27
T 3275 551	25	T 3302 550	15	T 3329 518	23	T 3361 020	9	T 3377 000	30	T 3398 528	27
T 3275 552	25	T 3303 000	11	T 3329 528	23	T 3361 028	9	T 3377 018	30	T 3398 548	27
T 3275 554	25	T 3303 009	11	T 3329 548	23	T 3361 048	9	T 3377 050	30	T 3398 551	27
T 3275 951	29	T 3303 018	11	T 3329 551	23	T 3361 055	10	T 3377 100	30	T 3398 552	27
T 3275 991	29	T 3303 100	12	T 3329 552	23	T 3361 058	10	T 3377 150	30	T 3398 554	27
T 3276 500	32	T 3303 109	12	T 3329 554	23	T 3361 130	9	T 3377 500	30	T 3399 501	23

Summary of Part Numbers

Part Number	Page	Part Number	Page	Part Number	Page	Part Number	Page	Part Number	Page	Part Number	Page
T 3399 502	23	T 3424 528	21	T 3435 055	25	T 3446 518	32	T 3478 320	11	T 3505 001	9
T 3399 504	23	T 3424 548	21	T 3435 058	25	T 3446 550	32	T 3478 330	11	T 3505 002	9
T 3399 518	23	T 3424 551	21	T 3435 501	25	T 3447 100	30	T 3478 400	12	T 3505 004	9
T 3399 528	23	T 3424 552	21	T 3435 502	25	T 3447 150	30	T 3478 404	12	T 3505 005	10
T 3399 548	23	T 3424 554	21	T 3435 504	25	T 3447 500	30	T 3478 420	12	T 3505 013	9
T 3399 551	23	T 3424 951	29	T 3435 518	25	T 3447 518	30	T 3478 430	12	T 3505 018	9
T 3399 552	23	T 3424 991	29	T 3435 528	25	T 3447 550	30	T 3478 434	12	T 3505 028	9
T 3399 554	23	T 3424 998	29	T 3435 548	25	T 3447 900	31	T 3478 550	11	T 3505 048	9
T 3400 001	7	T 3425 005	25	T 3435 551	25	T 3448 501	27	T 3484 001	7	T 3505 055	10
T 3400 002	7	T 3425 055	25	T 3435 552	25	T 3448 502	27	T 3484 002	7	T 3505 058	10
T 3400 004	7	T 3425 058	25	T 3435 554	25	T 3448 504	27	T 3484 004	7	T 3505 551	9
T 3400 005	8	T 3425 501	25	T 3435 951	29	T 3448 518	27	T 3484 005	8	T 3505 552	9
T 3400 013	7	T 3425 502	25	T 3435 991	29	T 3448 528	27	T 3484 013	7	T 3505 554	9
T 3400 018	7	T 3425 504	25	T 3436 500	32	T 3448 548	27	T 3484 018	7	T 3506 000	15
T 3400 028	7	T 3425 518	25	T 3436 518	32	T 3448 551	27	T 3484 028	7	T 3506 009	15
T 3400 038	7	T 3425 528	25	T 3436 550	32	T 3448 552	27	T 3484 048	7	T 3506 018	15
T 3400 048	7	T 3425 548	25	T 3437 000	30	T 3448 554	27	T 3484 055	8	T 3506 100	16
T 3400 055	8	T 3425 551	25	T 3437 018	30	T 3449 501	23	T 3484 058	8	T 3506 150	16
T 3400 058	8	T 3425 552	25	T 3437 050	30	T 3449 502	23	T 3484 551	7	T 3506 300	15
T 3400 551	7	T 3425 554	25	T 3437 100	30	T 3449 504	23	T 3484 552	7	T 3506 400	16
T 3400 552	7	T 3425 951	29	T 3437 150	30	T 3449 518	23	T 3484 554	7	T 3506 420	16
T 3400 554	7	T 3425 991	29	T 3437 500	30	T 3449 528	23	T 3485 001	9	T 3506 430	16
T 3401 001	9	T 3426 500	32	T 3437 518	30	T 3449 548	23	T 3485 002	9	T 3506 550	15
T 3401 002	9	T 3426 518	32	T 3437 550	30	T 3449 551	23	T 3485 004	9	T 3507 000	11
T 3401 004	9	T 3426 550	32	T 3438 501	27	T 3449 552	23	T 3485 005	10	T 3507 009	11
T 3401 005	10	T 3427 000	30	T 3438 502	27	T 3449 554	23	T 3485 013	9	T 3507 018	11
T 3401 013	9	T 3427 018	30	T 3438 504	27	T 3475 001	7	T 3485 018	9	T 3507 100	12
T 3401 018	9	T 3427 050	30	T 3438 518	27	T 3475 002	7	T 3485 028	9	T 3507 109	12
T 3401 028	9	T 3427 100	30	T 3438 528	27	T 3475 004	7	T 3485 048	9	T 3507 118	12
T 3401 048	9	T 3427 150	30	T 3438 548	27	T 3475 005	8	T 3485 055	10	T 3507 150	12
T 3401 055	10	T 3427 500	30	T 3438 551	27	T 3475 013	7	T 3485 058	10	T 3507 300	11
T 3401 058	10	T 3427 518	30	T 3438 552	27	T 3475 018	7	T 3485 551	9	T 3507 320	11
T 3401 551	9	T 3427 550	30	T 3438 554	27	T 3475 028	7	T 3485 552	9	T 3507 330	11
T 3401 552	9	T 3427 600	31	T 3438 951	29	T 3475 038	7	T 3485 554	9	T 3507 400	12
T 3401 554	9	T 3428 501	27	T 3438 991	29	T 3475 048	7	T 3486 000	15	T 3507 404	12
T 3402 000	15	T 3428 502	27	T 3439 501	23	T 3475 055	8	T 3486 009	15	T 3507 420	12
T 3402 009	15	T 3428 504	27	T 3439 502	23	T 3475 058	8	T 3486 018	15	T 3507 430	12
T 3402 018	15	T 3428 518	27	T 3439 504	23	T 3475 551	7	T 3486 100	16	T 3507 550	11
T 3402 100	16	T 3428 528	27	T 3439 518	23	T 3475 552	7	T 3486 150	16	T 3507 900	14
T 3402 150	16	T 3428 548	27	T 3439 528	23	T 3475 554	7	T 3486 300	15	T 3521 500	30
T 3402 300	15	T 3428 551	27	T 3439 548	23	T 3476 001	9	T 3486 400	16	T 3521 518	30
T 3402 400	16	T 3428 552	27	T 3439 551	23	T 3476 002	9	T 3486 420	16	T 3521 550	30
T 3402 420	16	T 3428 554	27	T 3439 552	23	T 3476 004	9	T 3486 430	16	T 3524 055	21
T 3402 430	16	T 3428 951	29	T 3439 554	23	T 3476 005	10	T 3486 550	15	T 3524 058	21
T 3402 550	15	T 3428 991	29	T 3441 500	30	T 3476 013	9	T 3487 000	11	T 3524 501	21
T 3403 ...	13	T 3429 501	23	T 3441 518	30	T 3476 018	9	T 3487 009	11	T 3524 502	21
T 3403 000	11	T 3429 502	23	T 3441 550	30	T 3476 028	9	T 3487 018	11	T 3524 504	21
T 3403 009	11	T 3429 504	23	T 3444 005	21	T 3476 038	9	T 3487 100	12	T 3524 518	21
T 3403 018	11	T 3429 518	23	T 3444 055	21	T 3476 048	9	T 3487 109	12	T 3524 528	21
T 3403 100	12	T 3429 528	23	T 3444 058	21	T 3476 055	10	T 3487 118	12	T 3524 548	21
T 3403 109	12	T 3429 548	23	T 3444 501	21	T 3476 058	10	T 3487 150	12	T 3524 551	21
T 3403 118	12	T 3429 551	23	T 3444 502	21	T 3476 551	9	T 3487 300	11	T 3524 552	21
T 3403 150	12	T 3429 552	23	T 3444 504	21	T 3476 552	9	T 3487 320	11	T 3524 554	21
T 3403 300	11	T 3429 554	23	T 3444 518	21	T 3476 554	9	T 3487 330	11	T 3524 951	29
T 3403 320	11	T 3431 500	30	T 3444 528	21	T 3477 000	15	T 3487 400	12	T 3525 055	25
T 3403 330	11	T 3431 518	30	T 3444 548	21	T 3477 009	15	T 3487 420	12	T 3525 058	25
T 3403 400	12	T 3431 550	30	T 3444 551	21	T 3477 018	15	T 3487 430	12	T 3525 501	25
T 3403 420	12	T 3434 005	21	T 3444 552	21	T 3477 100	16	T 3487 550	11	T 3525 502	25
T 3403 430	12	T 3434 055	21	T 3444 554	21	T 3477 150	16	T 3487 900	14	T 3525 504	25
T 3403 434	12	T 3434 058	21	T 3445 005	25	T 3477 300	15	T 3504 001	7	T 3525 518	25
T 3403 550	11	T 3434 501	21	T 3445 055	25	T 3477 400	16	T 3504 002	7	T 3525 528	25
T 3403 902	13	T 3434 502	21	T 3445 058	25	T 3477 420	16	T 3504 004	7	T 3525 548	25
T 3421 500	30	T 3434 504	21	T 3445 501	25	T 3477 430	16	T 3504 005	8	T 3525 551	25
T 3421 518	30	T 3434 518	21	T 3445 502	25	T 3477 550	15	T 3504 013	7	T 3525 552	25
T 3421 550	30	T 3434 528	21	T 3445 504	25	T 3478 000	11	T 3504 018	7	T 3525 554	25
T 3424 005	21	T 3434 548	21	T 3445 518	25	T 3478 009	11	T 3504 028	7	T 3526 500	32
T 3424 055	21	T 3434 551	21	T 3445 528	25	T 3478 018	11	T 3504 048	7	T 3526 518	32
T 3424 058	21	T 3434 552	21	T 3445 548	25	T 3478 100	12	T 3504 055	8	T 3526 550	32
T 3424 501	21	T 3434 554	21	T 3445 551	25	T 3478 109	12	T 3504 058	8	T 3527 100	30
T 3424 502	21	T 3434 951	29	T 3445 552	25	T 3478 118	12	T 3504 551	7	T 3527 150	30
T 3424 504	21	T 3434 991	29	T 3445 554	25	T 3478 150	12	T 3504 552	7	T 3527 500	30
T 3424 518	21	T 3435 005	25	T 3446 500	32	T 3478 300	11	T 3504 554	7	T 3527 518	30

Summary of Part Numbers

Part Number	Page	Part Number	Page	Part Number	Page	Part Number	Page	Part Number	Page	Part Number	Page
T 3527 900	31	T 3638 000	11	VN01 015 0047 (2)	43						
T 3528 501	27	T 3638 004	11	VN01 015 0052 (1)	43						
T 3528 502	27	T 3638 009	11	VN01 015 0052 (2)	43						
T 3528 504	27	T 3638 100	12	VN02 015 0046 (1)	43						
T 3528 518	27	T 3638 109	12	VN02 015 0046 (2)	43						
T 3528 528	27	T 3638 118	12	VN02 015 0047 (1)	43						
T 3528 548	27	T 3638 304	11	VN02 015 0047 (2)	43						
T 3528 551	27	T 3638 404	12	VN02 015 0052 (1)	43						
T 3528 552	27	T 3641 500	30	VN02 015 0052 (2)	43						
T 3528 554	27	T 3641 518	30	ZN01 015 0046 (1)	43						
T 3529 501	23	T 3644 005	21	ZN01 015 0046 (2)	43						
T 3529 502	23	T 3644 058	21	ZN01 015 0047 (1)	43						
T 3529 504	23	T 3644 501	21	ZN01 015 0047 (2)	43						
T 3529 518	23	T 3644 502	21	ZN01 015 0052 (1)	43						
T 3529 528	23	T 3644 504	21	ZN01 015 0052 (2)	43						
T 3529 548	23	T 3644 518	21	ZN02 015 0046 (1)	43						
T 3529 551	23	T 3644 528	21	ZN02 015 0046 (2)	43						
T 3529 552	23	T 3644 548	21	ZN02 015 0047 (1)	43						
T 3529 554	23	T 3645 005	25	ZN02 015 0047 (2)	43						
T 3621 500	30	T 3645 058	25	ZN02 015 0052 (1)	43						
T 3621 518	30	T 3645 501	25	ZN02 015 0052 (2)	43						
T 3624 005	21	T 3645 502	25								
T 3624 058	21	T 3645 504	25								
T 3624 501	21	T 3645 518	25								
T 3624 502	21	T 3645 528	25								
T 3624 504	21	T 3645 548	25								
T 3624 518	21	T 3646 500	32								
T 3624 528	21	T 3646 518	32								
T 3624 548	21	T 3647 100	30								
T 3625 005	25	T 3647 500	30								
T 3625 058	25	T 3647 518	30								
T 3625 501	25	T 3648 501	27								
T 3625 502	25	T 3648 502	27								
T 3625 504	25	T 3648 504	27								
T 3625 518	25	T 3648 518	27								
T 3625 528	25	T 3648 528	27								
T 3625 548	25	T 3648 548	27								
T 3626 500	32	T 3649 501	23								
T 3626 518	32	T 3649 502	23								
T 3627 100	30	T 3649 504	23								
T 3627 500	30	T 3649 518	23								
T 3627 518	30	T 3649 528	23								
T 3628 501	27	T 3649 548	23								
T 3628 502	27	T 3650 000	7								
T 3628 504	27	T 3650 001	7								
T 3628 518	27	T 3650 002	7								
T 3628 528	27	T 3650 004	7								
T 3628 548	27	T 3650 005	8								
T 3629 501	23	T 3650 058	8								
T 3629 502	23	T 3651 000	9								
T 3629 504	23	T 3651 001	9								
T 3629 518	23	T 3651 002	9								
T 3629 528	23	T 3651 004	9								
T 3629 548	23	T 3651 005	10								
T 3635 000	7	T 3651 058	10								
T 3635 001	7	T 3652 000	15								
T 3635 002	7	T 3652 001	15								
T 3635 004	7	T 3652 009	15								
T 3635 005	8	T 3652 100	16								
T 3635 058	8	T 3652 304	15								
T 3636 000	9	T 3652 404	16								
T 3636 001	9	T 3653 000	11								
T 3636 002	9	T 3653 004	11								
T 3636 004	9	T 3653 009	11								
T 3636 005	10	T 3653 100	12								
T 3636 058	10	T 3653 109	12								
T 3637 000	15	T 3653 118	12								
T 3637 001	15	T 3653 304	11								
T 3637 009	15	T 3653 404	12								
T 3637 100	16	VN01 015 0046 (1)	43								
T 3637 304	15	VN01 015 0046 (2)	43								
T 3637 404	16	VN01 015 0047 (1)	43								

International

Argentina
Amphenol Argentina
Av. Callao 930
2nd Floor Office B "Plaza"
C1023 AAP Buenos Aires
Phone +54 11 48 15 68 86
www.amphenol.com.ar

Australia
Amphenol Australia Pty. Ltd.
2 Fiveways Blvd
Keysborough
Victoria 31 73
Phone +61 3 8796 8888
www.amphenol.com.au

Brazil
Amphenol do Brasil Ltda.
Rua Diogo Moreira 132, 20th Floor
CEP 05423-101 Sao Paulo SP
Phone +55 11 3815 1003
www.amphenol.com.br

China
Amphenol-Tuchel Electronics
China Branch
20 Tianshan Road
Changzhou 213022
Phone +86 0519 5110301
www.amphenol.info

France
Amphenol Socapex S.A.S.
948, Promenade de l'Arve, BP 29
Thyez Cedex, 74311
Phone +33 4 5089 2800
www.amphenol-socapex.com

Germany
Amphenol-Tuchel Electronics GmbH
August-Haeusser-Str. 10
74080 Heilbronn
Phone +49 7131 929-0
www.amphenol.de

India
Amphenol Interconnect India Pvt Ltd
105, Bhosari Industrial Area
Pune – 411 026
Phone +91 20 27120481
www.amphenol-in.com

Italy
Amphenol-Tuchel Italy
Via Barbaiana n. 5
20020 Lainate (MI)
Phone +39 02 932 541
www.amphenol.info

Korea
Amphenol DaeShin Elect and
Precision Co.,Ltd
558 Songnae-Dong, Sosa-Gu
Bucheon-City, Kyunggi-Do
Korea 422-130
Phone +82 32 610 3800
www.amphenol.co.kr

Mexico
Amphenol Mexico
Prolongacion Reforma 61 - 6 B2
Col. Paseo de las Lomas
C.P. 01330 Mexico D.F.
Phone +52 55 5258 9984
www.amphenolmexico.com

Singapore
Asia Pacific Sales Operations
72 Bendemeer Rd, No.03-32/33
Hiap Huat House, Luzerne, 339941
Singapore
Phone +65 6294 2128
www.amphenol.com

South Africa
Amphenol International Ltd
Chislehurston
30 Impala Road
2196 Chislehurston
Sandton, 2146
Phone +27 11 7839517
www.amphenol.co.za

Spain
Amphenol Espana
Edificio Burgosol, Oficina 55
C/Comunidad de Madrid, 35 bis
Las Rozas (Madrid), 28230
Phone +34 91 64 07302
www.amphenol.com

Taiwan
Amphenol East Asia Limited-Taiwan
5F, No 361, Fusing 1st Rd
Gueishan Township,
Taoyuan County 333
Phone +886 3 2647 200
www.amphenol.com

Turkey
Amphenol Turkey
Sun Plaza Kat: 15
Maslak Mah. Bilim Sok.No:15
34398 Sisli - Istanbul
Phone: +90 212 367 9220
www.amphenol.com.tr

United Kingdom
Amphenol Limited
Thanet Way,Whitstable
Kent, CT53JF
Phone +44 1227 773 200
www.amphenol.co.uk

USA
Amphenol-Tuchel Electronics
6900 Haggerty Road
Suite 200
Canton, Michigan 48187
Phone +1 734 4516400
www.amphenol.info

Amphenol Corporation
Corporate Headquarters
358 Hall Avenue
Wallingford, CT 06492
Phone +1 877 267 4366
Phone +1 203 265 8900
www.amphenol.com

More Amphenol companies can be found here: www.amphenol.com

Important Notice

All technical data have been measured in a laboratory environment and can be different during practical usage of the product. Any product information is for descriptive usage only and not legally binding; particularly the information does not constitute or provide any legal guaranties ("Beschaffenheitsgarantie" or "Haltbarkeitsgarantie").

We reserve the right to change the design due to improvement in quality, development or production requirements.
This catalogue must not be used in any form or manner without our prior approval in writing (Copyright Law, Fair Trading Law, Civil Code).

Your engineering sales representative:

Amphenol

Amphenol-Tuchel Electronics GmbH
August-Häusser-Str. 10 · D-74080 Heilbronn · Germany · Phone +49(0)7131 929-0 · Fax +49(0)7131 929-486 · www.amphenol.info

ATE 3040 E 1107 / 800 0811 Printed on chlorin-free bleached paper, specifications may be changed without notice. Copyright by Amphenol-Tuchel Electronics GmbH, Germany

Компания «ЭлектроПласт» предлагает заключение долгосрочных отношений при поставках импортных электронных компонентов на взаимовыгодных условиях!

Наши преимущества:

- Оперативные поставки широкого спектра электронных компонентов отечественного и импортного производства напрямую от производителей и с крупнейших мировых складов;
- Поставка более 17-ти миллионов наименований электронных компонентов;
- Поставка сложных, дефицитных, либо снятых с производства позиций;
- Оперативные сроки поставки под заказ (от 5 рабочих дней);
- Экспресс доставка в любую точку России;
- Техническая поддержка проекта, помощь в подборе аналогов, поставка прототипов;
- Система менеджмента качества сертифицирована по Международному стандарту ISO 9001;
- Лицензия ФСБ на осуществление работ с использованием сведений, составляющих государственную тайну;
- Поставка специализированных компонентов (Xilinx, Altera, Analog Devices, Intersil, Interpoint, Microsemi, Aeroflex, Peregrine, Syfer, Eurofarad, Texas Instrument, Miteq, Cobham, E2V, MA-COM, Hittite, Mini-Circuits,General Dynamics и др.);

Помимо этого, одним из направлений компании «ЭлектроПласт» является направление «Источники питания». Мы предлагаем Вам помощь Конструкторского отдела:

- Подбор оптимального решения, техническое обоснование при выборе компонента;
- Подбор аналогов;
- Консультации по применению компонента;
- Поставка образцов и прототипов;
- Техническая поддержка проекта;
- Защита от снятия компонента с производства.

Как с нами связаться

Телефон: 8 (812) 309 58 32 (многоканальный)
Факс: 8 (812) 320-02-42
Электронная почта: org@eplast1.ru
Адрес: 198099, г. Санкт-Петербург, ул. Калинина, дом 2, корпус 4, литера А.