3M™ HDC Socket

.100" Right Angle, PCB, 3 or 4-Row, Solder Tail or Press-Fit HDC Series

- High density 3-row version, up to 240 contacts single bay
- Mates with 3-row single plugs and headers
- High density 4-row version, up to 320 contacts single bay
- Mates with 4-row single plugs and headers
- Low 2 oz. insertion force
- RoHS* compliant. See the Regulatory Information Appendix (RIA) in the "RoHS compliance" section of www.3Mconnector.com for compliance information (RIA E1 & C1 apply)

Date Modified: April 14, 2010

Physical

Insulation:

Material: Glass Filled Thermoplastic (LCP)

Flammability: UL 94V-0

Color: Black

Contact:

Material: Copper Alloy

Plating:

Underplating: 50 µ" [1.27 µm] min. Nickel

Wiping Area: See Ordering Information

Termination Area: See Ordering Information

Marking: Part Number and Date Code

Electrical

Current Rating: 3.0 A per contact

Insulation Resistance: 1 x 10^3 MΩ min. at 500 V_{DC}

Withstanding Voltage: 900 V_{AC} for 1 minute

Environmental

Temperature Rating: -55°C to +125°C

Process Rating: Maximum 260°C (per J-STD-020C)

Moisture Sensitivity Level: 1 (per J-STD-020C)

UL File No.: E68080

3M is a trademark of 3M Company.
For technical, sales or ordering information call
800-225-5373

3-Row Single Bay

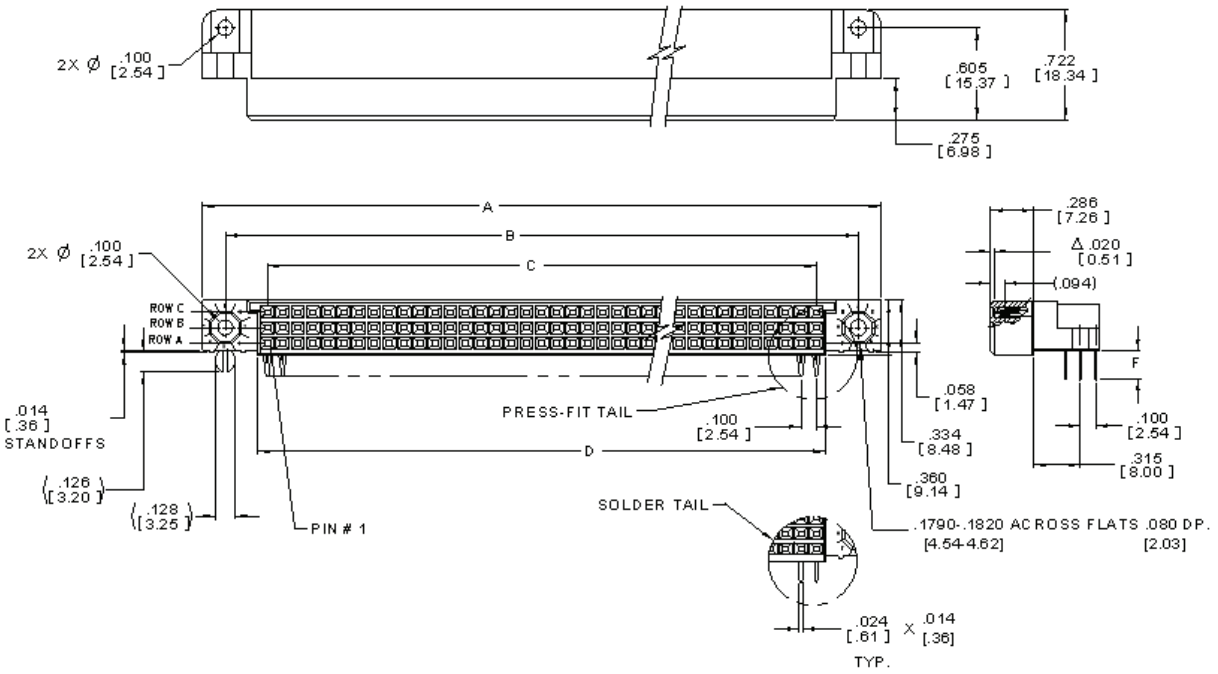

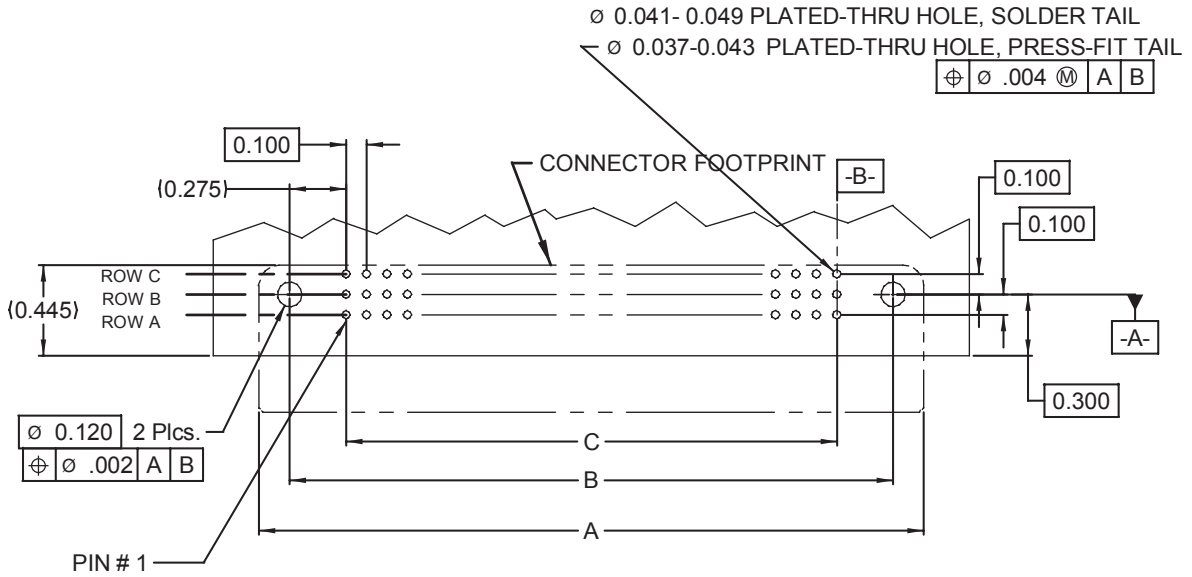

RECOMMENDED P.C.B. HOLE PATTERN

Inch
[mm]

Tolerance Unless Noted			
	.0	.00	.000
Inch	±.1	±.01	±.005

[ ] Dimensions for Reference only

TS-1137-C
Sheet 2 of 5

3M™ HDC Socket

.100" Right Angle, PCB, 3 or 4-Row, Solder Tail or Press-Fit

HDC Series

Product Table/Dimensions for 3- Row, Single Bay

Description	Contact Quantity	A	B	C	D
HDC-S045-31XX-XXXX	45	2.250 [57.15]	1.950 [49.53]	1.400 [35.56]	1.524 [38.71]
HDC-S075-31XX-XXXX	75	3.250 [82.55]	2.950 [74.93]	2.400 [60.96]	2.524 [64.11]
HDC-S090-31XX-XXXX	90	3.750 [95.25]	3.450 [87.63]	2.900 [73.66]	3.024 [76.81]
HDC-S096-31XX-XXXX	96	3.950 [100.33]	3.650 [92.71]	3.100 [78.74]	3.224 [81.89]
HDC-S102-31XX-XXXX	102	4.150 [105.41]	3.850 [97.79]	3.300 [83.82]	3.424 [86.97]
HDC-S120-31XX-XXXX	120	4.750 [120.65]	4.450 [113.03]	3.900 [99.06]	4.024 [102.21]
HDC-S135-31XX-XXXX	135	5.250 [133.35]	4.950 [125.73]	4.400 [111.76]	4.524 [114.91]
HDC-S150-31XX-XXXX	150	5.750 [146.05]	5.450 [138.43]	4.900 [124.46]	5.024 [127.61]
HDC-S165-31XX-XXXX	165	6.250 [158.75]	5.950 [151.13]	5.400 [137.16]	5.524 [140.31]
HDC-S180-31XX-XXXX	180	6.750 [171.45]	6.450 [163.83]	5.900 [149.86]	6.024 [153.01]
HDC-S195-31XX-XXXX	195	7.250 [184.15]	6.950 [176.53]	6.400 [162.56]	6.524 [165.71]
HDC-S210-31XX-XXXX	210	7.750 [196.85]	7.450 [189.23]	6.900 [175.26]	7.024 [178.41]
HDC-S225-31XX-XXXX	225	8.250 [209.55]	7.950 [201.93]	7.400 [187.96]	7.524 [191.11]
HDC-S228-31XX-XXXX	228	8.350 [212.09]	8.050 [204.47]	7.500 [190.50]	7.624 [193.65]
HDC-S240-31XX-XXXX	240	8.750 [222.25]	8.450 [214.63]	7.900 [200.66]	8.024 [203.81]

Ordering Information

HDC - SXXX - X1XX - XXXX

Contact Quantity
See Contact Quantities on Product Table/ Dimensions Charts

Row Quantity
3 = Three Row
4 = Four Row

Insulator Options
1 = Single bay insulator

Termination Style / Lead length - Dim. F
P1 - Press-fit Right Angle / 0.157″ (4.00)
S1 - Solder Right Angle / 0.110″ (2.79)
S2 - Solder Tail / 0.160″ (4.06)

Plating Options: (See Plating Chart)

Plating Chart

Plating Suffix	Press-Fit Terminations	Solder Tail Terminations	Plating composition
TG30	(RIA E2 & C2 apply)	(RIA E3 & C2 apply)	30 µ" [0.76 µm] Min. Au Area 1 100 µ" [2.54 µm] Min. Tin Lead Tail Area 4 50 µ" [1.27 µm] Min. Ni all over
KR	(RIA E1 & C1 apply)	(RIA E1 & C1 apply)	30 µ" [0.76 µm] Min. Au on Area 1 100 µ" [2.54 µm] Min. Whisker Mitigating Matte Tin on Area 4 50 µ" [1.27 µm] Min. Ni all over

TS-1137-C
Sheet 3 of 5

3M is a trademark of 3M Company.

For technical, sales or ordering information call
800-225-5373

4-Row Single Bay

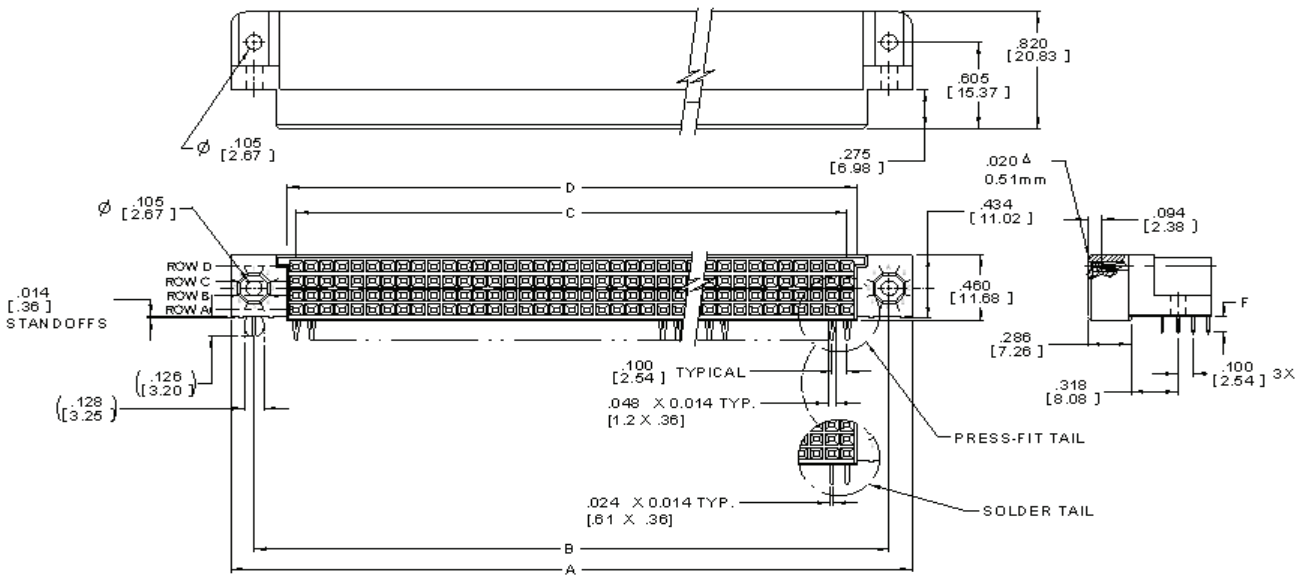

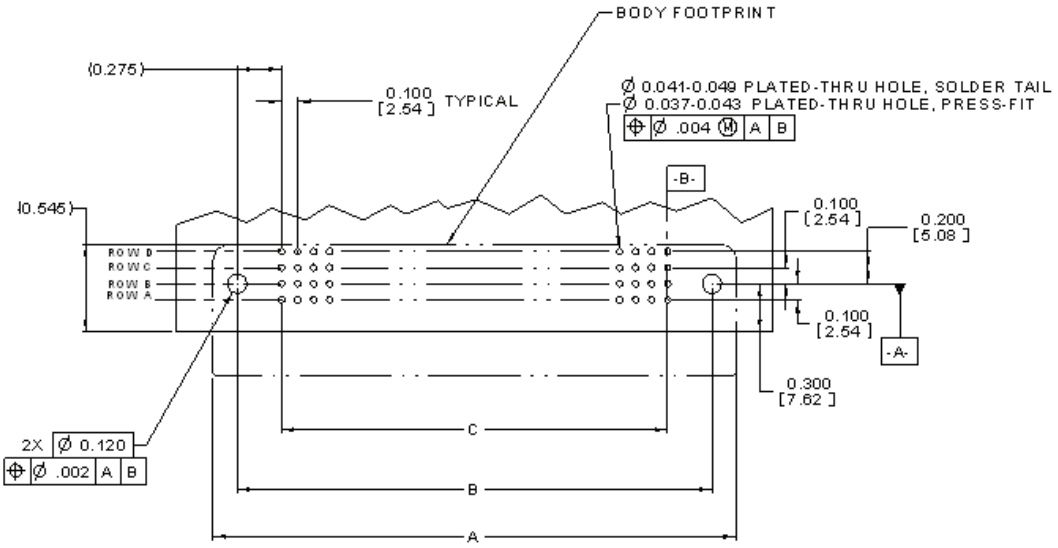

RECOMMENDED P.C.B. HOLE PATTERN

TS-1137-C
Sheet 4 of 5

Product Table/Dimensions for 4-Row Socket Single Bay					
Description	Pin Quantity	A	B	C	D
HDC-S060-41XX-XXXX	60	2.250 [57.15]	1.950 [49.53]	1.400 [49.53]	1.524 [38.71]
HDC-S076-41XX-XXXX	76	2.650 [67.31]	2.350 [59.69]	1.800 [45.72]	1.924 [48.87]
HDC-S080-41XX-XXXX	80	2.750 [69.85]	2.450 [62.23]	1.900 [48.26]	2.024 [51.41]
HDC-S100-41XX-XXXX	100	3.250 [82.55]	2.950 [74.93]	2.400 [60.96]	2.524 [64.11]
HDC-S120-41XX-XXXX	120	3.750 [95.25]	3.450 [87.63]	2.900 [73.66]	3.024 [76.81]
HDC-S128-41XX-XXXX	128	3.950 [100.33]	3.650 [92.71]	3.100 [78.74]	3.224 [81.89]
HDC-S140-41XX-XXXX	140	4.250 [107.95]	3.950 [100.33]	3.400 [86.36]	3.524 [89.51]
HDC-S160-41XX-XXXX	160	4.750 [120.65]	4.450 [113.03]	3.900 [99.06]	4.024 [102.21]
HDC-S168-41XX-XXXX	168	4.950 [125.73]	4.650 [118.11]	4.100 [104.14]	4.224 [107.29]
HDC-S180-41XX-XXXX	180	5.250 [133.35]	4.950 [125.73]	4.400 [111.76]	4.524 [114.91]
HDC-S200-41XX-XXXX	200	5.750 [146.05]	5.450 [138.43]	4.900 [124.46]	5.024 [127.61]
HDC-S216-41XX-XXXX	216	6.150 [156.21]	5.850 [148.59]	5.300 [134.62]	5.424 [137.77]
HDC-S220-41XX-XXXX	220	6.250 [158.75]	5.950 [151.13]	5.400 [137.16]	5.524 [140.31]
HDC-S240-41XX-XXXX	240	6.750 [171.45]	6.450 [163.83]	5.900 [149.86]	6.024 [153.01]
HDC-S260-41XX-XXXX	260	7.250 [184.15]	6.950 [176.53]	6.400 [162.56]	6.524 [165.71]
HDC-S280-41XX-XXXX	280	7.750 [196.85]	7.450 [189.23]	6.900 [175.26]	7.024 [178.41]
HDC-S300-41XX-XXXX	300	8.250 [209.55]	7.950 [209.55]	7.400 [187.96]	7.524 [191.11]
HDC-S320-41XX-XXXX	320	8.750 [222.25]	8.450 [214.63]	7.900 [200.66]	8.024 [203.81]

3M

Electronic Solutions Division
Interconnect Solutions
http://www.3Mconnector.com

3M is a trademark of 3M Company.

For technical, sales or ordering information call
800-225-5373

Important Notice

All statements, technical information, and recommendations related to 3M's products are based on information believed to be reliable, but the accuracy or completeness is not guaranteed. Before using this product, you must evaluate it and determine if it is suitable for your intended application. You assume all risks and liability associated with such use. Any statements related to the product which are not contained in 3M's current publications, or any contrary statements contained on your purchase order shall have no force or effect unless expressly agreed upon, in writing, by an authorized officer of 3M.

Warranty; Limited Remedy; Limited Liability.

This product will be free from defects in material and manufacture for a period of ninety (90) days from the time of purchase. **3M MAKES NO OTHER WARRANTIES INCLUDING, BUT NOT LIMITED TO, ANY IMPLIED WARRANTY OF MERCHANTABILITY OR FITNESS FOR A PARTICULAR PURPOSE.** If this product is defective within the warranty period stated above, your exclusive remedy shall be, at 3M's option, to replace or repair the 3M product or refund the purchase price of the 3M product. **Except where prohibited by law, 3M will not be liable for any indirect, special, incidental or consequential loss or damage arising from this 3M product, regardless of the legal theory asserted.**

3M Electronics Solutions Division
6801 River Place Blvd.
Austin, TX 78726-9000
U.S.A.
1-800-225-5373
www.3Mconnector.com

Please recycle. Printed in USA.
© 3M 2010. All rights reserved.
RIA-2217B-E
3M is a trademark of 3M Company.

Компания «ЭлектроПласт» предлагает заключение долгосрочных отношений при поставках импортных электронных компонентов на взаимовыгодных условиях!

Наши преимущества:

- Оперативные поставки широкого спектра электронных компонентов отечественного и импортного производства напрямую от производителей и с крупнейших мировых складов;
- Поставка более 17-ти миллионов наименований электронных компонентов;
- Поставка сложных, дефицитных, либо снятых с производства позиций;
- Оперативные сроки поставки под заказ (от 5 рабочих дней);
- Экспресс доставка в любую точку России;
- Техническая поддержка проекта, помощь в подборе аналогов, поставка прототипов;
- Система менеджмента качества сертифицирована по Международному стандарту ISO 9001;
- Лицензия ФСБ на осуществление работ с использованием сведений, составляющих государственную тайну;
- Поставка специализированных компонентов (Xilinx, Altera, Analog Devices, Intersil, Interpoint, Microsemi, Aeroflex, Peregrine, Syfer, Eurofarad, Texas Instrument, Miteq, Cobham, E2V, MA-COM, Hittite, Mini-Circuits,General Dynamics и др.);

Помимо этого, одним из направлений компании «ЭлектроПласт» является направление «Источники питания». Мы предлагаем Вам помощь Конструкторского отдела:

- Подбор оптимального решения, техническое обоснование при выборе компонента;
- Подбор аналогов;
- Консультации по применению компонента;
- Поставка образцов и прототипов;
- Техническая поддержка проекта;
- Защита от снятия компонента с производства.

Как с нами связаться

Телефон: 8 (812) 309 58 32 (многоканальный)
Факс: 8 (812) 320-02-42
Электронная почта: org@eplast1.ru
Адрес: 198099, г. Санкт-Петербург, ул. Калинина, дом 2, корпус 4, литера А.