9162 Slide-In SIM Card Connector

GENERAL DESCRIPTION

The standard SIM connector is specifically designed for handheld devices requiring secure subscriber identification.

Following on from the introduction of our standard SIM block with an offering of 3 standard heights, 0.80mm, 1.60mm, or 2.40mm, AVX is now adding another standard to the 9162 series SIM connectors, the slide-in SIM.

Unlike SIM blocks which require SIM card guides to aid insertion, removal and retention of the SIM card, the slide-in SIM has guides as part of the connector mold design.

Contacts are stamped, gold plated, rated 0.5A, and 5000 mechanical cycles.

Our contact design is specifically rounded to avoid any possible damage during and after card insertion to the card itself, assuming normal use. The design also incorporates protection features to avoid contact damage during this operation such as contact snagging.

Please contact the appropriate sales office for further details of this service.

KEY FEATURES AND BENEFITS

- Produced for use with mini SIM cards.
- The insulator is molded from high temperature plastic enabling the connector to be used in convection or infrared soldering processes.
- Supplied on tape and reel packaging for pick and place assembly.
- The all plastic design, assuming normal use prevents damage to the SIM card on insertion.
- Optional SMT contact size:
  Standard SMT contact size – 1.60mm x 1.60mm
  Narrow SMT contact size – 1.05mm x 0.60mm
- RoHS Compliant available.

RoHS COMPLIANT

Standard SMT Contact Layout

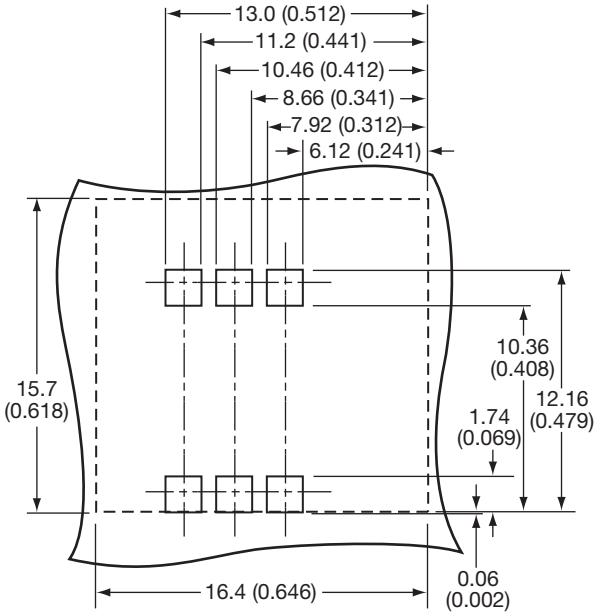

Narrow SMT Contact Layout

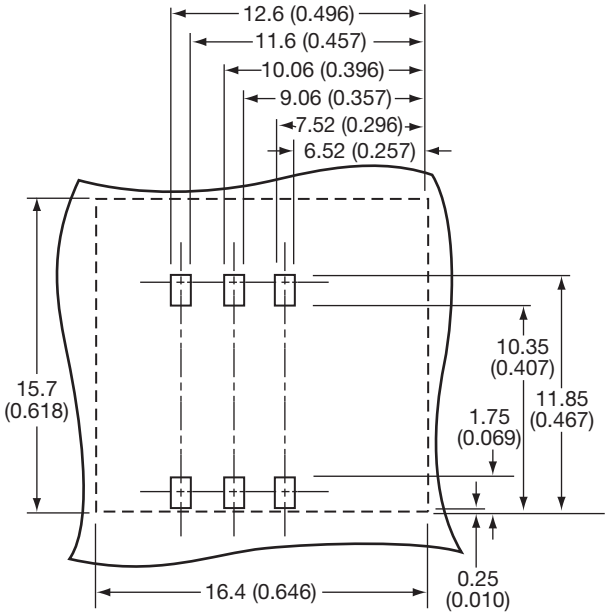

Connector Height 1.75mm

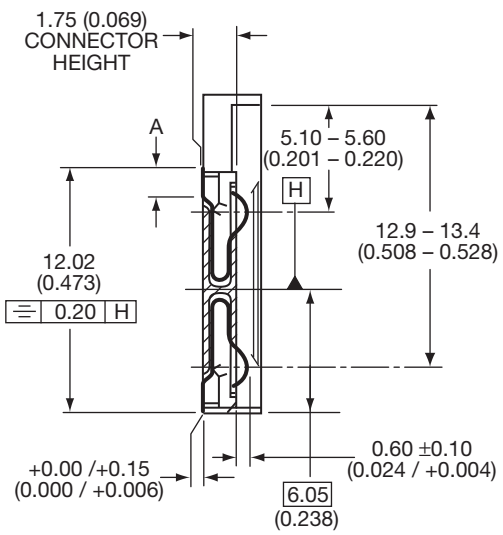

SECTION Z-Z

	Standard	Narrow
A	1.46 (0.057)	1.05 (0.041)
B	1.60 (0.063)	0.60 (0.024)

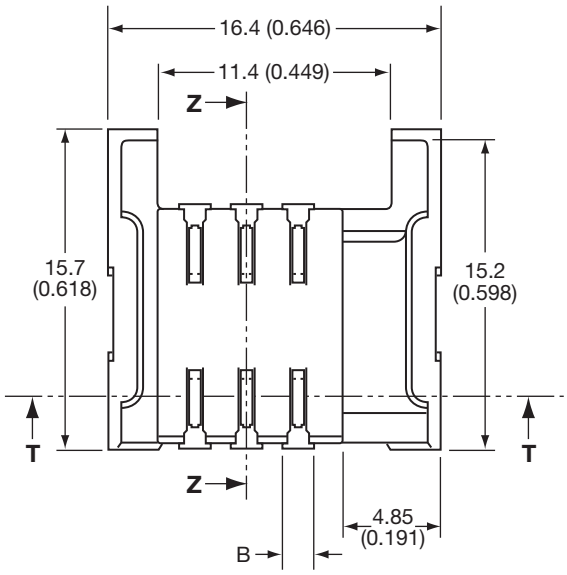

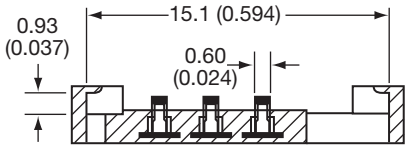

SECTION T-T

HOW TO ORDER

00

Prefix
00 = Standard
58 = Special

9162

Series

006

No. of Contacts
006 = 6

2X 6

SIM Type
20 = Standard SMT Footprint
21 = Narrow SMT Footprint

Plating Options
Selective Gold, Pure Tin Tail

XXX

Connector Height
XXX refers to Connector Height
175 = 1.75mm stack height

9162 SIM Card Block

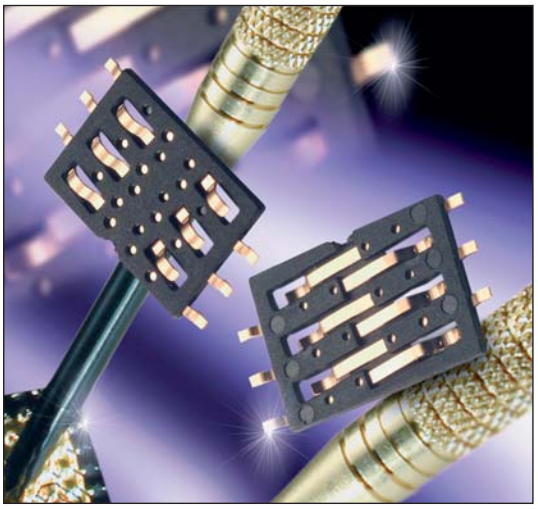

GENERAL DESCRIPTION

The standard SIM connector is specifically designed for handheld devices requiring secure subscriber identification.

The connectors are available in a standard 6 pin configuration on a 2.54mm pitch with a 0.8mm height.

Contacts are stamped, gold plated, rated at 0.5A, and 5000 mechanical cycles.

Our contact design is specifically rounded to avoid any possible damage during and after card insertion to the card itself, assuming normal use. The design also incorporates protection features to avoid contact damage during this operation such as contact snagging.

Please contact the appropriate sales office for further details.

KEY FEATURES AND BENEFITS

- Produced for use with both full ISO cards and mini SIM cards.
- The insulator is molded from high temperature plastic enabling the connector to be used in convection or infrared soldering processes.
- Supplied on tape and reel packaging for pick and place assembly.
- RoHS Compliant.

RoHS COMPLIANT

0.8mm PCB Pad Layout

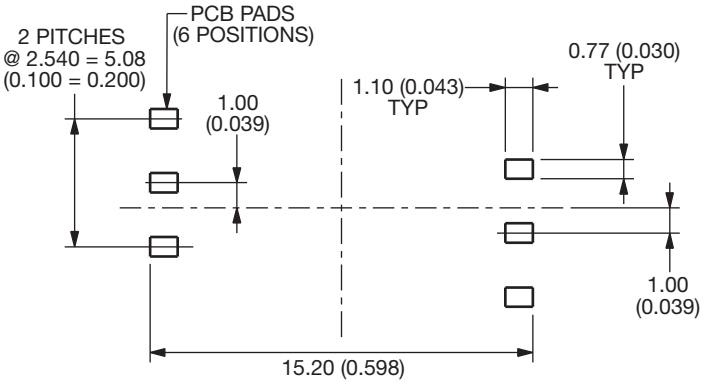

Connector Height 0.8mm

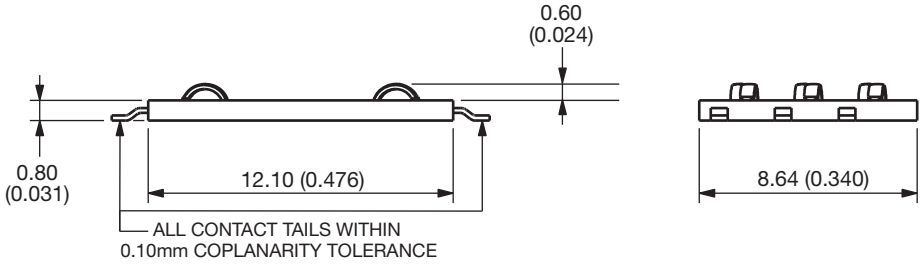

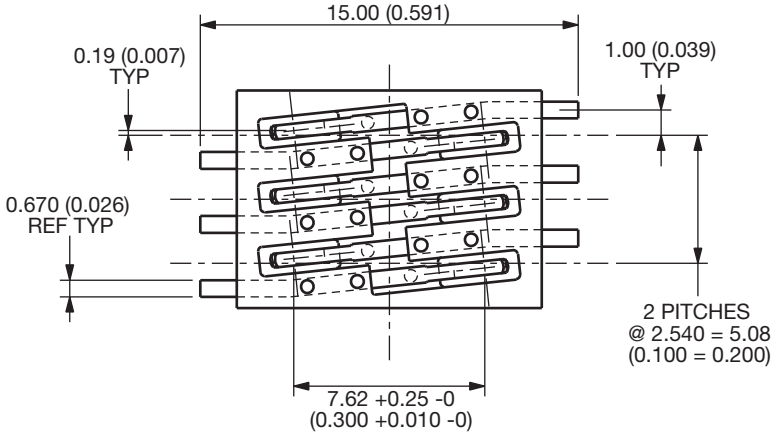

Illustration of Pin Configuration

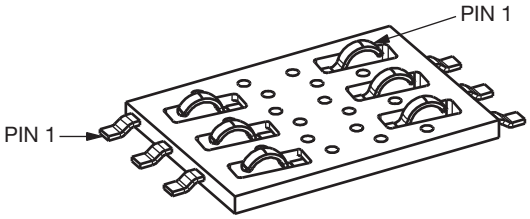

HOW TO ORDER

00	9162	006	006	080
Prefix	**Series**	**Number of Contacts**	**SIM Type** 006 = Selective Gold, Pure Tin Tail	**Connector Height** 080 = 0.8mm stack height

Компания «ЭлектроПласт» предлагает заключение долгосрочных отношений при поставках импортных электронных компонентов на взаимовыгодных условиях!

Наши преимущества:

- Оперативные поставки широкого спектра электронных компонентов отечественного и импортного производства напрямую от производителей и с крупнейших мировых складов;
- Поставка более 17-ти миллионов наименований электронных компонентов;
- Поставка сложных, дефицитных, либо снятых с производства позиций;
- Оперативные сроки поставки под заказ (от 5 рабочих дней);
- Экспресс доставка в любую точку России;
- Техническая поддержка проекта, помощь в подборе аналогов, поставка прототипов;
- Система менеджмента качества сертифицирована по Международному стандарту ISO 9001;
- Лицензия ФСБ на осуществление работ с использованием сведений, составляющих государственную тайну;
- Поставка специализированных компонентов (Xilinx, Altera, Analog Devices, Intersil, Interpoint, Microsemi, Aeroflex, Peregrine, Syfer, Eurofarad, Texas Instrument, Miteq, Cobham, E2V, MA-COM, Hittite, Mini-Circuits,General Dynamics и др.);

Помимо этого, одним из направлений компании «ЭлектроПласт» является направление «Источники питания». Мы предлагаем Вам помощь Конструкторского отдела:

- Подбор оптимального решения, техническое обоснование при выборе компонента;
- Подбор аналогов;
- Консультации по применению компонента;
- Поставка образцов и прототипов;
- Техническая поддержка проекта;
- Защита от снятия компонента с производства.

Как с нами связаться

Телефон: 8 (812) 309 58 32 (многоканальный)
Факс: 8 (812) 320-02-42
Электронная почта: org@eplast1.ru
Адрес: 198099, г. Санкт-Петербург, ул. Калинина, дом 2, корпус 4, литера А.