4-megabyte 2.7-volt DataFlash® Card

AT45DCB004C

Features

- **MultiMediaCard (MMC) Form Factor**
- **Single 2.7V to 3.6V Supply**
- **40 MHz Max Clock Frequency**
- **Serial Peripheral Interface (SPI) Compatible**
- **Low Power Dissipation**
  - **10mA Active Read Current Typical**
  - **6µA CMOS Standby Current Typical**
- **Industrial Temperature Range**
- **Pb-free/RoHS-compliant Package**

1. Description

The AT45DCB004C is 2.7-volt SPI compatible serial interface DataFlash® Card. This 7-pin card is form factor compatible to the MultiMediaCard standard leveraging on a wide range of low cost connectors that are commercially available. Additionally, the DataFlash Card is pinout compatible to the SPI version of the MMC card.

The small form factor and simple interface make the DataFlash Card ideal for a wide variety of data- and program code-storage applications where a removable storage medium is required. Applications range from voice/audio, text or image storage to software applications, system upgrades and software patches.

For detailed device specifications, please refer to the AT45DB321C DataFlash datasheet.

Table 1-1. Pin Configuration

Pin	Pin Name	Function
1	$\overline{CS}$	Chip Select
2	SI	Serial Input
3	GND	Ground
4	VCC	Supply
5	SCK	Serial Clock
6	NC	No Connect
7	SO	Serial Output

Figure 1-1. DataFlash Card - Top View

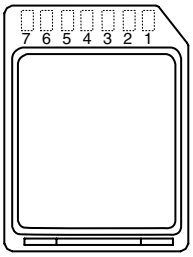

3577C–DFLASH–04/06

2. Ordering Information

f_{SCK} (MHz)	I_{CC} (mA)		Ordering Code	Package	Operation Range
	Active	Standby			
40	15	0.015	AT45DCB004C	7DF1[1]	Industrial (-40°C to 85°C)

Note: 1. The 7DF1 is a Pb-free/RoHS-compliant package.

Package Type	
7DF1	7-lead, 2.5 mm Pitch 24 x 32 x 1.4 mm Body DataFlash Card

3. Packaging Information

3.1 7DF1 – DataFlash Card

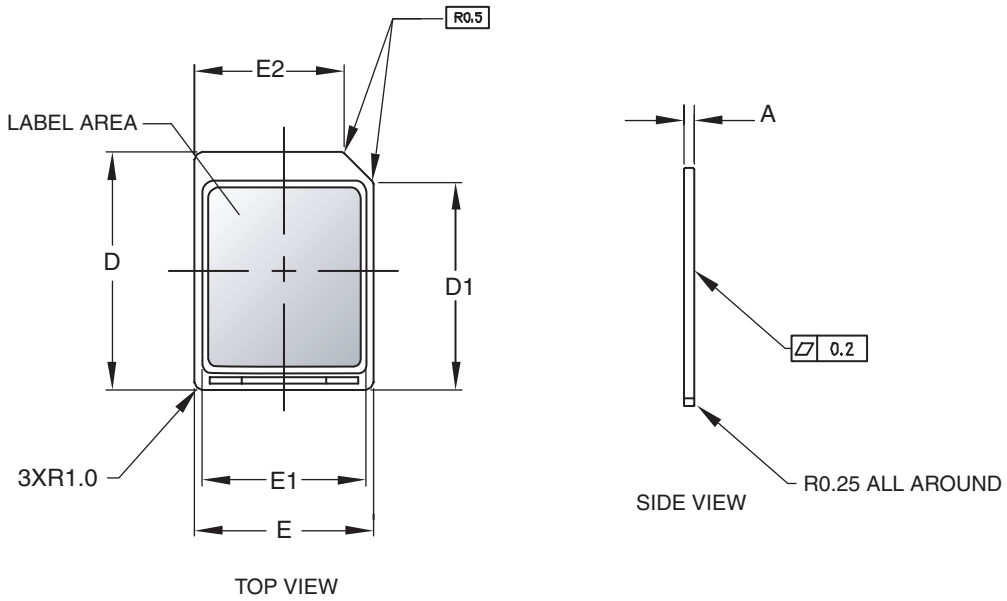

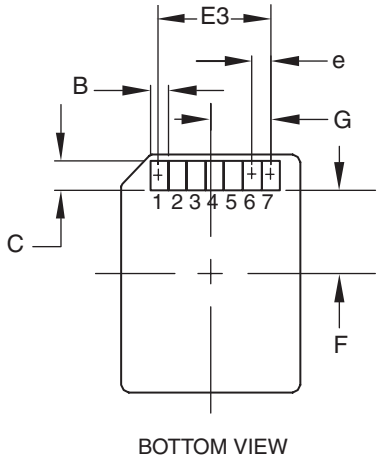

COMMON DIMENSIONS
(Unit of Measure = mm)

SYMBOL	MIN	NOM	MAX	NOTE
A	1.30	1.40	1.50	
B	2.40 TYP			
C	4.00 TYP			
D	31.90	32.00	32.10	
D1	28.00 REF			
E	23.90	24.00	24.10	
E1	22.00 REF			
E2	20.00 REF			
E3	15.00 TYP			
F	11.20 REF			
G	8.13 TYP			
e	2.50 TYP			

11/10/05

	TITLE	DRAWING NO.	REV.
2325 Orchard Parkway San Jose, CA 95131	**7DF1**, 7-pad, 2.5 mm Pitch 24 x 32 x 1.4 mm Body DataFlash Card	7DF1	B

4. Revision History

Revision Level – Revision Date	History
A – June 2005	Initial release
B – March 2006	Added text to indicate that DataFlash cards are Pb-free
C – April 2006	Added text to indicate that DataFlash cards are RoHS compliant

Atmel Corporation

2325 Orchard Parkway
San Jose, CA 95131, USA
Tel: 1(408) 441-0311
Fax: 1(408) 487-2600

Regional Headquarters

Europe
Atmel Sarl
Route des Arsenaux 41
Case Postale 80
CH-1705 Fribourg
Switzerland
Tel: (41) 26-426-5555
Fax: (41) 26-426-5500

Asia
Room 1219
Chinachem Golden Plaza
77 Mody Road Tsimshatsui
East Kowloon
Hong Kong
Tel: (852) 2721-9778
Fax: (852) 2722-1369

Japan
9F, Tonetsu Shinkawa Bldg.
1-24-8 Shinkawa
Chuo-ku, Tokyo 104-0033
Japan
Tel: (81) 3-3523-3551
Fax: (81) 3-3523-7581

Atmel Operations

Memory
2325 Orchard Parkway
San Jose, CA 95131, USA
Tel: 1(408) 441-0311
Fax: 1(408) 436-4314

Microcontrollers
2325 Orchard Parkway
San Jose, CA 95131, USA
Tel: 1(408) 441-0311
Fax: 1(408) 436-4314

La Chantrerie
BP 70602
44306 Nantes Cedex 3, France
Tel: (33) 2-40-18-18-18
Fax: (33) 2-40-18-19-60

ASIC/ASSP/Smart Cards
Zone Industrielle
13106 Rousset Cedex, France
Tel: (33) 4-42-53-60-00
Fax: (33) 4-42-53-60-01

1150 East Cheyenne Mtn. Blvd.
Colorado Springs, CO 80906, USA
Tel: 1(719) 576-3300
Fax: 1(719) 540-1759

Scottish Enterprise Technology Park
Maxwell Building
East Kilbride G75 0QR, Scotland
Tel: (44) 1355-803-000
Fax: (44) 1355-242-743

RF/Automotive
Theresienstrasse 2
Postfach 3535
74025 Heilbronn, Germany
Tel: (49) 71-31-67-0
Fax: (49) 71-31-67-2340

1150 East Cheyenne Mtn. Blvd.
Colorado Springs, CO 80906, USA
Tel: 1(719) 576-3300
Fax: 1(719) 540-1759

Biometrics/Imaging/Hi-Rel MPU/
High Speed Converters/RF Datacom
Avenue de Rochepleine
BP 123
38521 Saint-Egreve Cedex, France
Tel: (33) 4-76-58-30-00
Fax: (33) 4-76-58-34-80

Literature Requests
www.atmel.com/literature

Disclaimer: The information in this document is provided in connection with Atmel products. No license, express or implied, by estoppel or otherwise, to any intellectual property right is granted by this document or in connection with the sale of Atmel products. **EXCEPT AS SET FORTH IN ATMEL'S TERMS AND CONDITIONS OF SALE LOCATED ON ATMEL'S WEB SITE, ATMEL ASSUMES NO LIABILITY WHATSOEVER AND DISCLAIMS ANY EXPRESS, IMPLIED OR STATUTORY WARRANTY RELATING TO ITS PRODUCTS INCLUDING, BUT NOT LIMITED TO, THE IMPLIED WARRANTY OF MERCHANTABILITY, FITNESS FOR A PARTICULAR PURPOSE, OR NON-INFRINGEMENT. IN NO EVENT SHALL ATMEL BE LIABLE FOR ANY DIRECT, INDIRECT, CONSEQUENTIAL, PUNITIVE, SPECIAL OR INCIDENTAL DAMAGES (INCLUDING, WITHOUT LIMITATION, DAMAGES FOR LOSS OF PROFITS, BUSINESS INTERRUPTION, OR LOSS OF INFORMATION) ARISING OUT OF THE USE OR INABILITY TO USE THIS DOCUMENT, EVEN IF ATMEL HAS BEEN ADVISED OF THE POSSIBILITY OF SUCH DAMAGES.** Atmel makes no representations or warranties with respect to the accuracy or completeness of the contents of this document and reserves the right to make changes to specifications and product descriptions at any time without notice. Atmel does not make any commitment to update the information contained herein. Unless specifically provided otherwise, Atmel products are not suitable for, and shall not be used in, automotive applications. Atmel's products are not intended, authorized, or warranted for use as components in applications intended to support or sustain life.

© Atmel Corporation 2006. **All rights reserved.** Atmel®, logo and combinations thereof, Everywhere You Are®, DataFlash® and others, are registered trademarks or trademarks of Atmel Corporation or its subsidiaries. Other terms and product names may be trademarks of others.

Printed on recycled paper.

3577C–DFLASH–04/06

Компания «ЭлектроПласт» предлагает заключение долгосрочных отношений при поставках импортных электронных компонентов на взаимовыгодных условиях!

Наши преимущества:

- Оперативные поставки широкого спектра электронных компонентов отечественного и импортного производства напрямую от производителей и с крупнейших мировых складов;
- Поставка более 17-ти миллионов наименований электронных компонентов;
- Поставка сложных, дефицитных, либо снятых с производства позиций;
- Оперативные сроки поставки под заказ (от 5 рабочих дней);
- Экспресс доставка в любую точку России;
- Техническая поддержка проекта, помощь в подборе аналогов, поставка прототипов;
- Система менеджмента качества сертифицирована по Международному стандарту ISO 9001;
- Лицензия ФСБ на осуществление работ с использованием сведений, составляющих государственную тайну;
- Поставка специализированных компонентов (Xilinx, Altera, Analog Devices, Intersil, Interpoint, Microsemi, Aeroflex, Peregrine, Syfer, Eurofarad, Texas Instrument, Miteq, Cobham, E2V, MA-COM, Hittite, Mini-Circuits,General Dynamics и др.);

Помимо этого, одним из направлений компании «ЭлектроПласт» является направление «Источники питания». Мы предлагаем Вам помощь Конструкторского отдела:

- Подбор оптимального решения, техническое обоснование при выборе компонента;
- Подбор аналогов;
- Консультации по применению компонента;
- Поставка образцов и прототипов;
- Техническая поддержка проекта;
- Защита от снятия компонента с производства.

Как с нами связаться

Телефон: 8 (812) 309 58 32 (многоканальный)
Факс: 8 (812) 320-02-42
Электронная почта: org@eplast1.ru
Адрес: 198099, г. Санкт-Петербург, ул. Калинина, дом 2, корпус 4, литера А.