Model 520

Temperature Compensated Crystal Oscillator

FEATURES

- **Clipped Sine Wave Output**
- **Optional Voltage Control for Frequency Tuning [VCTCXO]**
- 2.5mmx2.0mm Surface Mount Package
- Frequency Range 10 – 52 MHz [Standard Frequencies List Shown Below]
- Fundamental Crystal Design
- Frequency Stability, several options to choose from ±0.5ppm ~ ±2.5ppm
- Operating Voltage, +1.8Vdc ~ +2.5Vdc
- Operating Temperature to -40°C to +85°C
- Tape & Reel Packaging Available
- **RoHS/Green Compliant (6/6)**

APPLICATIONS

The Model 520 Temperature Compensated Crystal Oscillator (TCXO) is a quartz based, clipped sine wave output, with optional frequency tuning, in a hermetically sealed ceramic package. M520 is suitable for wireless communications, broadband access, WLAN/WiMax/WIFI, portable equipment, test and measurement and mobile applications.

ORDERING INFORMATION

520 □ □ □ □ □ □ □ M □ □ □ □

SUPPLY VOLTAGE

M = +1.8Vdc
N = +2.5Vdc
T = +2.8Vdc
R = +3.0Vdc
L = +3.3Vdc

FREQUENCY IN MHz

M - indicates MHz and decimal point. [3]
[See table below for standard frequencies available.]

FREQUENCY TUNING (AFC)

T = TCXO (no AFC)
A = ± 5 ppm [4]

FREQUENCY STABILITY *

05 = ± 0.5 ppm [1]
10 = ± 1.0 ppm [2]
15 = ± 1.5 ppm
20 = ± 2.0 ppm
25 = ± 2.5 ppm (std)

OPERATING TEMPERATURE RANGE

H = -10°C to +60°C
C = -20°C to +70°C
D = -30°C to +85°C (std)
I = -40°C to +85°C

* Frequency vs. Temperature Only

1] Only available with temperature range codes "H" and "C".

2] Only available with temperature range codes "H", "C" and "D".

3] Frequency is recorded with two leading digits before the 'M' and 4 significant digits after the 'M' (including zeros).
[Ex. XXMXXXX (10M0000), XXMXXXX (16M3840)]

4] See Electrical Characteristics for Control Voltage range per Supply Voltage selected.

Not all performance combinations and frequencies may be available.
Contact your local CTS Representative or CTS Customer Service for availability.

M520 Standard Frequencies				
13.000000	16.368000	19.200000	26.000000	40.000000
16.367667	16.369000	20.000000	38.400000	

ELECTRICAL CHARACTERISTICS

	PARAMETER	SYMBOL	CONDITIONS	MIN	TYP	MAX	UNIT
ELECTRICAL PARAMETERS	Maximum Supply Voltage	V_{CC}	-	-0.5	-	6.0	V
	Maximum Control Voltage	V_C	-	-0.5	-	V_{CC}	V
	Storage Temperature	T_{STG}	-	-40	-	85	°C
	Frequency Range	f_O	Std frequencies listed in Ordering Information	10	-	52	MHz
	Frequency Stability	$\Delta f/f_O$	Frequency vs. Temperature Only	0.5, 1.0, 1.5 2.0, 2.5			± ppm
	Frequency Stability vs. Initial Calibration vs. Supply Voltage vs. Load vs. Reflow Shift vs. Aging	-	 @25°C ±5% change ±10% change After 2 reflows 1st year 10 year	 - - - - - -	 - - - - - -	 2.0 0.2 0.2 2.0 1.0 10.0	± ppm
	Operating Temperature Order Code 'W' Order Code 'H' Order Code 'C' Order Code 'D' Order Code 'I'	T_A	-	 0 -10 -20 -30 -40	 25	 55 60 70 85 85	°C
	Supply Voltage Order Code 'M' Order Code 'N' Order Code 'T' Order Code 'R' Order Code 'L'	V_{CC}	±5%	 1.77 2.38 2.66 2.85 3.14	 1.8 2.5 2.8 3.0 3.3	 1.83 2.63 2.94 3.15 3.47	V
	Supply Current	I_{CC}	10.00 MHz - 25.99 MHz 26.00 MHz - 52.00 MHz	- -	- -	2 2.5	mA
	Control Voltage	V_C	2.5V, 2.8V, 3.0V, 3.3V 1.8V	0.4 0.3	1.5 0.9	2.4 1.5	V
	Frequency Tuning [VCTCXO Only]	-	Specified V_C Range	5.0	-	-	± ppm
	V_C Input Impedance	ZV_C	-	500	-	-	kOhm
	Output Waveform		AC coupled Clipped Sinewave				
	Output Voltage Levels	V_O		0.8	-	-	Vp-p
	Output Load	R_L // C_L	-	10 kOhm // 10 pF			
	Start Up Time	T_S	-	-	-	2	ms
	Phase Noise	-	Varies based on output frequency. See example plot @ 19.2 MHz below.				dBc/Hz

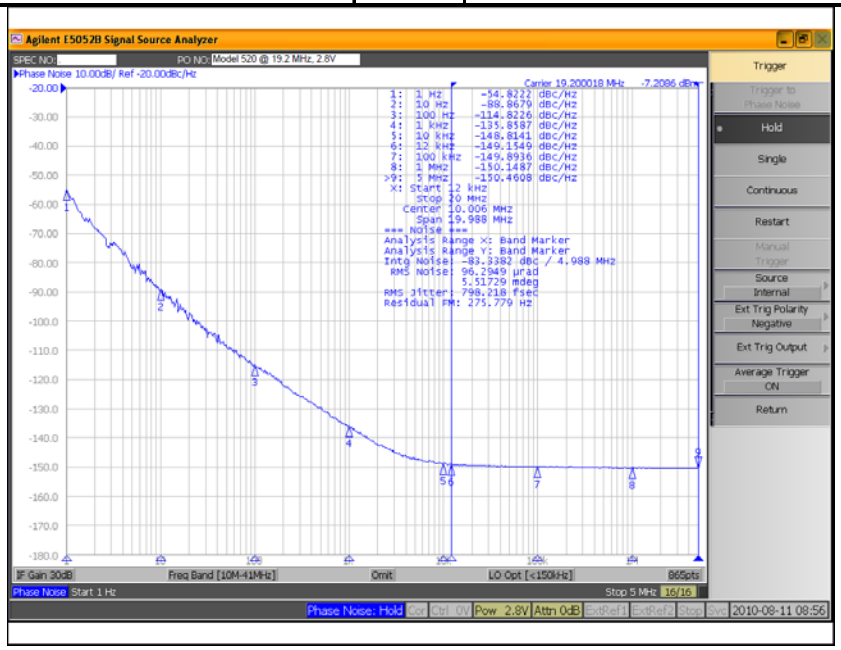

ELECTRICAL CHARACTERISTICS

D.U.T. PIN ASSIGNMENTS

PIN	SYMBOL	DESCRIPTION
1	V_C	GND – TCXO [Note 1] Control Voltage – VCTCXO
2	GND	Circuit & Package Ground
3	Output	Clipped Sine Wave Output [Note 2]
4	V_{CC}	Supply Voltage

NOTES
1. Connect to ground for TCXO (no AFC) option.
2. DC-Cut Capacitor Required.
   Add 1000pF capacitor between TCXO output and input of load.

TEST CIRCUIT – RL//CL LOAD

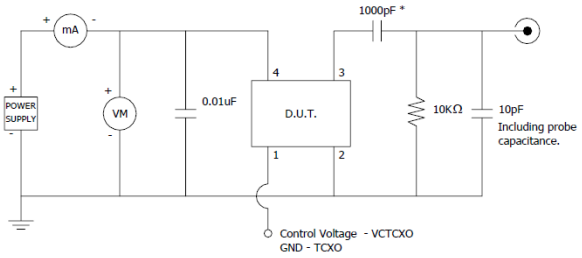

* DC-Cut Capacitor

MECHANICAL SPECIFICATIONS

PACKAGE DRAWING

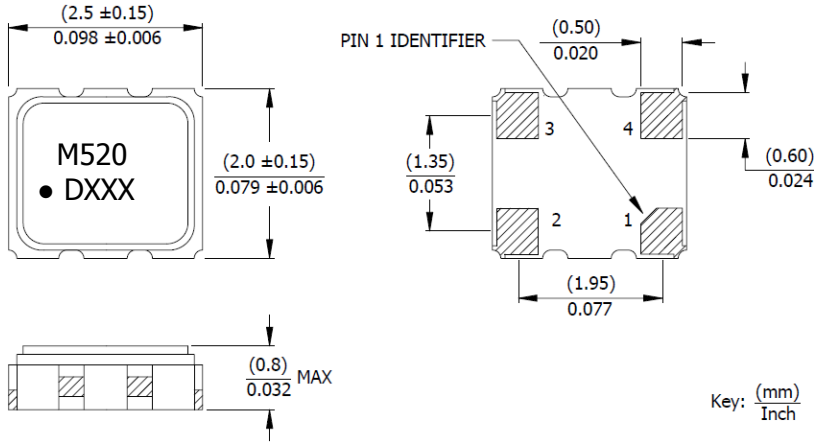

MARKING INFORMATION
1. M520 - CTS Model Series.
2. ● – Pin 1 identifier.
3. D – Date code. See Table I for codes.
4. XXX – Frequency code. Reference CTS document 016-1454-01.

Complete CTS part number, frequency value and date code information must appear on reel and carton labels.

NOTES
1. DO NOT make connections to non-labeled pins and castellations, as they may have internal connections used in the manufacturing process.
2. Termination pads (e4); barrier plating is nickel (Ni) with gold (Au) flash plate.
3. Reflow conditions per JEDEC J-STD-020, 260°C maximum.

SUGGESTED SOLDER PAD GEOMETRY

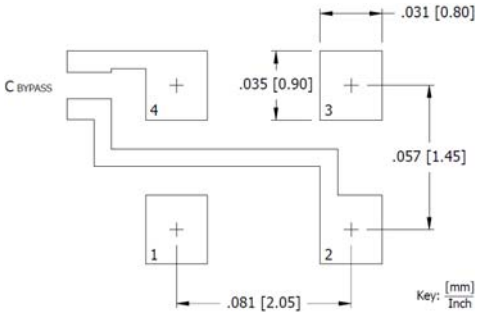

C_{BYPASS} should be ≥ 0.01 uF.

TABLE I – DATE CODE

YEAR \ MONTH					JAN	FEB	MAR	APR	MAY	JUN	JUL	AUG	SEP	OCT	NOV	DEC
2001	2005	2009	2013	2017	A	B	C	D	E	F	G	H	J	K	L	M
2002	2006	2010	2014	2018	N	P	Q	R	S	T	U	V	W	X	Y	Z
2003	2007	2011	2015	2019	a	b	c	d	e	f	g	h	j	k	l	m
2004	2008	2012	2016	2020	n	p	q	r	s	t	u	v	w	x	y	z

PACKAGING INFORMATION [Reference]

Device quantity is 1k pieces minimum and 3k maximum per 180mm reel.

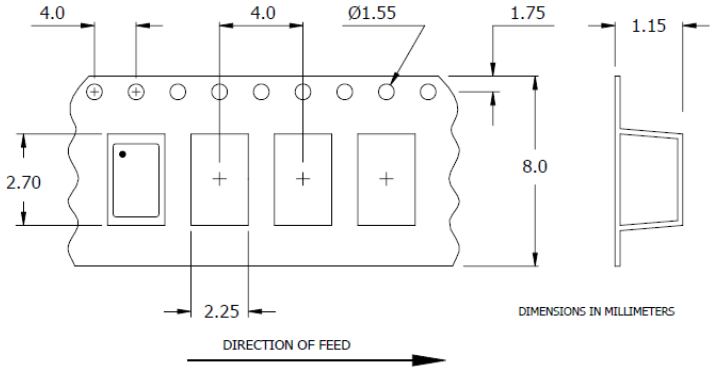

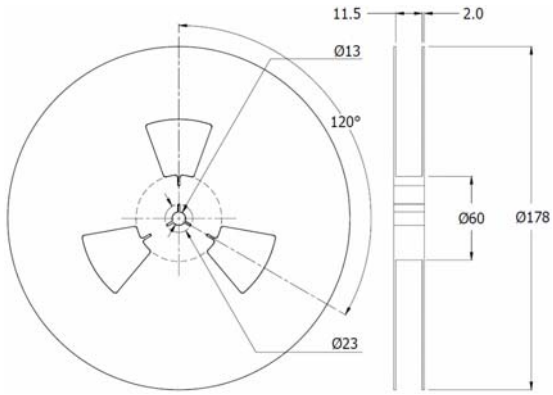

Компания «ЭлектроПласт» предлагает заключение долгосрочных отношений при поставках импортных электронных компонентов на взаимовыгодных условиях!

Наши преимущества:

- Оперативные поставки широкого спектра электронных компонентов отечественного и импортного производства напрямую от производителей и с крупнейших мировых складов;
- Поставка более 17-ти миллионов наименований электронных компонентов;
- Поставка сложных, дефицитных, либо снятых с производства позиций;
- Оперативные сроки поставки под заказ (от 5 рабочих дней);
- Экспресс доставка в любую точку России;
- Техническая поддержка проекта, помощь в подборе аналогов, поставка прототипов;
- Система менеджмента качества сертифицирована по Международному стандарту ISO 9001;
- Лицензия ФСБ на осуществление работ с использованием сведений, составляющих государственную тайну;
- Поставка специализированных компонентов (Xilinx, Altera, Analog Devices, Intersil, Interpoint, Microsemi, Aeroflex, Peregrine, Syfer, Eurofarad, Texas Instrument, Miteq, Cobham, E2V, MA-COM, Hittite, Mini-Circuits,General Dynamics и др.);

Помимо этого, одним из направлений компании «ЭлектроПласт» является направление «Источники питания». Мы предлагаем Вам помощь Конструкторского отдела:

- Подбор оптимального решения, техническое обоснование при выборе компонента;
- Подбор аналогов;
- Консультации по применению компонента;
- Поставка образцов и прототипов;
- Техническая поддержка проекта;
- Защита от снятия компонента с производства.

Как с нами связаться

Телефон: 8 (812) 309 58 32 (многоканальный)
Факс: 8 (812) 320-02-42
Электронная почта: org@eplast1.ru
Адрес: 198099, г. Санкт-Петербург, ул. Калинина, дом 2, корпус 4, литера А.