molex
one company › a world of innovation

This document was generated on 05/27/2010

PLEASE CHECK WWW.MOLEX.COM FOR LATEST PART INFORMATION

Part Number: 0746972502

Status: Active

Overview: vhdm__hsd

Description: 2.00mm (.079") Pitch 5-Row VHDM-HSD™ Backplane Header, Guide Pin Signal Module, Shield End Version, 100 Circuits, Pin Length 6.25mm (.246")

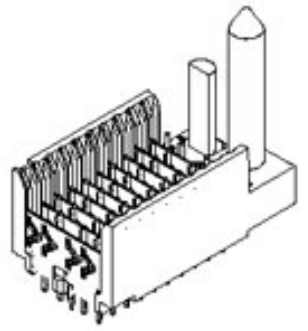

Series

image - Reference only

Documents:

Drawing (PDF) | RoHS Certificate of Compliance (PDF)

Agency Certification

CSA	LR19980

General

Product Family	Backplane Connectors
Series	74697
Application	Backplane
Application Tooling Documents	Tooling Manual
Comments	No Keying Position
Component Type	PCB Header
Overview	vhdm__hsd
Product Name	VHDM-HSD™
Style	N/A

Physical

Circuits (Loaded)	100
Circuits (maximum)	100
Color - Resin	Black
Durability (mating cycles max)	200
First Mate / Last Break	No
Flammability	94V-0
Guide to Mating Part	Yes
Keying to Mating Part	None
Material - Metal	High Performance Alloy (HPA), Stainless Steel
Material - Plating Mating	Gold
Material - Plating Termination	Tin-Lead
Material - Resin	High Temperature Thermoplastic
Number of Columns	25
Number of Pairs	Open Pin Field
Number of Rows	5
Orientation	Vertical
PCB Retention	None
PCB Thickness Recommended (in)	0.070 In
PCB Thickness Recommended (mm)	1.80 mm
Packaging Type	Tube
Pitch - Mating Interface (in)	0.079 In
Pitch - Mating Interface (mm)	2.00 mm
Plating min: Mating (µin)	30
Plating min: Mating (µm)	0.75
Plating min: Termination (µin)	30
Plating min: Termination (µm)	0.75
Polarized to PCB	Yes
Stackable	Yes
Surface Mount Compatible (SMC)	Yes
Temperature Range - Operating	-55°C to +105°C
Termination Interface: Style	Through Hole - Compliant Pin

EU RoHS
RoHS Compliant by Exemption
REACH SVHC
Not Reviewed
Halogen-Free Status
Not Reviewed

China RoHS

50
Pb

Need more information on product environmental compliance?

Email productcompliance@molex.com
For a multiple part number RoHS Certificate of Compliance, click here

Please visit the Contact Us section for any non-product compliance questions.

Search Parts in this Series
74697Series

Mates With
74670 HSD Daughtercard

Application Tooling | **FAQ**

Tooling specifications and manuals are found by selecting the products below. Crimp Height Specifications are then contained in the Application Tooling Specification document.

Global

Description	Product #
VHDM® Signal Pin Inserter Repair Tool	0622015700
VHDM® 5 Row Pin and Shield Repair Tool	0622015810
VHDM® 5 Row Shield Extraction Tool	0622016010
VHDM-HSD™ Signal Header, 5 Row by	0622020202

25 Wide, 50.00mm
(1.97")

Electrical

Current - Maximum per Contact	1A
Data Rate	5.0 Gbps
Real Signals (per 25mm)	48
Voltage - Maximum	120V AC (RMS)/DC

Material Info

Reference - Drawing Numbers

Packaging Specification	PK-74696-003
Sales Drawing	SD-74697-002

VHDM-HSD is a trademark of Amphenol Corporation

This document was generated on 05/27/2010

PLEASE CHECK WWW.MOLEX.COM FOR LATEST PART INFORMATION

74697

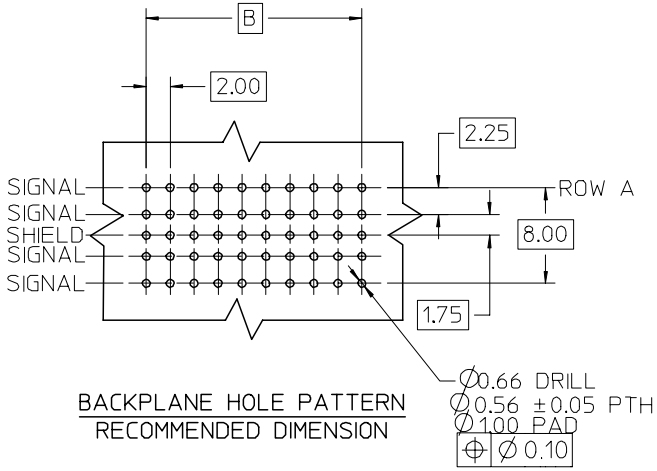

BACKPLANE HOLE PATTERN
RECOMMENDED DIMENSION

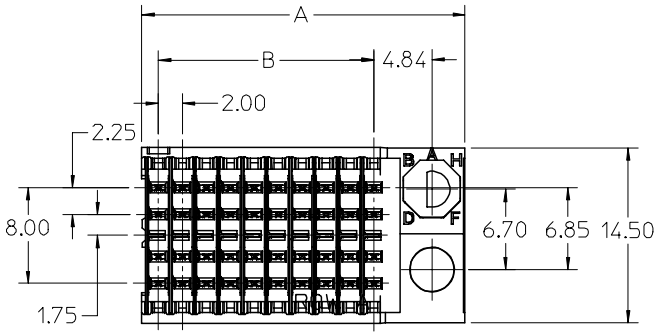

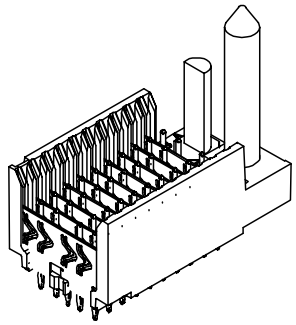

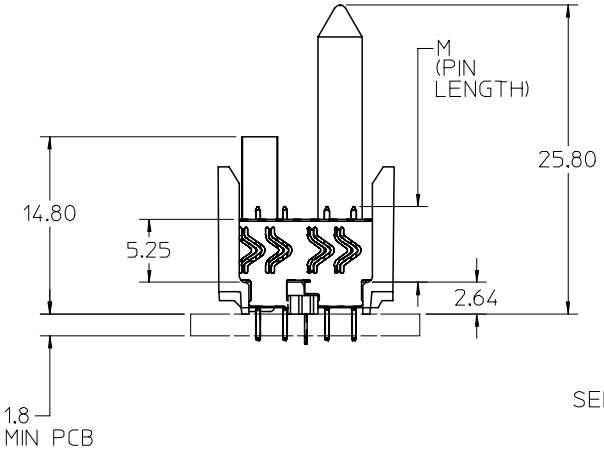

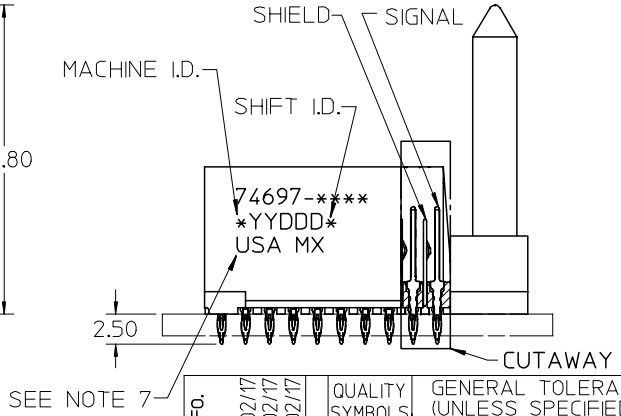

NOTES:

1. MATERIAL: HOUSING -LIQUID CRYSTAL POLYMER (LCP) GLASS-FILLED. UL 94 V-0. COLOR BLACK. SIGNAL & SHIELD -COPPER ALLOY.
2. FINISHES: SELECTIVE GOLD (Au) ON CONTACT AREA. SELECTIVE TIN/LEAD (Sn/Pb) OR SELECTIVE MATTE TIN (Sn) ON PCB TAILS. NICKEL (Ni) OVERALL.
3. THIS PART CONFORMS TO MOLEX PRODUCT SPECIFICATION PS-74031-999.
4. FOR MIXED CONTACT MATING LENGTHS CONSULT MOLEX FOR AVAILABILITY.
5. FOR SPECIFIC PART NUMBER AND MATING INFORMATION REFER TO SHEET 2.
6. PACKAGE PER: PK-74696-003.
7. EITHER MARK PART NUMBER AND DATE CODE APPROXIMATELY WHERE SHOWN OR PLACE LABEL ON THE TUBE.

ADDED LEAD-FREE INFO.	EC NO: UCP2006-1744	DRWN:CTHOMAS 2006/02/17	CH'KD:JBINGHAM 2006/02/17	APPR:KMULVEY 2006/02/17
REV: D	DESCRIPTION		

QUALITY SYMBOLS: ▼ = 0; (C) = 0

GENERAL TOLERANCES (UNLESS SPECIFIED)

	mm	INCH
4 PLACES	± ---	± ---
3 PLACES	± ---	± ---
2 PLACES	± ---	± ---
1 PLACE	± ---	± ---
ANGULAR ±1/2°		

DRAFT WHERE APPLICABLE MUST REMAIN WITHIN DIMENSIONS

SCALE 2.5:1	DESIGN UNITS METRIC	THIRD ANGLE PROJECTION	REVISE ON CAD ONLY
DIMENSION STYLE MM ONLY		TITLE HSD SALES ASSEMBLY 5 ROW SHIELD END BACKPLANE	
DRAWN BY MQWANG	DATE 2001/04/17		
CHECKED BY NMARTIN	DATE 2001/04/20	molex MOLEX INCORPORATED	
APPROVED BY CBIXLER	DATE 2001/04/20	MATERIAL NO. SEE SHT.2&3	DOCUMENT NO. SD-74697-002 / SHEET NO. 1 OF 3

THIS DRAWING CONTAINS INFORMATION THAT IS PROPRIETARY TO MOLEX INCORPORATED AND SHOULD NOT BE USED WITHOUT WRITTEN PERMISSION B

74697

P/N 74697-( )	-**0-	-**1-	-**2-	-**3-	-**4-	-**5-	-**6-	-**7-	-**8-
KEYING PIN ORIENTATION	0	A	B	C	D	E	F	G	H

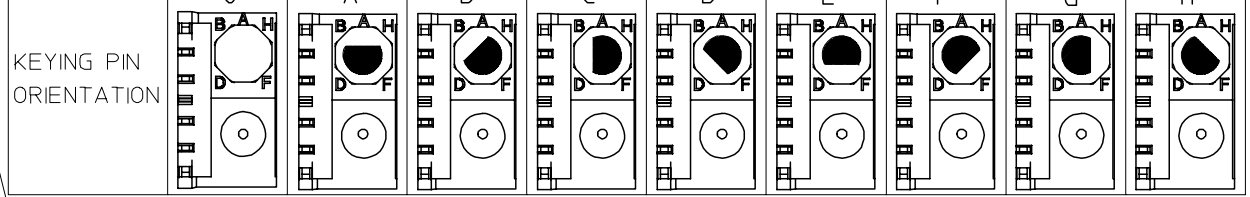

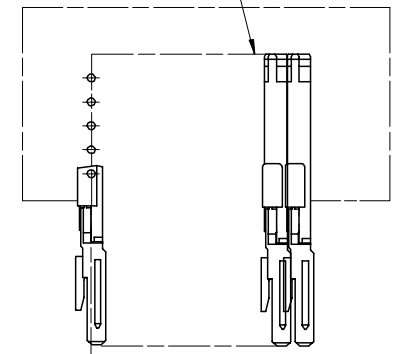

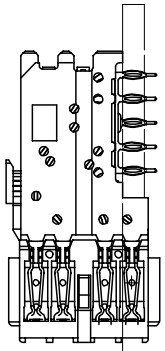

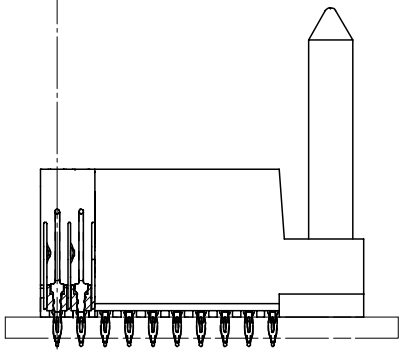

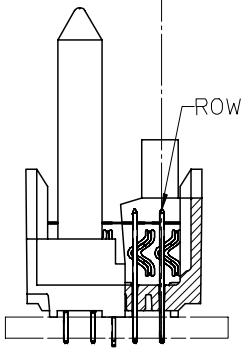

74697-****

NUMBER OF COLUMNS/PLATING
05 = 05 COLUMN TIN/LEAD
10 = 10 COLUMN TIN/LEAD
25 = 25 COLUMN TIN/LEAD
95 = 05 COLUMN MATTE TIN
90 = 10 COLUMN MATTE TIN
85 = 25 COLUMN MATTE TIN

CONTACT LOAD (PIN LENGTH)
1 & 6 = 4.75
2 & 7 = 6.25
3 & 8 = 4.25
4 & 9 = 5.15

ADDED LEAD-FREE INFO.
EC NO: UCP2006-1744
DRWN:CTHOMAS 2006/02/17
CH'KD:JBINGHAM 2006/02/17
APPR:KMULVEY 2006/02/17
DESCRIPTION
REV D

QUALITY SYMBOLS
▼ = 0
▽ = 0

GENERAL TOLERANCES (UNLESS SPECIFIED)

	mm	INCH
4 PLACES	± ---	± ---
3 PLACES	± ---	± ---
2 PLACES	± ---	± ---
1 PLACE	± ---	± ---
ANGULAR ±1/2°		

DRAFT WHERE APPLICABLE MUST REMAIN WITHIN DIMENSIONS

SCALE 2.5:1
DESIGN UNITS METRIC
THIRD ANGLE PROJECTION
REVISE ON CAD ONLY
DIMENSION STYLE MM ONLY
DRAWN BY MQWANG DATE 2001/04/17
CHECKED BY NMARTIN DATE 2001/04/20
APPROVED BY CBIXLER DATE 2001/04/20

TITLE
HSD SALES ASSEMBLY
5 ROW SHIELD END
BACKPLANE

molex MOLEX INCORPORATED

MATERIAL NO. SEE TABLES
DOCUMENT NO. SD-74697-002
SHEET NO. 2 OF 3

THIS DRAWING CONTAINS INFORMATION THAT IS PROPRIETARY TO MOLEX INCORPORATED AND SHOULD NOT BE USED WITHOUT WRITTEN PERMISSION

B

tb_frame_B
rev. B1 2000/08/01

PART NUMBER	COLUMN	NUMBER OF SIGNAL PINS	NUMBER OF SHIELDS	A	B	M	Au (um) MIN THICKNESS	Sn/Pb (um) THICKNESS
74697-10*1	10	40	10	27.00	18.00	4.75	0.76	0.76-1.52
74697-10*6							1.27	
74697-25*1	25	100	25	57.00	48.00		0.76	
74697-25*6							1.27	
74697-05*7	5	20	5	17.00	8.00	6.25	1.27	
74697-10*2	10	40	10	27.00	18.00		0.76	
74697-10*7							1.27	
74697-25*2	25	100	25	57.00	48.00		0.76	
74697-25*7							1.27	
74697-10*3	10	40	10	27.00	18.00	4.25	0.76	
74697-10*8							1.27	
74697-25*3	25	100	25	57.00	48.00		0.76	
74697-25*8							1.27	
74697-10*4	10	40	10	27.00	18.00	5.15	0.76	
74697-10*9							1.27	
74697-25*4	25	100	25	57.00	48.00		0.76	
74697-25*9							1.27	

TIN/LEAD P/N CHART

PART NUMBER	COLUMN	NUMBER OF SIGNAL PINS	NUMBER OF SHIELDS	A	B	M	Au (um) MIN THICKNESS	Sn (um) THICKNESS
74697-90*1	10	40	10	27.00	18.00	4.75	0.76	0.76-1.52
74697-90*6							1.27	
74697-85*1	25	100	25	57.00	48.00		0.76	
74697-85*6							1.27	
74697-95*7	5	20	5	17.00	8.00	6.25	1.27	
74697-90*2	10	40	10	27.00	18.00		0.76	
74697-90*7							1.27	
74697-85*2	25	100	25	57.00	48.00		0.76	
74697-85*7							1.27	
74697-90*3	10	40	10	27.00	18.00	4.25	0.76	
74697-90*8							1.27	
74697-85*3	25	100	25	57.00	48.00		0.76	
74697-85*8							1.27	
74697-90*4	10	40	10	27.00	18.00	5.15	0.76	
74697-90*9							1.27	
74697-85*4	25	100	25	57.00	48.00		0.76	
74697-85*9							1.27	

LEAD FREE P/N CHART

ADDED SHEET:3
EC NO: UCP2006-1744
DRWN:CTHOMAS 2006/02/17
CHKD:JBINGHAM 2006/02/17
APPR:KMULVEY 2006/02/17
DESCRIPTION
REV D

QUALITY SYMBOLS
▼=0
(C)=0

GENERAL TOLERANCES (UNLESS SPECIFIED)

	mm	INCH
4 PLACES	± ---	± ---
3 PLACES	± ---	± ---
2 PLACES	± ---	± ---
1 PLACE	± ---	± ---
ANGULAR ±1/2°		

DRAFT WHERE APPLICABLE MUST REMAIN WITHIN DIMENSIONS

DIMENSION STYLE: MM ONLY
SCALE: 2.5:1
DESIGN UNITS: METRIC
THIRD ANGLE PROJECTION

DRAWN BY: MQWANG DATE: 2001/04/17
CHECKED BY: NMARTIN DATE: 2001/04/20
APPROVED BY: CBIXLER DATE: 2001/04/20

TITLE: HSD SALES ASSEMBLY 5 ROW SHIELD END BACKPLANE

molex MOLEX INCORPORATED

MATERIAL NO.: SEE TABLES
DOCUMENT NO.: SD-74697-002
SHEET NO.: 3 OF 3
SIZE: C

THIS DRAWING CONTAINS INFORMATION THAT IS PROPRIETARY TO MOLEX INCORPORATED AND SHOULD NOT BE USED WITHOUT WRITTEN PERMISSION

Компания «ЭлектроПласт» предлагает заключение долгосрочных отношений при поставках импортных электронных компонентов на взаимовыгодных условиях!

Наши преимущества:

- Оперативные поставки широкого спектра электронных компонентов отечественного и импортного производства напрямую от производителей и с крупнейших мировых складов;
- Поставка более 17-ти миллионов наименований электронных компонентов;
- Поставка сложных, дефицитных, либо снятых с производства позиций;
- Оперативные сроки поставки под заказ (от 5 рабочих дней);
- Экспресс доставка в любую точку России;
- Техническая поддержка проекта, помощь в подборе аналогов, поставка прототипов;
- Система менеджмента качества сертифицирована по Международному стандарту ISO 9001;
- Лицензия ФСБ на осуществление работ с использованием сведений, составляющих государственную тайну;
- Поставка специализированных компонентов (Xilinx, Altera, Analog Devices, Intersil, Interpoint, Microsemi, Aeroflex, Peregrine, Syfer, Eurofarad, Texas Instrument, Miteq, Cobham, E2V, MA-COM, Hittite, Mini-Circuits,General Dynamics и др.);

Помимо этого, одним из направлений компании «ЭлектроПласт» является направление «Источники питания». Мы предлагаем Вам помощь Конструкторского отдела:

- Подбор оптимального решения, техническое обоснование при выборе компонента;
- Подбор аналогов;
- Консультации по применению компонента;
- Поставка образцов и прототипов;
- Техническая поддержка проекта;
- Защита от снятия компонента с производства.

Как с нами связаться

Телефон: 8 (812) 309 58 32 (многоканальный)
Факс: 8 (812) 320-02-42
Электронная почта: org@eplast1.ru
Адрес: 198099, г. Санкт-Петербург, ул. Калинина, дом 2, корпус 4, литера А.