LOW CATHODE CURRENT ADJUSTABLE PRECISION SHUNT REGULATOR

Description

The AP431i is a 3-terminal adjustable shunt regulator with guaranteed thermal stability over a full operation range. It features sharp turn-on characteristics, low temperature coefficient and low output impedance, which makes it ideal substitute for Zener diode in applications such as switching power supply, charger and other adjustable regulators.

The AP431i has the same electrical specifications as the industry standard 431 except that it features a low minimum cathode current for regulation. The typical value of 50µA makes the parts ideal for very low power dissipation applications.

The output voltage of AP431i can be set to any value between V_{REF} (2.5V/2.495V) and the corresponding maximum cathode voltage (36V).

The AP431i is offered in two grade initial voltage tolerance at +25°C, 0.5% and 1%.

This IC is available in 3 packages: TO-92 (ammo packing), SOT-23 and SOT-89.

Features

- Low Minimum Cathode Current for Regulation: 50µA (Typ.), 100µA (Max.)
- Programmable Precise Output Voltage from 2.5V/2.495V to 36V
- High Stability Under Capacitive Load
- Low Deviation of Reference Voltage Over Full Temperature Range: 11mV Typical (-40°C to +125°C)
- Sink Current Capacity from 100µA to 100mA
- Low Dynamic Impedance: 0.1Ω (Typ.)
- Wide Operating Temperature Range: -40°C to +125°C
- **Totally Lead-Free & Fully RoHS Compliant (Notes 1 & 2)**
- **Halogen and Antimony Free. "Green" Device (Note 3)**

Pin Assignments

(Top View)

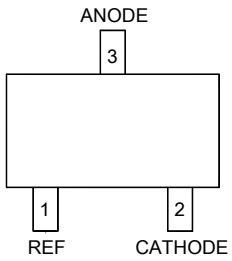

SOT-23 (Package Code: N)

(Top View)

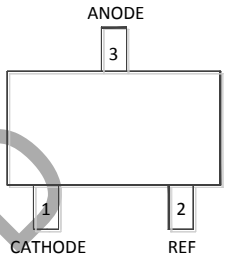

SOT-23 (Package Code: N1)

(Top View)

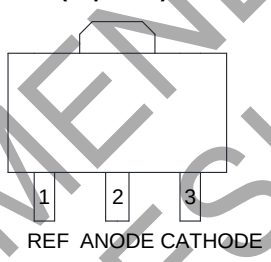

SOT-89 (Option 1)

(Top View)

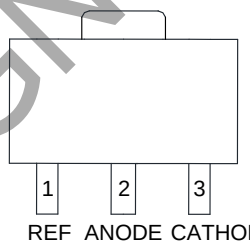

SOT-89 (Option 2)

(Top View)

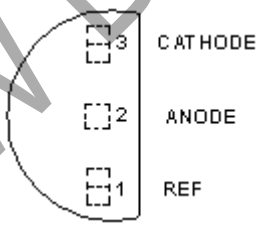

TO-92 (Ammo Packing)

Applications

- Charger
- Voltage Adapter
- Switching Power Supply
- Graphic Card
- Precision Voltage Reference

Notes:
1. No purposely added lead. Fully EU Directive 2002/95/EC (RoHS) & 2011/65/EU (RoHS 2) compliant.
2. See http://www.diodes.com/quality/lead_free.html for more information about Diodes Incorporated's definitions of Halogen- and Antimony-free, "Green" and Lead-free.
3. Halogen- and Antimony-free "Green" products are defined as those which contain <900ppm bromine, <900ppm chlorine (<1500ppm total Br + Cl) and <1000ppm antimony compounds.

NOT RECOMMENDED FOR NEW DESIGN

© Diodes Incorporated

Typical Applications Circuit

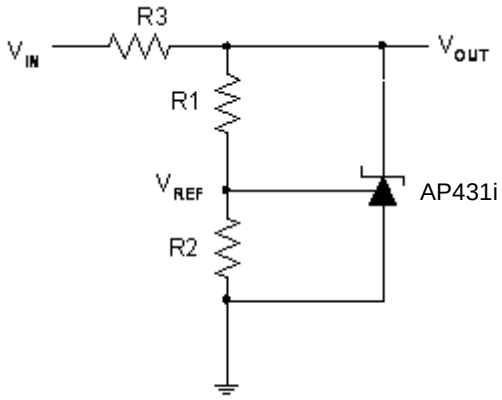

$V_{OUT}=(1+R1/R2) \times V_{REF}$

Shunt Regulator

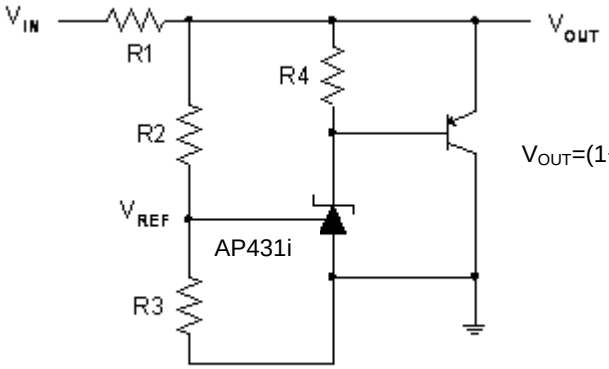

$V_{OUT}=(1+R2/R3) \times V_{REF}$

High Current Shunt Regulator

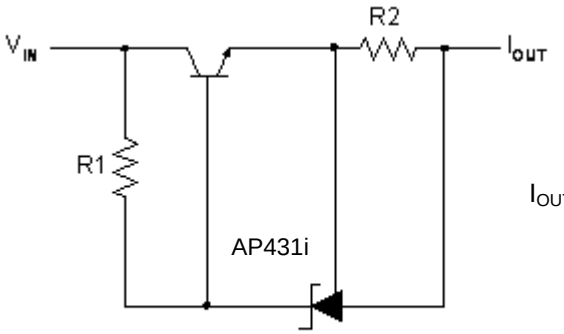

$I_{OUT}=V_{REF}/R2+I_{KA}$

Current Source or Current Limit

NOT RECOMMENDED FOR NEW DESIGN

© Diodes Incorporated

Typical Applications Circuit (Cont.)

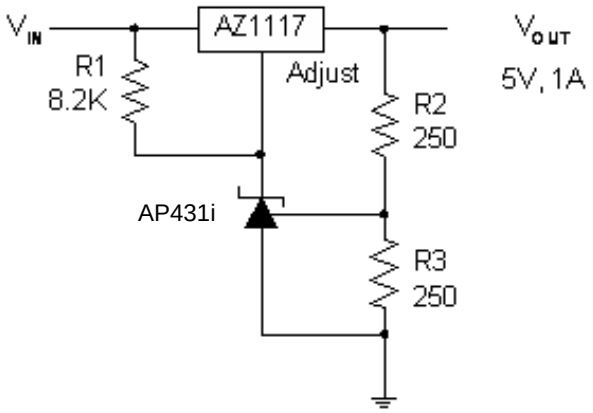

Precision 5V 1A Regulator

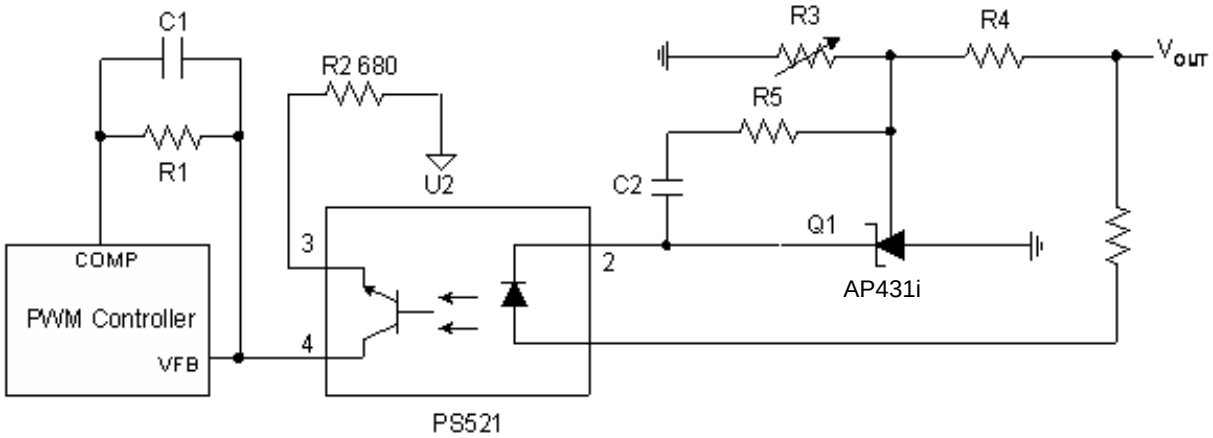

PWM Converter with Reference

NOT RECOMMENDED FOR NEW DESIGN

© Diodes Incorporated

Functional Block Diagram

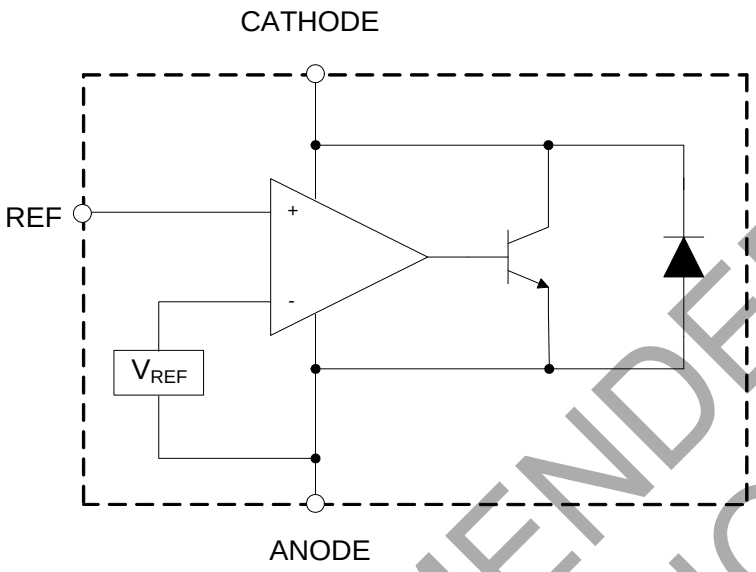

Absolute Maximum Ratings (Note 4)

Symbol	Parameter	Rating		Unit
V_{KA}	Cathode Voltage	40		V
I_{KA}	Cathode Current Range (Continuous)	-100 to 150		mA
I_{REF}	Reference Input Current Range	10		mA
P_D	Power Dissipation	TO-92	750	mW
		SOT-89	750	
		SOT-23	350	
T_J	Junction Temperature	+150		°C
T_{STG}	Storage Temperature Range	-65 to +150		°C
ESD	ESD (Human Body Model)	5,500		V
ESD	ESD (Machine Model)	300		V

Note 4: Stresses greater than those listed under "Absolute Maximum Ratings" may cause permanent damage to the device. These are stress ratings only, and functional operation of the device at these or any other conditions beyond those indicated under "Recommended Operating Conditions" is not implied. Exposure to "Absolute Maximum Ratings" for extended periods may affect device reliability.

Recommended Operating Conditions

Symbol	Parameter	Min	Max	Unit
V_{KA}	Cathode Voltage	V_{REF}	36	V
I_{KA}	Cathode Current	0.1	100	mA
T_A	Operating Ambient Temperature Range	-40	+125	°C

NOT RECOMMENDED FOR NEW DESIGN

© Diodes Incorporated

Electrical Characteristics (T_A = +25°C, unless otherwise specified.)

Symbol	Parameter		Test Circuit	Conditions		Min	Typ	Max	Unit
V_{REF}	Reference Voltage	0.5%	4	$V_{KA} = V_{REF}$, I_{KA} = 1mA (AP431iA)		2.487	2.500	2.512	V
				$V_{KA} = V_{REF}$, I_{KA} = 1mA (AP431iHA)		2.483	2.495	2.507	
		1.0%		$V_{KA} = V_{REF}$, I_{KA} = 1mA (AP431iB)		2.475	2.500	2.525	
				$V_{KA} = V_{REF}$, I_{KA} = 1mA (AP431iHB)		2.470	2.495	2.520	
ΔV_{REF}	Deviation of Reference Voltage Over Full Temperature Range		4	$V_{KA} = V_{REF}$ I_{KA} = 1mA	0 to +70°C	—	3	6	mV
					-40 to +85°C	—	6	10	
					-40 to +125°C	—	11	18	
$\frac{\Delta V_{REF}}{\Delta V_{KA}}$	Ratio of Change in Reference Voltage to the Change in Cathode Voltage		5	I_{KA} = 1mA	ΔV_{KA} = 10V to V_{REF}	—	-1.0	-2.7	mV/V
					ΔV_{KA} = 36V to 10V	—	-0.5	-2.0	
I_{REF}	Reference Current		5	I_{KA} = 1mA, R1 = 10kΩ, R2 = ∞		—	0.2	0.5	µA
ΔI_{REF}	Deviation of Reference Current Over Full Temperature Range		5	I_{KA} = 1mA, R1 = 10kΩ R2 = ∞, T_A = -40 to +125°C		—	0.1	0.3	µA
I_{KA} (Min)	Minimum Cathode Current for Regulation		4	$V_{KA} = V_{REF}$		—	50	100	µA
I_{KA} (Off)	Off-state Cathode Current		6	V_{KA} = 36V, V_{REF} = 0		—	0.05	1.0	µA
Z_{KA}	Dynamic Impedance		4	$V_{KA} = V_{REF}$, I_{KA} = 1 to 100mA, f ≤ 1.0kHz		—	0.1	0.3	Ω
θ_{JC}	Thermal Resistance		—	TO-92		—	80	—	°C/W
				SOT-89		—	80	—	
				SOT-23		—	140	—	

NOT RECOMMENDED FOR NEW DESIGN

© Diodes Incorporated

Electrical Characteristics (Cont.)

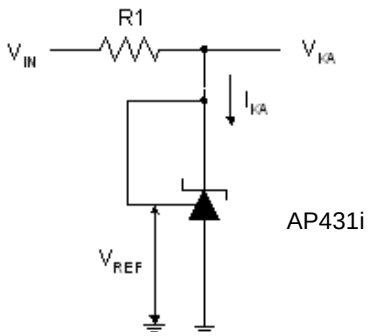

Test Circuit 4 for $V_{KA} = V_{REF}$

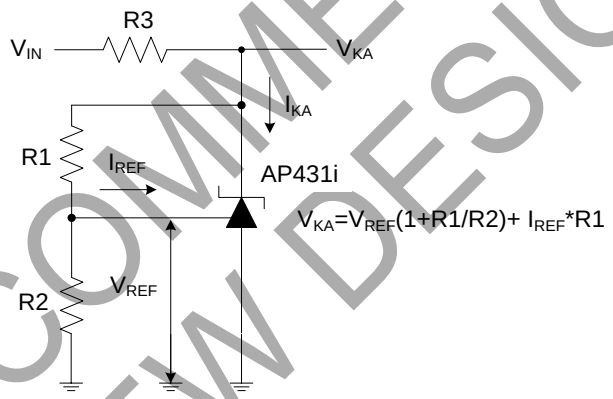

Test Circuit 5 for $V_{KA} > V_{REF}$

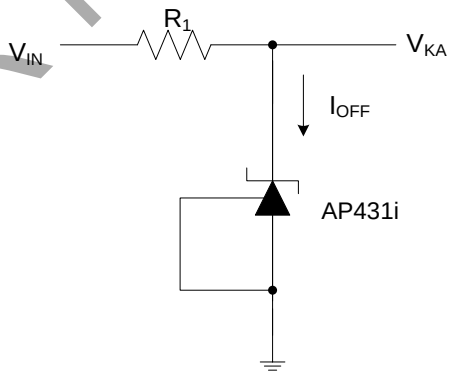

Test Circuit 6 for I_{OFF}

NOT RECOMMENDED FOR NEW DESIGN

© Diodes Incorporated

Performance Characteristics

Reference Voltage vs. Ambient Temperature

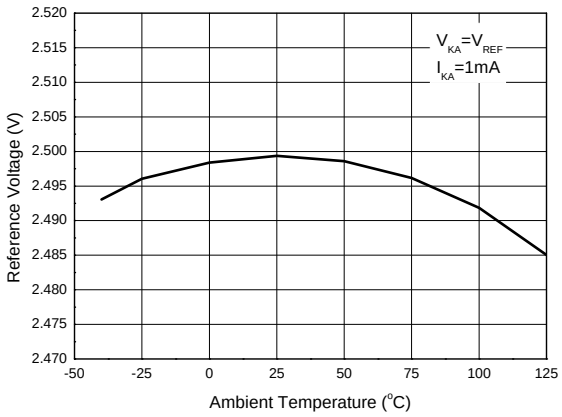

Reference Current vs. Ambient Temperature

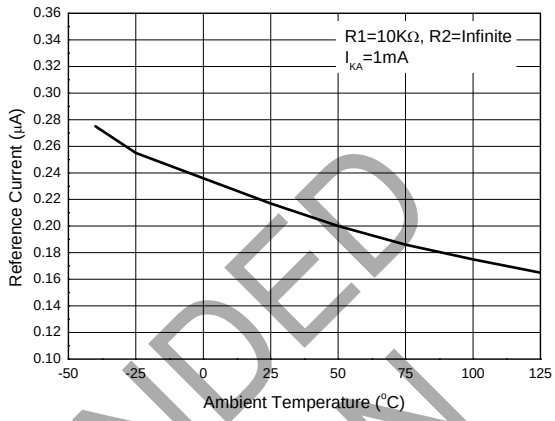

Minimal Cathode Current for Regulation

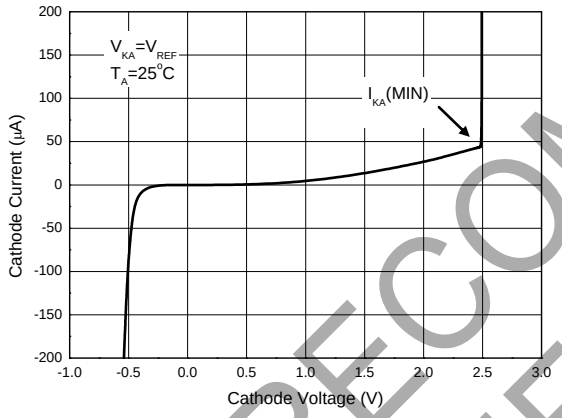

Minimal Cathode Current for Regulation at Different Ambient Temperature

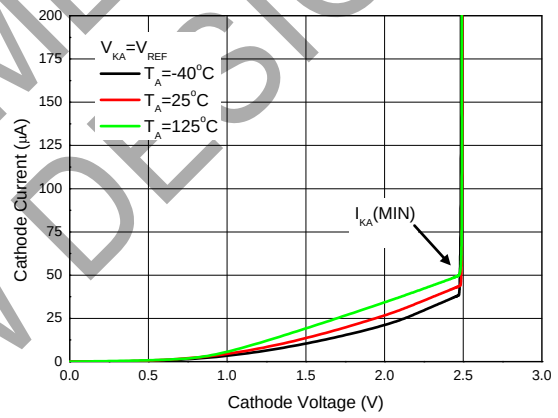

Cathode Current vs. Cathode Voltage

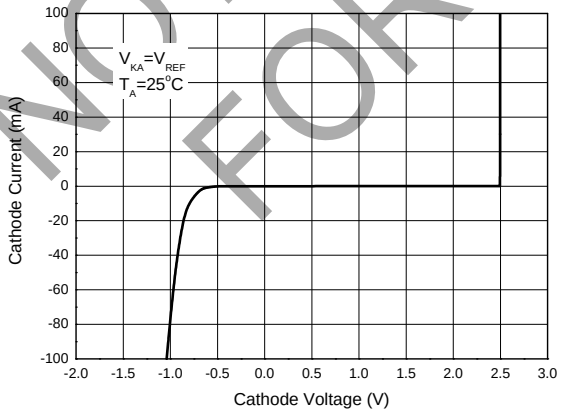

Ratio of Delta Reference Voltage to Delta Cathode Voltage vs. Case Temperature

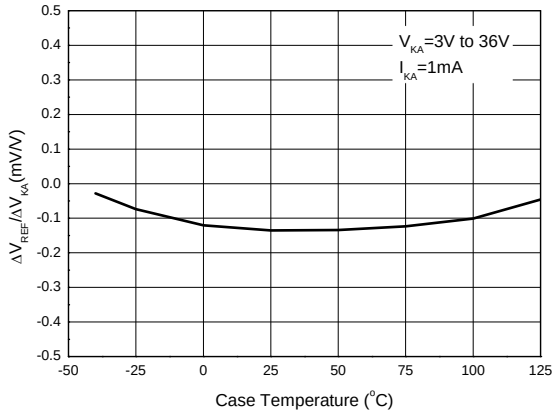

NOT RECOMMENDED FOR NEW DESIGN

© Diodes Incorporated

Performance Characteristics (Cont.)

Off-state Cathode Current vs. Ambient Temperature

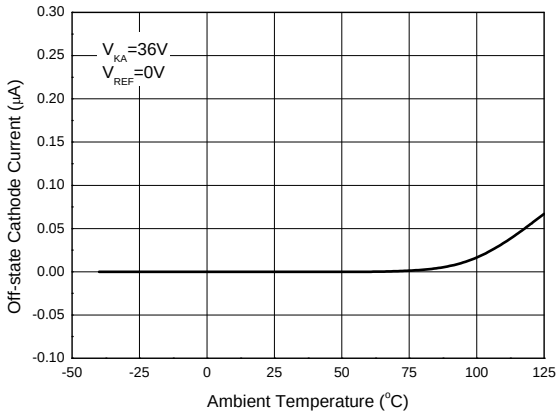

Small Signal Voltage Gain vs. Frequency

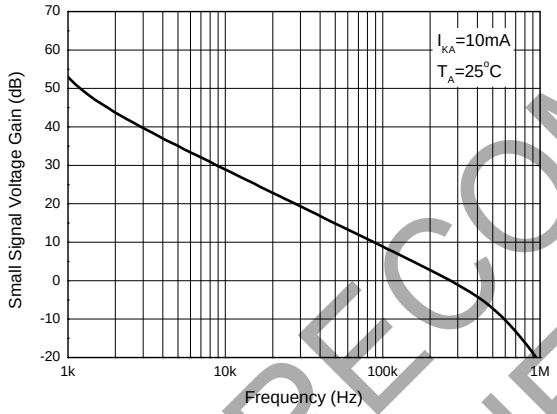

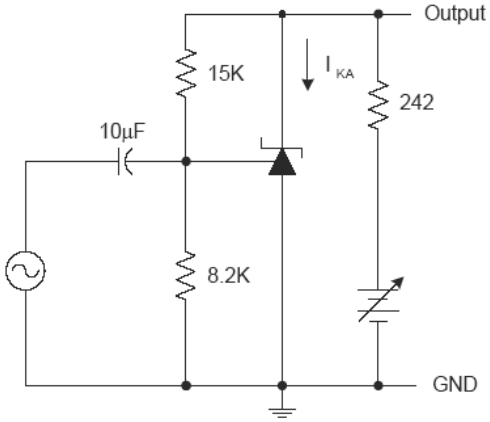

Stability Boundary Conditions

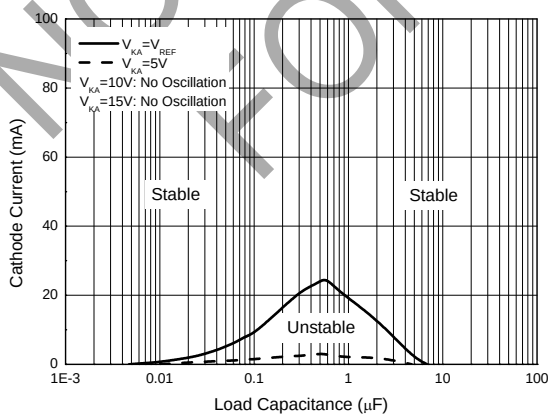

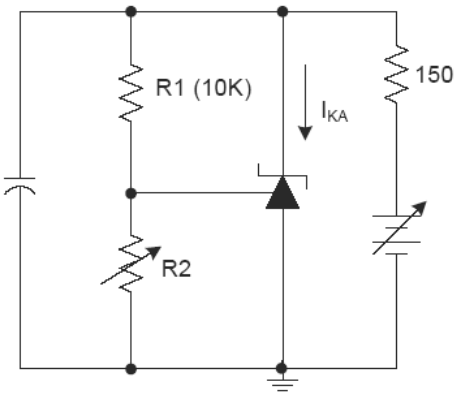

NOT RECOMMENDED FOR NEW DESIGN

© Diodes Incorporated

Performance Characteristics (Cont.)

Pulse Response

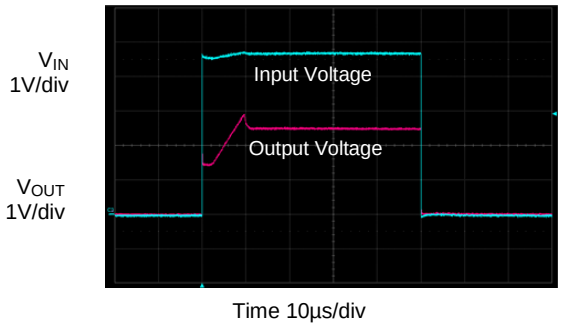

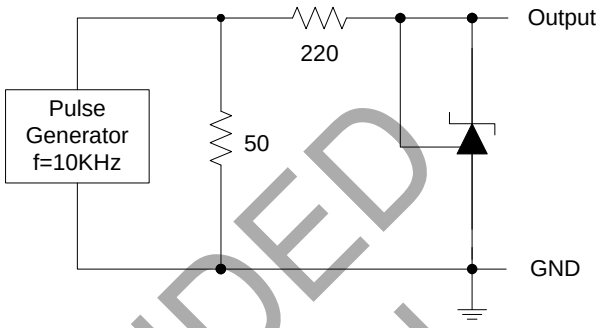

NOT RECOMMENDED FOR NEW DESIGN

© Diodes Incorporated

Ordering Information

AP431i XX XX XX - XX

Product Name	Voltage Tolerance	Package	Packing	RoHS/Green
	A : 2.5V/ 0.5% B : 2.5V/1.0% HA : 2.495V/0.5% HB : 2.495V/1.0%	N/N1 : SOT-23 R : SOT-89 Z : TO-92	TR: Tape & Reel or Ammo	G1 : Green

Package	Package Code	Temperature Range	Voltage Tolerance	Part Number	Marking ID	Packing
SOT-23	N	-40 to +125°C	0.5%	AP431iANTR-G1	GCA	3,000/Tape & Reel
	N1		0.5%	AP431iAN1TR-G1	GCC	
	N		0.5%	AP431iHANTR-G1	GCD	
	N1		0.5%	AP431iHAN1TR-G1	GCE	
	N		1.0%	AP431iBNTR-G1	GCB	
	N1		1.0%	AP431iBN1TR-G1	GCF	
	N		1.0%	AP431iHBNTR-G1	GCG	
	N1		1.0%	AP431iHBN1TR-G1	GCH	
SOT-89	R	-40 to +125°C	0.5%	AP431iARTR-G1	G33M	1,000/Tape & Reel
	R		0.5%	AP431iHARTR-G1	G37M	
	R		1.0%	AP431iBRTR-G1	G33R	
	R		1.0%	AP431iHBRTR-G1	G33S	
TO-92	Z	-40 to +125°C	0.5%	AP431iAZTR-G1	AP431iAZ-G1	2,000/Ammo
	Z		0.5%	AP431iHAZTR-G1	AP431iHAZ-G1	
	Z		1.0%	AP431iBZTR-G1	AP431iBZ-G1	
	Z		1.0%	AP431iHBZTR-G1	AP431iHBZ-G1	

NOT RECOMMENDED FOR NEW DESIGN

© Diodes Incorporated

Marking Information

(1) TO-92 (Ammo Packing)

(Front View)

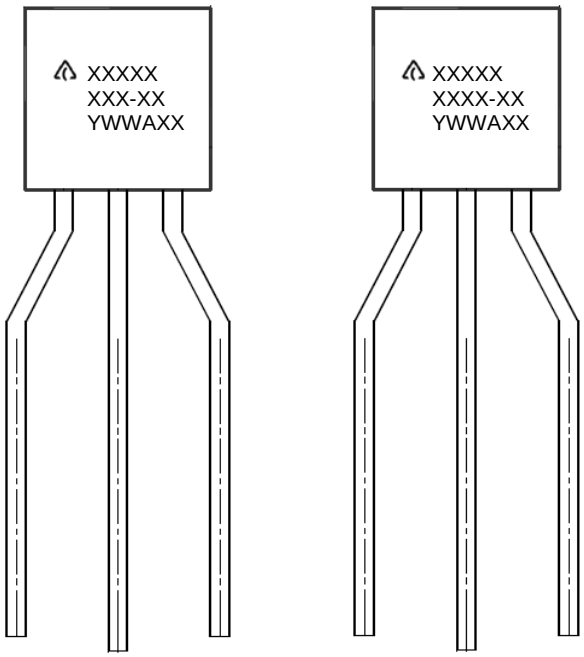

First and Second Lines: Logo and Marking ID
(See Ordering Information)
Third Line: Date Code
Y: Year
WW: Work Week of Molding
A: Assembly House Code
XX: Internal Code

(2) SOT-23

(Top View)

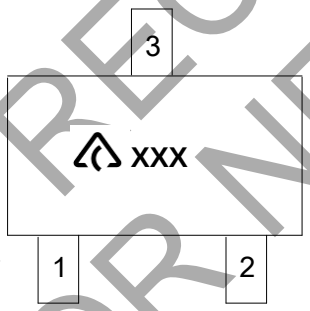

: Logo
XXX: Marking ID (See Ordering Information)

(3) SOT-89

(Top View)

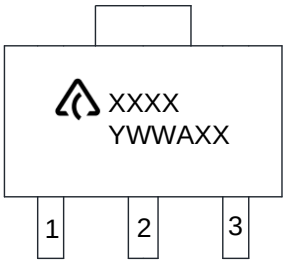

First Line: Logo and Marking ID
(See Ordering Information)
Second Line: Date Code
Y: Year
WW: Work Week of Molding
A: Assembly House Code
XX: Internal Code

NOT RECOMMENDED FOR NEW DESIGN

© Diodes Incorporated

Package Outline Dimensions (All dimensions in mm (inch).)

(1) Package Type: TO-92 (Ammo Packing)

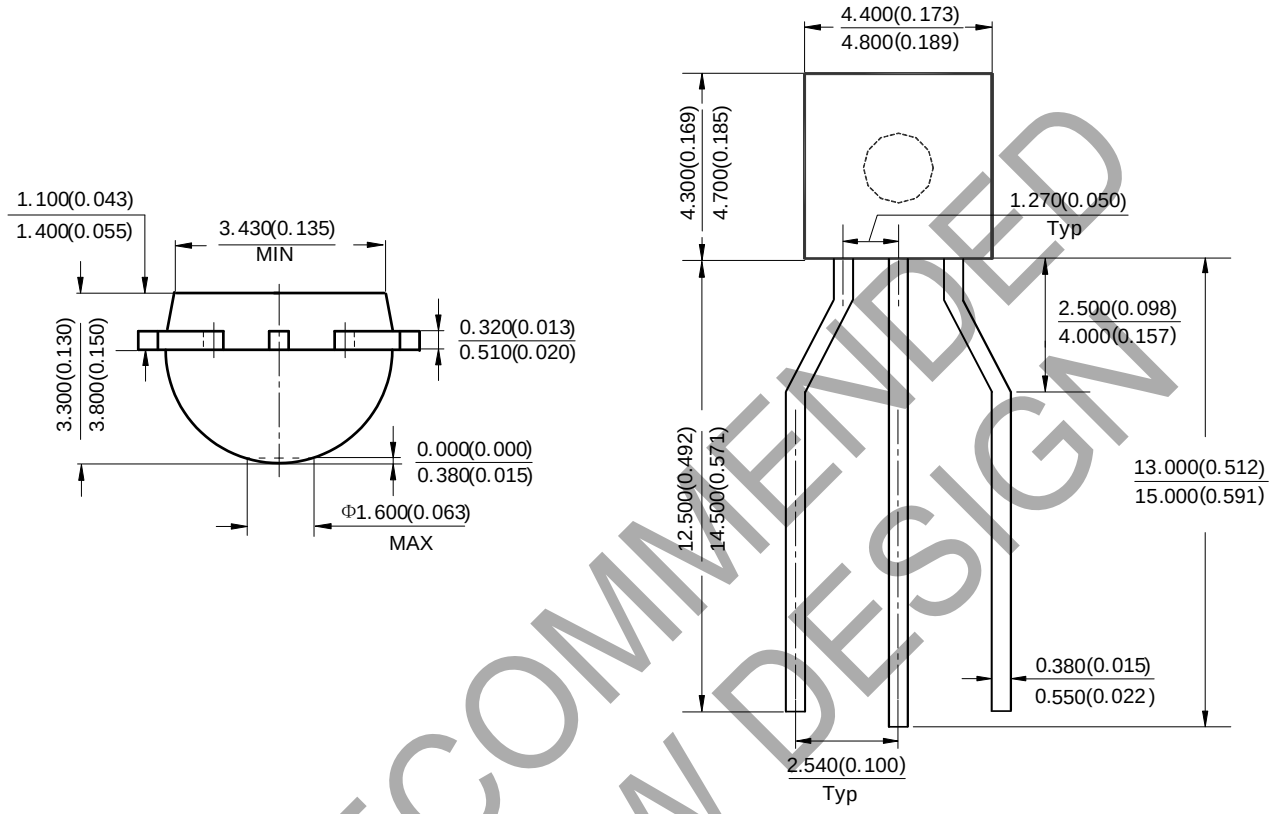

NOT RECOMMENDED FOR NEW DESIGN

© Diodes Incorporated

Package Outline Dimensions (Cont.) (All dimensions in mm(inch).)

(2) Package Type: SOT-23

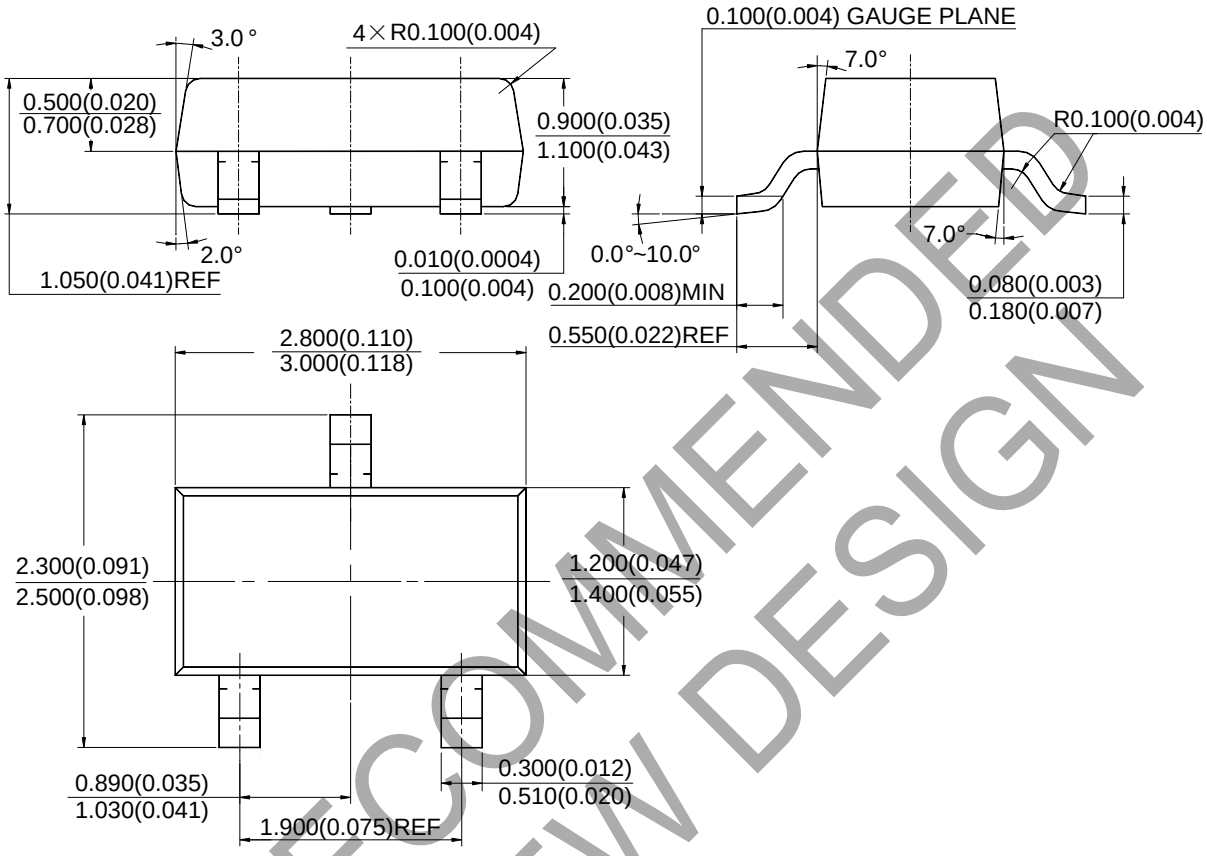

NOT RECOMMENDED FOR NEW DESIGN

© Diodes Incorporated

Package Outline Dimensions (Cont.) (All dimensions in mm(inch).)

(3) Package Type: SOT-89

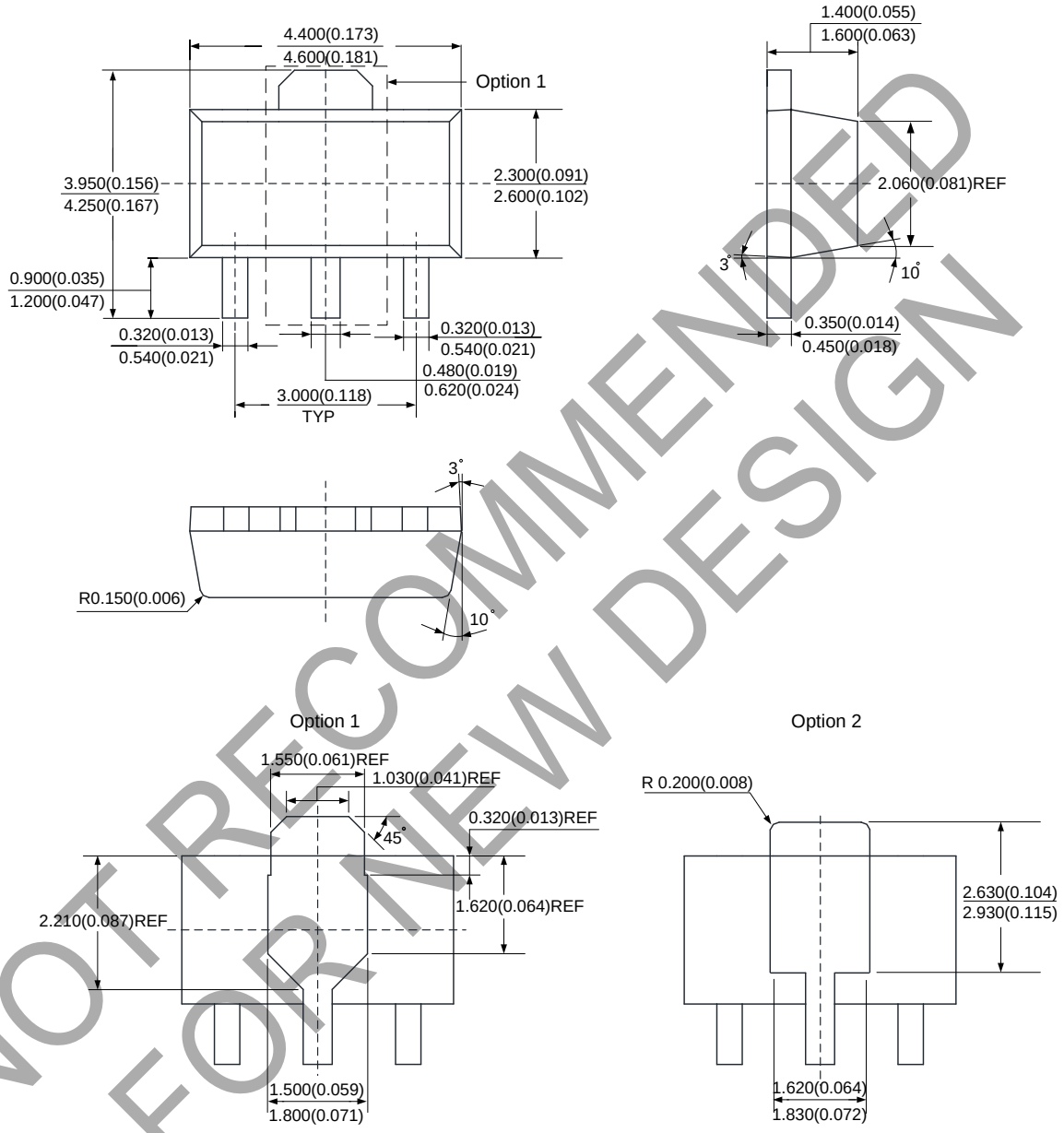

NOT RECOMMENDED FOR NEW DESIGN

© Diodes Incorporated

Suggested Pad Layout

(1) Package Type: SOT-23

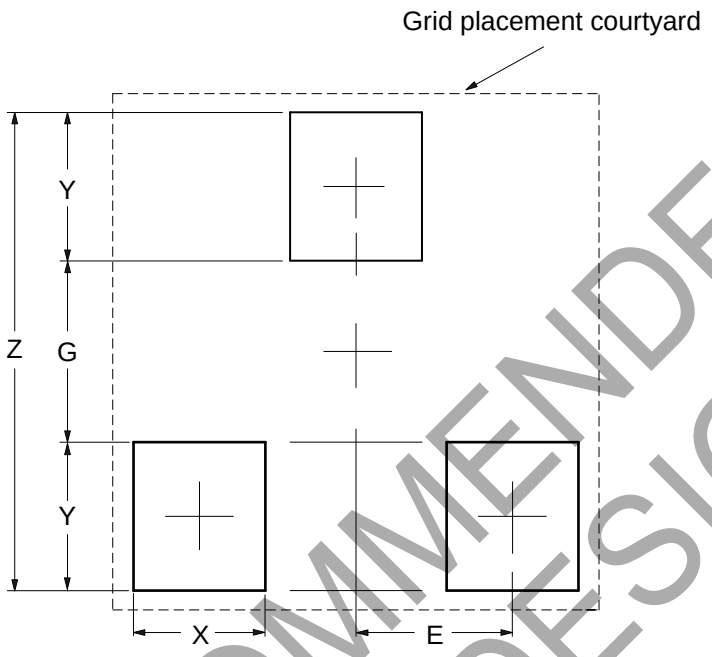

Dimensions	Z (mm)/(inch)	G (mm)/(inch)	X (mm)/(inch)	Y (mm)/(inch)	E (mm)/(inch)
Value	2.900/0.114	1.100/0.043	0.800/0.031	0.900/0.035	0.950/0.037

NOT RECOMMENDED FOR NEW DESIGN

© Diodes Incorporated

Suggested Pad Layout (Cont.)

(2) Package Type: SOT-89

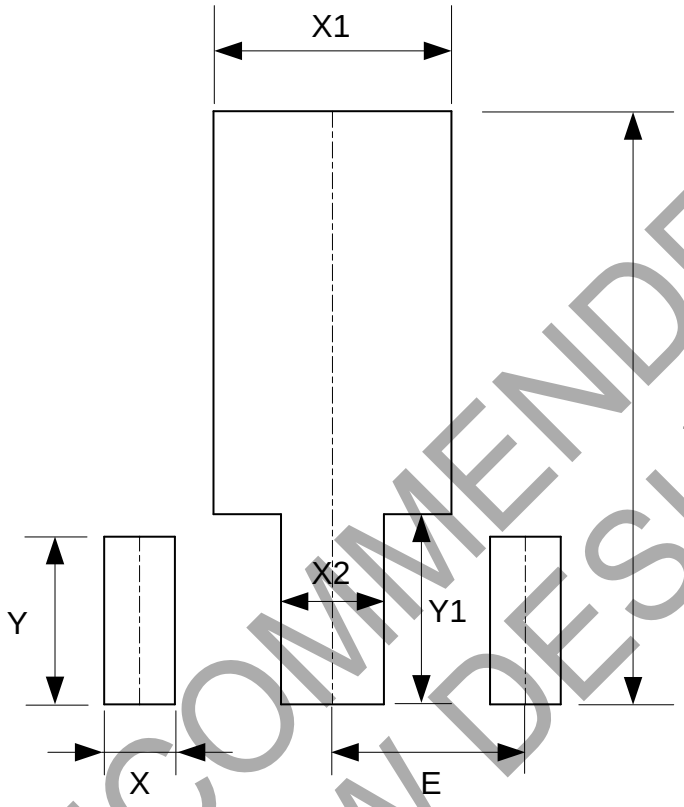

Dimensions	Z (mm)/(inch)	X (mm)/(inch)	X1 (mm)/(inch)	X2 (mm)/(inch)	Y (mm)/(inch)	Y1 (mm)/(inch)	E (mm)/(inch)
Value	4.600/0.181	0.550/0.022	1.850/0.073	0.800/0.031	1.300/0.051	1.475/0.058	1.500/0.059

NOT RECOMMENDED FOR NEW DESIGN

© Diodes Incorporated

IMPORTANT NOTICE

DIODES INCORPORATED MAKES NO WARRANTY OF ANY KIND, EXPRESS OR IMPLIED, WITH REGARDS TO THIS DOCUMENT, INCLUDING, BUT NOT LIMITED TO, THE IMPLIED WARRANTIES OF MERCHANTABILITY AND FITNESS FOR A PARTICULAR PURPOSE (AND THEIR EQUIVALENTS UNDER THE LAWS OF ANY JURISDICTION).

Diodes Incorporated and its subsidiaries reserve the right to make modifications, enhancements, improvements, corrections or other changes without further notice to this document and any product described herein. Diodes Incorporated does not assume any liability arising out of the application or use of this document or any product described herein; neither does Diodes Incorporated convey any license under its patent or trademark rights, nor the rights of others. Any Customer or user of this document or products described herein in such applications shall assume all risks of such use and will agree to hold Diodes Incorporated and all the companies whose products are represented on Diodes Incorporated website, harmless against all damages.

Diodes Incorporated does not warrant or accept any liability whatsoever in respect of any products purchased through unauthorized sales channel. Should Customers purchase or use Diodes Incorporated products for any unintended or unauthorized application, Customers shall indemnify and hold Diodes Incorporated and its representatives harmless against all claims, damages, expenses, and attorney fees arising out of, directly or indirectly, any claim of personal injury or death associated with such unintended or unauthorized application.

Products described herein may be covered by one or more United States, international or foreign patents pending. Product names and markings noted herein may also be covered by one or more United States, international or foreign trademarks.

This document is written in English but may be translated into multiple languages for reference. Only the English version of this document is the final and determinative format released by Diodes Incorporated.

LIFE SUPPORT

Diodes Incorporated products are specifically not authorized for use as critical components in life support devices or systems without the express written approval of the Chief Executive Officer of Diodes Incorporated. As used herein:

A. Life support devices or systems are devices or systems which:

1. are intended to implant into the body, or
2. support or sustain life and whose failure to perform when properly used in accordance with instructions for use provided in the labeling can be reasonably expected to result in significant injury to the user.

B. A critical component is any component in a life support device or system whose failure to perform can be reasonably expected to cause the failure of the life support device or to affect its safety or effectiveness.

Customers represent that they have all necessary expertise in the safety and regulatory ramifications of their life support devices or systems, and acknowledge and agree that they are solely responsible for all legal, regulatory and safety-related requirements concerning their products and any use of Diodes Incorporated products in such safety-critical, life support devices or systems, notwithstanding any devices- or systems-related information or support that may be provided by Diodes Incorporated. Further, Customers must fully indemnify Diodes Incorporated and its representatives against any damages arising out of the use of Diodes Incorporated products in such safety-critical, life support devices or systems.

Copyright © 2017, Diodes Incorporated

www.diodes.com

NOT RECOMMENDED FOR NEW DESIGN

Компания «ЭлектроПласт» предлагает заключение долгосрочных отношений при поставках импортных электронных компонентов на взаимовыгодных условиях!

Наши преимущества:

- Оперативные поставки широкого спектра электронных компонентов отечественного и импортного производства напрямую от производителей и с крупнейших мировых складов;
- Поставка более 17-ти миллионов наименований электронных компонентов;
- Поставка сложных, дефицитных, либо снятых с производства позиций;
- Оперативные сроки поставки под заказ (от 5 рабочих дней);
- Экспресс доставка в любую точку России;
- Техническая поддержка проекта, помощь в подборе аналогов, поставка прототипов;
- Система менеджмента качества сертифицирована по Международному стандарту ISO 9001;
- Лицензия ФСБ на осуществление работ с использованием сведений, составляющих государственную тайну;
- Поставка специализированных компонентов (Xilinx, Altera, Analog Devices, Intersil, Interpoint, Microsemi, Aeroflex, Peregrine, Syfer, Eurofarad, Texas Instrument, Miteq, Cobham, E2V, MA-COM, Hittite, Mini-Circuits,General Dynamics и др.);

Помимо этого, одним из направлений компании «ЭлектроПласт» является направление «Источники питания». Мы предлагаем Вам помощь Конструкторского отдела:

- Подбор оптимального решения, техническое обоснование при выборе компонента;
- Подбор аналогов;
- Консультации по применению компонента;
- Поставка образцов и прототипов;
- Техническая поддержка проекта;
- Защита от снятия компонента с производства.

Как с нами связаться

Телефон: 8 (812) 309 58 32 (многоканальный)
Факс: 8 (812) 320-02-42
Электронная почта: org@eplast1.ru
Адрес: 198099, г. Санкт-Петербург, ул. Калинина, дом 2, корпус 4, литера А.