# TA Series

## Power Chip
## Thick Film on Alumina Substrate

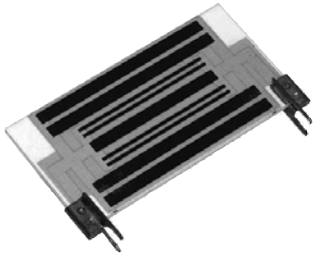

Ohmite's original Power Chip resistors feature our thick film on alumina substrate technology. These planar packages yield space saving, 10W/in$^2$ power densities that require over 50% less board space than other radial packages. Convection cooling is maximized by the planar package configuration which dissipates heat well above board level.

Ohmite's power chip resistors have a 125% higher operating temperature range than competitive product of similar design. High temperature solder and in-process plating keep terminations secure under self-heating effects by preventing re-flow from full power operation.

Flexible packaging schemes make these resistors ideal for power supplies, audio amplifiers, video fly-back, and other power control applications.

## FEATURES

- High-Temp Terminal Construction
- Wide Resistance Range
- Low Inductance (50nH-100nH)
- High Power Density
- Easy to install. PC-mountable

## SERIES SPECIFICATIONS

| Series | Wattage | Series | Wattage | Series | Wattage | Series | Wattage | Series | Wattage |
|---|---|---|---|---|---|---|---|---|---|
| TA203 | 3.0 | TA205 | 5.0 | TA207 | 7.5 | TA310 | 10.0 | TA025 | 25.0 |
| TA303 | 3.0 | TA305 | 5.0 | TA307 | 7.5 | TA810 | 10.0 | TA050 | 50.0 |
| | | TA605 | 5.0 | | | | | TA100 | 100.0 |
| | | TA805 | 5.0 | | | | | | |

## CHARACTERISTICS

| | |
|---|---|
| **Substrate** | Alumina |
| **Resistor** | Thick Film |
| **Coating** | Glass |
| **Terminals** | Solder Plated Phosphor Bronze |
| **Temperature Coefficient** | 1 ohm: 450 ppm/°C<br>1 to 100Ω: 100 ppm/°C<br>101Ω and up: 50 ppm/°C |
| **Tolerance** | ±1%, ±5% and ±10% |
| **Power Rating** | Based on 25°C free air |
| **Resistance Range** | 0.25 ohm to 10M ohm. Consult factory for other values |
| **Maximum Operating Voltage** | 350 VAC, 500 VDC through glass, 1000 VAC, 1500 VDC through substrate, not to exceed power rating |
| **Overload** | Five times rated power, as long as the one second average dissipation does not exceed the wattage rating. ΔR: ±2%, 2000 hours |
| **Derating** | 100% @ 25°C to 0% @ 180°C ambient. |
| **Equivalent Parallel Capacitance** | 1.0pf (100 MHz) |
| **Withstanding Voltage** | 5000V thru back side |
| **Operating Temperature Range** | -55°C to +180°C |
| **Overload Current** | 20 x rated current up to 8 ms (ΔR ± 0.5%) |

| Test | Test Condition MILR83401 | Specification |
|---|---|---|
| **Life (Rated Power)** | 40°C, rated power, 90 min ON 30 min OFF, 1000 hrs. | ΔR ±( 1.0% + 0.05Ω) |
| **Life (Moisture Load)** | 60°C, 90 - 95% RH, rated power, 90 min ON 30 min OFF, 1000 hrs. | ΔR ±( 1.0% + 0.05Ω) |
| **Temperature Cycling** | Room temp > -55°C 30 min > RT 10 min ± 120°C 30 min > RT10 min 5 cycles | ΔR ±( 0.25% + 0.05Ω) |
| **Flammability** | UL94V-O rated (not recognized) | |
| **Soldering Heat** | 350°C Solderpot, 3 secs. | ΔR ±( 0.25% + 0.05Ω) |
| **Insulation Resistance** | DC 100V, 1 min | Over 1000M ohm |

(continued)

rev 6/18-1

# TA Series

## Power Chip
## Thick Film on Alumina Substrate

## DIMENSIONS

(±.020 in. / ±.508mm)

***PA***
*3, 5, 7.5*
*& 10 watt*

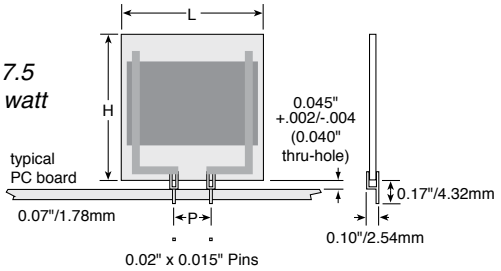


***PW***
*10, 25, 50*
*& 100 watt*

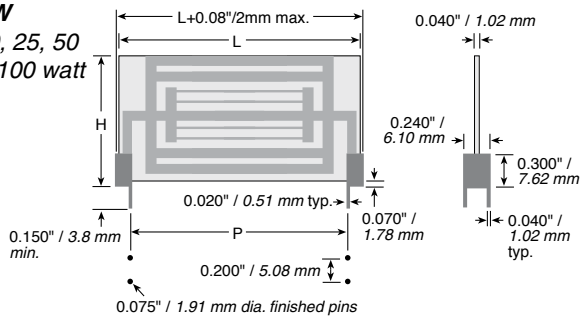


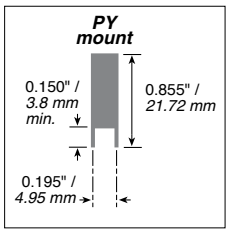


| Series | Wattage | P | Length L | Height H |
|---|---|---|---|---|
| TA203PA | 3.0 | 0.200 / 5.08 | 0.50 / 12.70 | 0.60 / 15.24 |
| TA303PA | 3.0 | 0.300 / 7.62 | 0.50 / 12.70 | 0.60 / 15.24 |
| TA205PA | 5.0 | 0.200 / 5.08 | 0.50 / 12.70 | 1.00 / 25.40 |
| TA305PA | 5.0 | 0.300 / 7.62 | 0.50 / 12.70 | 1.00 / 25.40 |
| TA605PA | 5.0 | 0.600 / 15.24 | 1.00 / 25.40 | 0.50 / 12.70 |
| TA805PA | 5.0 | 0.800 / 20.32 | 1.00 / 25.40 | 0.50 / 12.70 |
| TA207PA | 7.5 | 0.200 / 5.08 | 0.75 / 19.05 | 1.00 / 25.40 |
| TA307PA | 7.5 | 0.300 / 7.62 | 0.75 / 19.05 | 1.00 / 25.40 |
| TA310PA | 10.0 | 0.300 / 7.62 | 1.00 / 25.40 | 1.00 / 25.40 |
| TA310PW* | 10.0 | 0.300 / 7.62 | 1.085 / 27.56 | 1.00 / 25.40 |
| TA810PA | 10.0 | 0.800 / 20.32 | 1.00 / 25.40 | 1.00 / 25.40 |
| TA810PW* | 10.0 | 0.800 / 20.32 | 1.085 / 27.56 | 1.00 / 25.40 |
| TA025PA | 25.0 | 1.90 / 48.3 | 2.220 / 56.39 | 1.170 / 29.70 |
| TA025PY* | 25.0 | 1.90 / 48.3 | 2.220 / 56.39 | 1.170 / 29.70 |
| TA050PA | 50.0 | 1.90 / 48.3 | 2.220 / 56.39 | 2.270 / 57.60 |
| TA050PY* | 50.0 | 1.90 / 48.3 | 2.220 / 56.39 | 2.270 / 57.60 |
| TA100PA | 100.0 | 4.10 / 104.1 | 4.420 / 112.27 | 2.270 / 57.60 |
| TA100PY* | 100.0 | 4.10 / 104.1 | 4.420 / 112.27 | 2.270 / 57.60 |

*10-100 watts available in PW,PA, and PY packages.

## ORDERING INFORMATION

**Pin spacing**
*(on 3-10W models only)*
2 = .2"
3 = .3"
8 = .8"

**Tolerance**
K = 10%
J = 5%
F = 1%

**RoHS compliant**

**T A 3 0 5 P A 4 K 5 0 J E**

**Series**

**Power Rating:**
03 = 3 W
05 = 5
07 = 7.5
10 = 10
025 = 25
050 = 50
100 = 100

**Package:**
PA = pin terminals, std. for 3-10 W
PW = wraparound, std. for 10-100 W
PY = high-stability wraparound

**Resistance Value (Ω)**
R250 = 0.25
10R0 = 10.0
2K00 = 2,000
45K0 = 45,000

### Standard part numbers for TA series

| Ohmic value | Part No. Prefix ➤ Suffix ▼ | TA203PA | TA303PA | TA205PA | TA305PA | TA207PA | TA310PA | TA810PW | TA025PW | TA050PW | TA100PW |
|---|---|---|---|---|---|---|---|---|---|---|---|
| 0.25 | R250J | + | ✔ | ✔ | ✔ | | | | | | |
| 1.00 | 1R00J | + | + | + | ✔ | ✔ | + | + | + | + | + |
| 1.50 | 1R50J | ✔ | ✔ | ✔ | ✔ | ✔ | + | ✔ | ✔ | ✔ | ✔ |
| 2.00 | 2R00J | + | ✔ | + | ✔ | ✔ | + | ✔ | ✔ | ✔ | ✔ |
| 4.70 | 4R70J | ✔ | ✔ | + | + | ✔ | ✔ | ✔ | ✔ | ✔ | ✔ |
| 5.00 | 5R00J | + | ✔ | ✔ | ✔ | ✔ | ✔ | + | + | + | + |
| 5.10 | 5R10J | ✔ | ✔ | ✔ | ✔ | + | ✔ | ✔ | ✔ | ✔ | ✔ |
| 7.50 | 7R50J | ✔ | ✔ | ✔ | ✔ | ✔ | + | ✔ | ✔ | ✔ | ✔ |
| 8.20 | 8R20J | ✔ | ✔ | ✔ | + | ✔ | ✔ | ✔ | ✔ | ✔ | ✔ |
| 10.00 | 10R0J | + | + | + | + | + | + | + | + | + | + |
| 11.00 | 11R0J | ✔ | ✔ | + | ✔ | ✔ | ✔ | ✔ | ✔ | ✔ | ✔ |
| 12.00 | 12R0J | + | ✔ | ✔ | ✔ | ✔ | ✔ | ✔ | ✔ | ✔ | ✔ |
| 15.00 | 15R0J | + | ✔ | ✔ | + | ✔ | ✔ | ✔ | ✔ | ✔ | ✔ |
| 20.00 | 20R0J | + | ✔ | + | + | + | + | ✔ | ✔ | ✔ | ✔ |
| 24.00 | 24R0J | ✔ | ✔ | ✔ | + | ✔ | ✔ | ✔ | ✔ | ✔ | ✔ |
| 27.00 | 27R0J | + | ✔ | ✔ | ✔ | ✔ | + | ✔ | ✔ | ✔ | ✔ |
| 33.00 | 33R0J | ✔ | ✔ | ✔ | ✔ | + | ✔ | ✔ | ✔ | ✔ | ✔ |
| 47.00 | 47R0J | + | ✔ | + | ✔ | ✔ | ✔ | ✔ | ✔ | ✔ | ✔ |

| Ohmic value | Part No. Prefix ➤ Suffix ▼ | TA203PA | TA303PA | TA205PA | TA305PA | TA207PA | TA310PA | TA810PW | TA025PW | TA050PW | TA100PW |
|---|---|---|---|---|---|---|---|---|---|---|---|
| 50.00 | 50R0J | + | + | + | + | ✔ | ✔ | + | + | + | + |
| 62.00 | 62R0J | ✔ | ✔ | ✔ | + | ✔ | ✔ | ✔ | ✔ | ✔ | ✔ |
| 68.00 | 68R0J | ✔ | ✔ | + | ✔ | ✔ | + | ✔ | ✔ | ✔ | ✔ |
| 75.00 | 75R0J | ✔ | ✔ | ✔ | + | ✔ | ✔ | ✔ | ✔ | ✔ | ✔ |
| 100.00 | 100RJ | + | ✔ | + | + | ✔ | + | + | + | + | + |
| 150.00 | 150RJ | ✔ | ✔ | + | ✔ | ✔ | ✔ | ✔ | ✔ | ✔ | ✔ |
| 200.00 | 200RJ | + | + | + | + | + | ✔ | ✔ | ✔ | ✔ | ✔ |
| 250.00 | 250RJ | ✔ | ✔ | ✔ | + | ✔ | ✔ | ✔ | ✔ | ✔ | ✔ |
| 270.00 | 270RJ | ✔ | ✔ | + | ✔ | ✔ | + | ✔ | ✔ | ✔ | ✔ |
| 300.00 | 300RJ | + | ✔ | + | ✔ | ✔ | ✔ | ✔ | ✔ | ✔ | ✔ |
| 470.00 | 470RJ | + | ✔ | + | ✔ | + | + | ✔ | ✔ | ✔ | ✔ |
| 500.00 | 560 | + | ✔ | + | ✔ | ✔ | ✔ | + | + | + | + |
| 620.00 | 620RJ | ✔ | ✔ | ✔ | + | ✔ | ✔ | ✔ | ✔ | ✔ | ✔ |
| 680.00 | 680RJ | ✔ | ✔ | + | ✔ | ✔ | ✔ | ✔ | ✔ | ✔ | ✔ |
| 1,000.00 | 1K00J | + | ✔ | + | ✔ | ✔ | + | + | + | + | + |
| 1,500.00 | 1K50J | ✔ | ✔ | + | + | ✔ | + | ✔ | ✔ | ✔ | ✔ |
| 1,800.00 | 1K80J | ✔ | ✔ | + | ✔ | ✔ | ✔ | ✔ | ✔ | ✔ | ✔ |
| 2,000.00 | 2K00J | + | ✔ | ✔ | + | ✔ | ✔ | ✔ | ✔ | ✔ | ✔ |

| Ohmic value | Part No. Prefix ➤ Suffix ▼ | TA203PA | TA303PA | TA205PA | TA305PA | TA207PA | TA310PA | TA810PW | TA025PW | TA050PW | TA100PW |
|---|---|---|---|---|---|---|---|---|---|---|---|
| 2,500.00 | 2K50J | ✔ | ✔ | + | ✔ | ✔ | ✔ | ✔ | ✔ | ✔ | ✔ |
| 3,000.00 | 3K00J | ✔ | ✔ | + | ✔ | ✔ | + | ✔ | ✔ | ✔ | ✔ |
| 4,000.00 | 4K00J | ✔ | ✔ | ✔ | + | ✔ | ✔ | ✔ | ✔ | ✔ | ✔ |
| 4,700.00 | 4K70J | ✔ | ✔ | + | + | + | ✔ | ✔ | ✔ | ✔ | ✔ |
| 5,000.00 | 5K00J | ✔ | ✔ | ✔ | + | ✔ | ✔ | ✔ | ✔ | ✔ | ✔ |
| 5,100.00 | 5K10J | ✔ | ✔ | + | ✔ | ✔ | + | ✔ | ✔ | ✔ | ✔ |
| 7,500.00 | 7K50J | ✔ | ✔ | + | ✔ | ✔ | + | ✔ | ✔ | ✔ | ✔ |
| 10,000.00 | 10K0J | + | ✔ | + | + | + | + | + | + | ✔ | ✔ |
| 15,000.00 | 15K0J | ✔ | ✔ | ✔ | + | ✔ | ✔ | ✔ | ✔ | ✔ | ✔ |
| 18,000.00 | 18K0J | ✔ | + | ✔ | + | ✔ | ✔ | ✔ | ✔ | ✔ | ✔ |
| 20,000.00 | 20K0J | ✔ | ✔ | + | ✔ | + | + | ✔ | ✔ | ✔ | ✔ |
| 30,000.00 | 30K0J | ✔ | ✔ | + | ✔ | ✔ | ✔ | ✔ | ✔ | ✔ | ✔ |
| 39,000.00 | 39K0J | ✔ | ✔ | ✔ | + | ✔ | ✔ | ✔ | ✔ | ✔ | ✔ |
| 50,000.00 | 50K0J | ✔ | ✔ | ✔ | + | ✔ | ✔ | ✔ | ✔ | ✔ | ✔ |
| 75,000.00 | –75K0J | ✔ | ✔ | + | ✔ | ✔ | ✔ | ✔ | ✔ | ✔ | ✔ |
| 100,000 | 100KJ | + | + | + | ✔ | ✔ | ✔ | ✔ | ✔ | ✔ | ✔ |
| 150,000 | 150KJ | + | ✔ | ✔ | ✔ | ✔ | ✔ | ✔ | ✔ | ✔ | ✔ |
| 200,000 | 200KJ | ✔ | + | ✔ | ✔ | ✔ | ✔ | ✔ | ✔ | ✔ | ✔ |

+ = Most popular standard values, ✔ = Stock values

Компания «ЭлектроПласт» предлагает заключение долгосрочных отношений при поставках импортных электронных компонентов на взаимовыгодных условиях!

Наши преимущества:

- Оперативные поставки широкого спектра электронных компонентов отечественного и импортного производства напрямую от производителей и с крупнейших мировых складов;
- Поставка более 17-ти миллионов наименований электронных компонентов;
- Поставка сложных, дефицитных, либо снятых с производства позиций;
- Оперативные сроки поставки под заказ (от 5 рабочих дней);
- Экспресс доставка в любую точку России;
- Техническая поддержка проекта, помощь в подборе аналогов, поставка прототипов;
- Система менеджмента качества сертифицирована по Международному стандарту ISO 9001;
- Лицензия ФСБ на осуществление работ с использованием сведений, составляющих государственную тайну;
- Поставка специализированных компонентов (Xilinx, Altera, Analog Devices, Intersil, Interpoint, Microsemi, Aeroflex, Peregrine, Syfer, Eurofarad, Texas Instrument, Miteq, Cobham, E2V, MA-COM, Hittite, Mini-Circuits,General Dynamics и др.);

Помимо этого, одним из направлений компании «ЭлектроПласт» является направление «Источники питания». Мы предлагаем Вам помощь Конструкторского отдела:

- Подбор оптимального решения, техническое обоснование при выборе компонента;
- Подбор аналогов;
- Консультации по применению компонента;
- Поставка образцов и прототипов;
- Техническая поддержка проекта;
- Защита от снятия компонента с производства.

**Как с нами связаться**

**Телефон:** 8 (812) 309 58 32 (многоканальный)
**Факс:** 8 (812) 320-02-42
**Электронная почта:** org@eplast1.ru
**Адрес:** 198099, г. Санкт-Петербург, ул. Калинина, дом 2, корпус 4, литера А.